Polyseam®

Intelligent Chemistry.

PASSIVE FIRE PROTECTION.

A TECHNICAL HANDBOOK TO FIRE STOPPING OF SERVICE PENETRATIONS

Protecta®

The best choice to protect against the spread of fire

Foreword

The contribution to building protection by installed fire stopping products is often underestimated by businesses. The media very rarely reports on the reduction in the effects of fires in compartmentalised buildings, even though thousands of lives and the buildings themselves are saved each year. I guess there's nothing to write about when the destructive impact of a fire is prevented. Compartmentalisation works by preventing fire spreading and causing horrendous injury or death to human beings or animals and untold damage to buildings. One often reads about the heroics of fire departments or that the fire was arrested by the sprinkler system but rarely is it attributed to compartmentalisation. Why is that? Is it too complicated to be considered? Of course not, it is an easy and cost effective way to protect a building against the spread of smoke and fire. I wrote this book to demonstrate the ease and effectiveness of compartmentalisation, and to raise awareness of the short movies showing the installation in real time (available on YouTube, just search for Protecta).

Time is the reason compartmentalisation is the most effective method to use against fire spread today. A fire can spread so quickly that it is impossible for any fire department to quickly extinguish it without causing large scale damage to the building. Fire can spread so fast in residential homes that the whole house can burn down before the fire department arrives. Isolating rooms where fires are more likely, reduces the effects of fire on the rest of the building and increases the time the fire fighters have to put it out before it spreads. A fire compartment can be designed to restrain a fire for 60 minutes, which could be sufficient time to evacuate the building safely, for the fire department to arrive and to extinguish the fire, that is if the fire does not burn out on its own due to lack of oxygen, material, or both. Compartmentalisation is not the only consideration. Compartmentalisation of rooms where fires are likely should also take into account where the occupants are located, and their numbers; the types of activities being performed on the premises; the fire evacuation route; the fire alarm system and other systems linked to the fire alarm. This is evident in the designs the architect has incorporated into our new factory which were built in Huddersfield city centre. Without my important modifications to the original plans, the whole site would be exposed to unnecessary and preventable risk from fire and the following consequences: employees would be exposed to the dangers of an evacuation through smoke filled corridors that would disorientate and impede the evacuation leading to possible loss of life; the building itself would be unusable and even unsafe and could be condemned; the business would lose its manufacturing capability leading to loss of business in the short term and/or even the possible closure in the long term.

Polyseam has for the last 26 years developed products to simplify the installation of fire stopping of service penetrations. Solutions to problems do not have to be complicated, expensive and time-consuming, instead Polyseam offers simple solutions designed and tested in apertures and services as installed in real situations and solved through complicated chemistry. Who are we to tell the construction business how to insulate a pipe, or cut a hole in a gypsum wall? No! It is better for the construction business to have solutions adapted to meet their requirements for products, installation and performance.

I truly hope this handbook, and all the other things we are doing, can be useful so that we build safely in the future.

Kjetil Bogstad
Handbook editor & CEO of Polyseam

Content

Which products should be used where?

In most cases, the type of product chosen depends on the size and configuration of the seal or aperture to be fire protected, the construction type and the type of services (if any) that penetrates the construction. This can be simplified by saying that where there are no gaps or gaps less than 10mm, the putty cord product or collars are used, small gaps above 10mm a sealant is normally used and for larger apertures the board and mortar products are used. These solutions are given in general in the two following tables, and the details are given in the technical appendixes found in this handbook, which can easily be located using the index on the last pages.

Typical sample of penetrating services with gap widths between 0 and 10mm

Typical sample of penetrating services with gap widths between 10 and 30mm

Typical sample of penetrating services with gaps above 30mm or mixed services

Product Selector - Linear Seals

Properties	Construction	Seal Size	Product
Normal	Walls and floors	Up to 100mm wide	Protecta FR Acrylic
Water proof and high movement		Up to 30mm wide	Protecta FR IPT
Extra wide with some movement	Walls	Up to 1,200mm wide	Protecta FR Board
	Floors	Up to 800mm wide	
Extra wide and loadbearing		Up to 800mm wide	Protecta EX Mortar

Product Selector - Penetrating Services

Seal Size	Construction	Services	Protecta Product(s)
Gap between 0 and 10mm	Walls and floors	Cables	FR Putty Cord
		Metal pipes; un-insulated or mineral wool insulations	
		Metal pipes; combustible insulations	FR Collar
		Plastic pipes	
		Ventilation ducts	FR Putty Cord & FR Damper
Gap between 10 and 30mm		Cables	FR Acrylic
		Metal pipes; un-insulated or mineral wool insulations	
		Metal pipes; combustible insulations	FR Acrylic & FR Graphite
		Plastic pipes	FR Acrylic, FR Graphite or FR Collar
		Ventilation ducts	FR Acrylic & FR Damper
Gap above 30mm and mixed services	Walls	Cables and cable trays	FR Board
		Metal pipes; un-insulated or mineral wool insulations	
		Metal pipes; combustible insulations	FR Board & FR Pipe Wrap
		Plastic pipes	
		Ventilation ducts	FR Board & FR Damper
	Floors	Cables and cable trays	EX Mortar
		Metal pipes; un-insulated or mineral wool insulations	
		Metal pipes; combustible insulations	EX Mortar & FR Pipe Wrap
		Plastic pipes	
		Ventilation ducts	EX Mortar & FR Damper

General rules to fire classifications

Aperture sizes and allowed services

The technical drawings in this handbook show the maximum size allowed of any aperture or linear seal as tested, and as shown also in the product's installation instructions. The maximum allowed cross sectional area of a rectangular aperture, can be used to calculate the maximum allowed cross sectional area of a circular aperture. To calculate the maximum allowed cross sectional area of a circular aperture, simply calculate the size in for instance cm^2 and then use this to calculate the allowed diameter (Ø):

A rectangular aperture of 1200 x 2400mm would have a cross sectional area (A) 28,800cm^2
radius = √(A/Π) = √(28,800/3,14) = √9172 = 96cm
Ø = radius x 2 = 96x2 = <u>Ø192cm</u>

An approval for a circular aperture is not allowed to be used in a rectangular aperture. The total amount of cross sectional area occupied by services (including insulation) should not exceed 60% of the penetration cross sectional area.

Additional aperture sizes in floors

Under EN 1366-3 rules, results from tests in floors with a penetration seal length of minimum 1m apply to any length as long as perimeter length to seal area ratio is not smaller than that of the test specimen. The following aperture sizes are therefore allowed where 2400 x 1200 mm is described in this handbook and in the products installation instructions.

Maximum Aperture Sizes within Floors or between Floors and Walls
1200 mm width x 2400 mm length (tested)
1100 mm width x 2900 mm length (allowed)
1000 mm width x 4000 mm length (allowed)
900 mm width x 7000 mm length (allowed)
≤ 800 mm width x ∞ (infinite) length (allowed)

Service sizes

The test standard (EN1366-3) groups services to be tested for approval. For instance, all cables in the group up to a certain diameter must be tested otherwise, approval is only granted for the exact specimen tested, and this has no practical value.

For cables, there are many groups to test to obtain full approval. For example to obtain approval for all cables up to 21mm diameter, it is necessary to test the following cables: type A1, A2, A3 (A cables are 5 x 1.5mm^2) and B (1 x 95mm^2). The position of the cables in the test is also subject to how the cables are allowed to be positioned in practical. The testing of cables on cable trays normally consists of 4 cable trays packed with different types of cables, wires and conduits.

Our specifications for installation are simplified to allow the installation to be performed correctly and with the least complexity, however testing to achieve the specifications is anything but simple. In general we specify service sizes with the symbol ≤ in front. Without this symbol, the size of the service is exactly as specified. The same can be said for pipes. For metal pipes testing consists of a certain design group which includes pipe diameter and wall thickness. However, where we do not specify this, it is because we have tested all the different wall thicknesses available. For plastic pipes testing also includes the different plastics, eg: PVC, PE and so on.

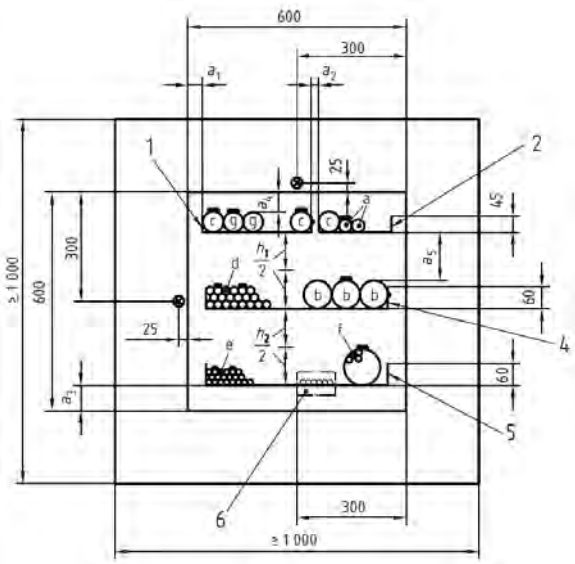

Example of standard configuration for cable penetration systems according to EN 1366-3

Fire classifications; what do they mean?

In Europe we all use the same system to classify fire resistance, not only in fire stop seals, but also in walls, floors, doors and so on. In fire stopping, only a few letters are used to indicate the result and what protection the installation gives.

E - Integrity, the time it takes for fire to physically spread through a fire seal. At the point of failure one can see the glow of the fire through the seal, flames coming through or via a cotton pad which catches fire when held close to the seal by the test technician. This is the simplest classification to achieve.

I - Insulation, the temperature, measured on the non-fire side has increased by 180°C on either the fire seal or the services. This is measured through many thermocouples placed in strategic locations. The intention is to replicate the lowest possible temperature that can actually start a fire, even though the fire itself has not passed through the fire seal. This is the more difficult classification to achieve.

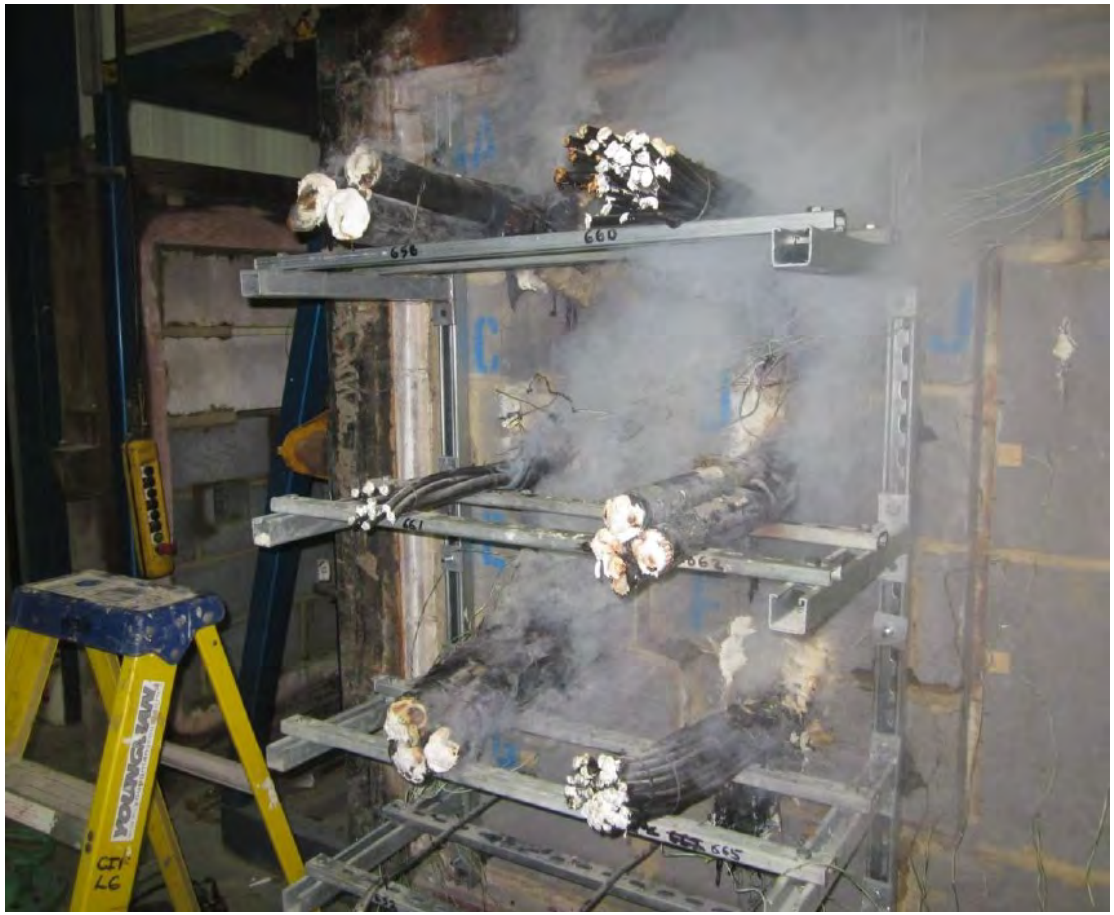

Picture shows a fire test after 2 hours at BM Trada in UK

In most European countries, there is a demand that the fire classification should include both integrity E and insulation I. However, if the fire seal is in an area where no combustible material are close by, and no combustible materials are likely to be placed closed by, an engineering judgment could be taken to approve usage of the integrity classification only. This is why we state both classifications in this handbook.

The letters are followed by a number, which is how long in minutes the integrity and insulation were maintained. For instance, the classification **E 60** is integrity for one hour, whilst **EI 120** is both integrity and insulation for two hours.

Pipe end configurations

When testing pipes, one can choose not to cap (or close) or to cap the pipe inside or outside the furnace. The configuration chosen depends on the intended application of the pipe and/or the installation environment. The code defining if a pipe is capped is stated after the fire classification. For instance EI 60 C/U means the pipe was capped inside the furnace, and uncapped outside the furnace.

Field of application rules for pipe end configuration:

		Tested			
		U/U	C/U	U/C	C/C
Covered	U/U	-	NO	NO	NO
	C/U	YES	-	NO	NO
	U/C	YES	YES	-	NO
	C/C	YES	YES	YES	-

Our engineering judgment based on EN 1366-3:2009:

Intended use of pipe		Pipe end condition
Rainwater pipe, plastic	At drainage	U/U [1)]
	Not at drainage	C/C [2)]
Drainage or sewage pipe, plastic	Ventilated drain	U/U [1)]
	Unventilated drain	U/C [1)]
	Drain w/water trap	U/C [1)]
	Not at drainage	C/C [2)]
Pipe in closed circuit (water, gas, air, electricity etc.)		C/C [2) 3)]
Flue gas recovery system pipe, plastic		U/C [1)]
Pipe with open ends and ≥ 50cm length on both sides, plastic		U/U [2)]
Pipe supported by suspension system, metal	Fire rated support	C/U [1)]
	Non-fire rated	U/C [1)]
Waste disposal shaft pipe, metal		U/C [1)]

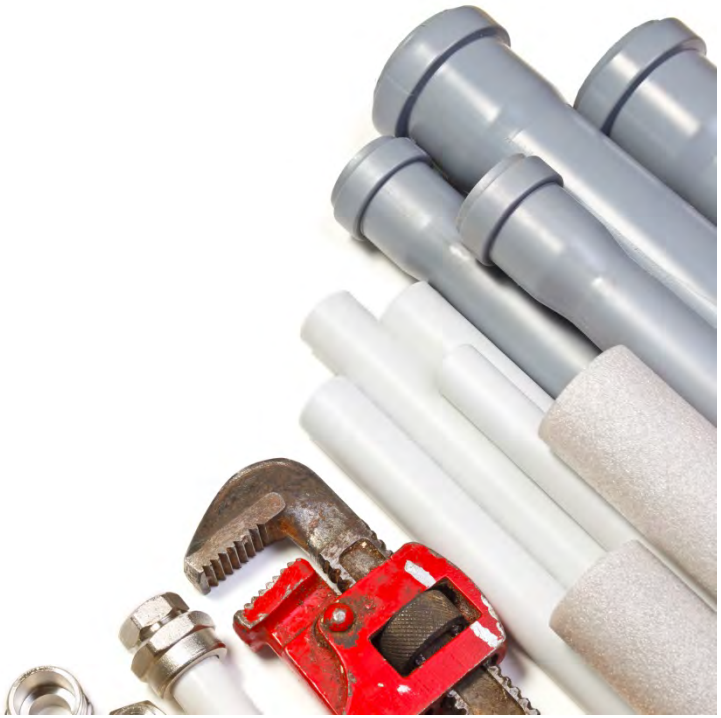

[1)] Stated in EN 1366-3:2009. [2)] Polyseam' s judgment based on tests. [3)] Metal pipes should have fire rated support.

Surrounding constructions

The wall or floor construction used in a test will limit the scope of certification. The general rule is that the wall or floor thickness tested will be the minimum allowed thickness of the wall or floor. Also, if a gypsum (flexible) wall is tested then approvals for a concrete/masonry wall are also obtained, but not the other way around. So if only concrete/masonry walls have been tested, the test data cannot be used for a gypsum wall. Certifications for floors are only possible by performing floor tests, and this test data cannot be used to obtain certification for walls.

The standard **flexible wall** constructions specified in the test standard are:

Nominal minimum overall thickness in mm	Thickness of gypsum board EN 520 Type F in mm	Number of layers each side	Indicative fire resistance in minutes
69 - 75	12.5	1	30
94 - 100	12.5	2	60
94 - 100	12.5	2	90
122 - 130	15.0	2	120

The standard **rigid wall** constructions specified in the test standard are:

Thickness of aerated concrete (650 +/- 200) kg/m^3 in mm	Indicative fire resistance in minutes
75 +/- 10	30
100 +/- 10	60
125 +/- 10	90
150 +/- 10	120
175 +/- 10	180
200 +/- 10	240

The standard construction for **concrete floors** shall have a density of (650 +/- 200) kg/m^3 and a thickness of 150mm.

Supporting constructions and service supports

The supporting constructions (fire rated walls and floors) should be classified in accordance with EN 13501-2 for the required fire resistance period.

Services in floors should have the first support located 250mm from the top face, and services in walls should have the first support located 270mm from both faces of the wall. Thereafter the services should be supported according to the support system manufacturer's installation instructions.

Mixed services within the same aperture

The systems, Protecta FR Board and Protecta EX Mortar, may be used to provide a penetration seal with cables, cable trays, metallic pipes, ventilation ducts, composite pipes and plastic pipes, with and without insulation, with mixed services within the same seal/aperture. The technical solutions in the following pages can be combined where the fire seals are built the same, however, the fire and sound classifications will for the whole seal be no better than the lowest classification given on any through service, what we term 'worst-case-scenario'.

The technical solutions on the last pages of this handbook are for mixed services, but do not include all the different options and are provided as a quick guide. Here you can select the fire resistance and see what fire stopping system you require for a whole group of services, this simplifies the engineering and is of course very useful and helpful.

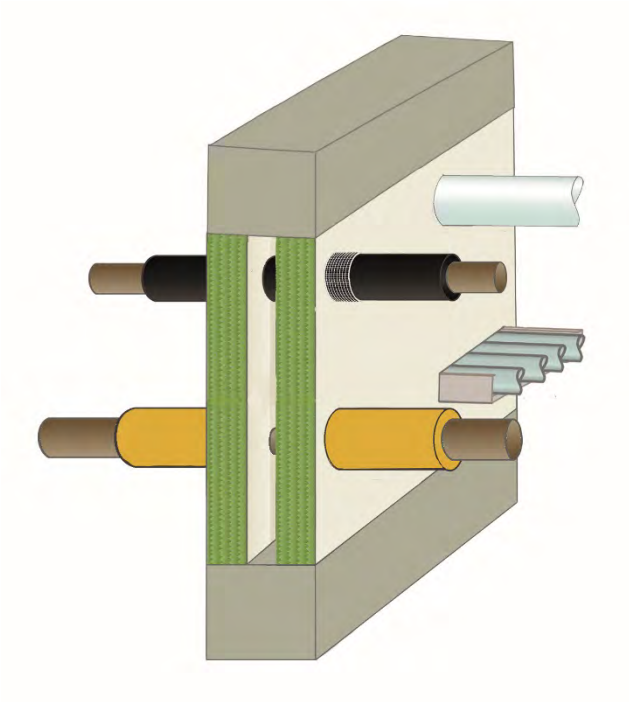

Normal on-site problems and solutions

Single sided access

On construction sites there may be cases where an aperture for a fire seal that is to be installed is only accessible from one side. With many of the Protecta® products this scenario is already tested, certified and included in this handbook, but one issue is the Protecta FR Board system which requires the sealing of gaps from both sides of a wall after insertion. However this is solvable by using an additional inner board with the coating facing towards the installer; it will result in the same fire seal as the certified solutions. Below are the detailed descriptions and this is especially useful with risers or shafts with gypsum boards on only one side.

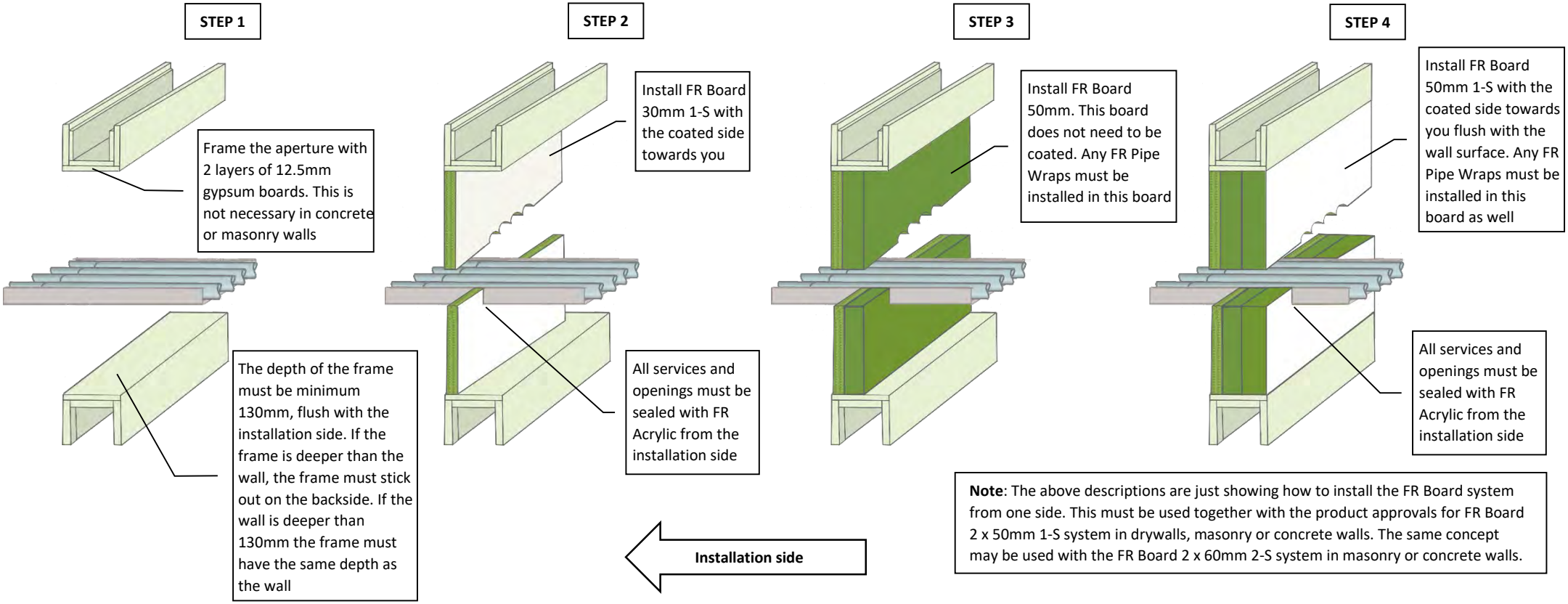

Note: The above descriptions are just showing how to install the FR Board system from one side. This must be used together with the product approvals for FR Board 2 x 50mm 1-S system in drywalls, masonry or concrete walls. The same concept may be used with the FR Board 2 x 60mm 2-S system in masonry or concrete walls.

Restrictive fire seals and the pattress solution

Some fire seals in walls can be restrictive, so it is difficult to insert the different pieces of the Protecta FR Board. Therefore Polyseam has tested a pattress system, where the boards are installed on the surface of the wall instead of inside the aperture. This is then an additional way of fixing the boards, but the fire classifications will still be limited to the different services given in this handbook, for drywalls with the system 2 x 50mm 1-S. Furthermore, any FR Pipe Wraps must be included.

There are two ways the pattress system can be installed, as follows:

System 1: The aperture located within the wall

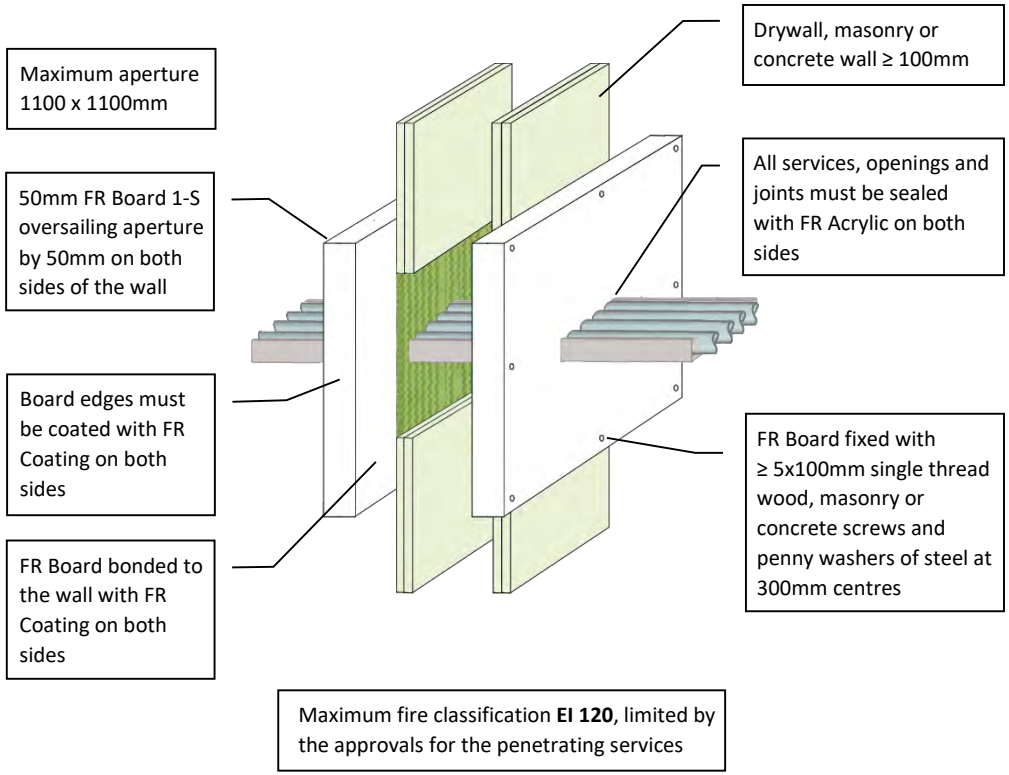

System 2: The aperture located towards the soffit

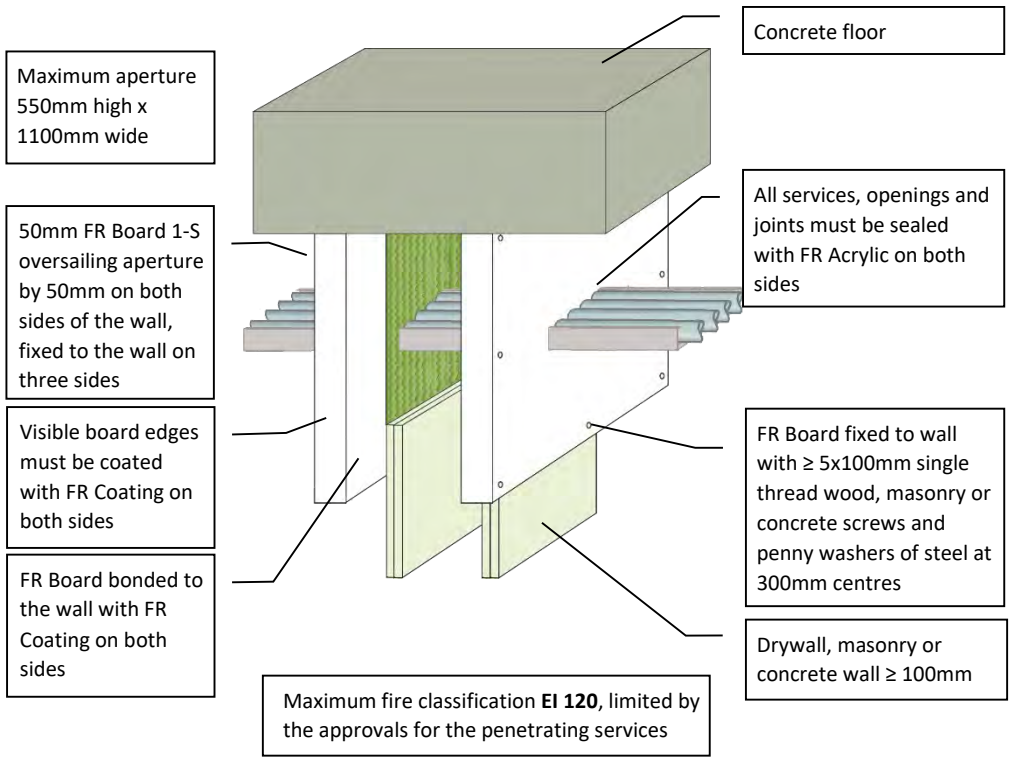

FAQ's

GENERAL

Q: *What certifications are available?*

A: The Protecta® fire stopping range has ETA certifications and the CE-mark for Europe and Africa, UL-EU International certifications for Asia and South America and local certifications for the United Arab Emirates, New Zealand and Australia.

Q: *Where are the products manufactured?*

A: The Protecta® range is manufactured at the Polyseam factory in Huddersfield, United Kingdom.

CONSTRUCTIONS

Q: *I am doing a fire seal in a drywall with calcium silicate boards and not normal gypsum boards, is that ok?*

A: Yes, as long as the wall is classified according to EN 13501-2 for the required fire resistance period, and the wall thickness is equal or greater than the approval for the fire stopping product.

Q: *I have a fire seal in a floor, can I use the approvals for a drywall?*

A: No. The EuroNorm states that fire seals in floors have to be tested and approved independently from walls.

Q: *Can approvals for drywalls be used in concrete walls?*

A: Yes. The EuroNorm allows this but tests and approvals for concrete or masonry walls cannot be used in drywalls.

Q: *I have a cable going through a drywall on one side and it does not penetrate the wall, however the instructions show only double sided fire seals?*

A: Use the normal instructions for double sided seals, the wall boards on the other side will do the same job as the fire seal which will result in a double sided fire seal.

Q: *I am to do a fire seal in a swimming pool area and need something moisture proof, what should I use?*

A: For smaller seals you can use either the Protecta FR IPT sealant or the FR Putty Cord. For larger seals you can use Protecta FR Board, but after you have sealed the gaps and openings with FR Acrylic, apply a layer of FR Coating on top of the acrylic.

Q: *Can the firestop details given in concrete floors be used in timber floors?*

A: No, that is not allowed.

FIRE SEALS

Q: *Is it acceptable that instead of a minimum 100mm depth of Protecta EX mortar, I can use a 50mm stonewool slab with 50mm depth of mortar?*

A: No. But where 50mm depth of mortar on 50mm stonewool is mentioned, you can use 100mm depth of mortar instead and with no stone wool.

FAQ's

Q: *Do I need to remove a shuttering stone wool board when the shutter is not shown as part of the approval for EX Mortar in a floor?*

A: No, the shutter will only increase the fire resistance.

Q: *A solution states a 12.5mm depth of Protecta FR Acrylic on a 12.5mm backing of stonewool, can I instead seal with 25mm FR Acrylic and skip the backing?*

A: Yes, the FR Acrylic will give better fire resistance than the stonewool backing material so if the total depth is the same or greater this is ok.

Q: *There is a solution for a double sided seal with FR Acrylic at 15mm depth in a rigid wall. Can I instead seal this single sided at 30mm depth?*

A: No. The fire seal will be weaker as the penetration speed of the fire will increase during heating of the material. With a double sided fire seal the fire has to effectively 'start again' when it meets the second seal. However, as a fire stopping solution it is better to do a single sided seal on both sides, resulting in a higher fire resistance.

Q: *It is stated that I use stonewool backing with Protecta FR Acrylic, can I instead use Protecta Backing material?*

A: Yes, the Protecta backing is made of AES fibre which has greater fire resistant than stonewool. However, if Protecta Backing is stated, you cannot use a stonewool backing.

Q: *I have a special fire seal that is not mentioned in any of the solutions, what do I do?*

A: Please contact us and we will assess if we can make an Engineering Judgment.

CABLES

Q: *The instructions mention cables, but does that include all types of cables?*

A: Yes. We have tested groups of cables which gives approvals for all kinds, including aluminium, copper and fibre optic cables.

PIPES

Q: *I have a penetrating pipe made of iron, but it is not mentioned in the instructions?*

A: Iron is the base metal of steel, so use the instructions for steel pipes.

Q: *I am to fire seal a PE-HD (or HD-PE) pipe, can I use the instructions for PE pipes?*

A: Yes. You can fire seal all PE pipes that are manufactured to EN 1519-1, EN 12201-2 and EN 12666-1. This normally includes LD-PE, MD-PE, HD-PE and PE-X pipes.

FAQ's

Q: *It is stated 'alupex' pipes in the instructions; can I use Geberit Mepla MLC pipes?*

A: Yes. Alupex is a general term for composite aluminium pipes. They consist of an aluminium core that is covered on the inner and outer sides with thin plastic. Some alupex pipes on the market are:

- FRÄNKISCHE alpex F50 PROFI
- GEBERIT Mepla MLC
- JRG Sanipex MT
- KE KELIT Kelox
- REHAU Rautitan stabil
- TECEflex
- UPONOR MLC
- VIEGA Sanfix Fosta

Q: *I am to fire seal a Blazemaster cPVC pipe but I have heard it reacts with fire stopping products?*

A: Protecta FR Acrylic should be used; it has been independently tested and does not react with BlazeMaster or other cPVC pipes.

Appendix I

-

Linear seal solutions

Installation Instructions

1. Before installing Protecta® FR Acrylic ensure that the surface of all service penetrations and surrounding construction is free from all loose contaminants, dust and grease.
2. Where Protecta® FR Acrylic is to be installed against surfaces that cannot tolerate direct contact; appropriate surface preparation should be made (contact Polyseam for guidance in these cases). For paints sensitive to sealing compounds, priming with a PVA primer is recommended.
3. When installing Protecta® FR Acrylic in hollow floor slabs or boards, fire seals specified as single sided should be installed from the soffit side of the floor assuming there is sufficient thickness of concrete below the void to follow the installation guide. Where this is not the case, tubular voids should be filled with stone wool normally the same thickness as the depth of the floor slab. Alternatively, simply fire seal on both sides.
4. When installing any backing material, cut this slightly oversize and insert into the gap ensuring a tight friction fit. Ensure correct depth is achieved.
5. Fill the gap or joint with Protecta® FR Acrylic to the required depth.
6. Apply the sealant generously to prevent air bubbles. Finish the bead with a moist spatula, pallet knife or brush.
7. Protecta® FR Acrylic can be over-painted with most emulsion or alkyd (gloss) paints.

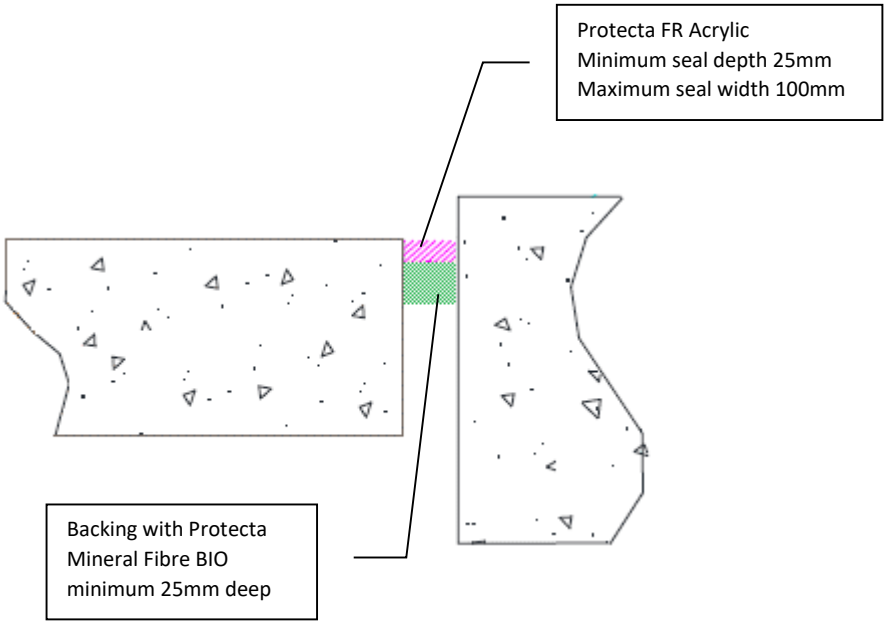

ETA 13/0879 & 13/0880

For all technical details on the products specified please refer to the technical data sheets that can be found on www.protecta.eu

Signed and approved:

Client:

Job Title:

Products	Protecta FR Acrylic Protecta Mineral Fibre BIO
Application	Fire rated linear seals in rigid floors or between floors and walls
Construction	Minimum floor thickness of 150 mm and comprise aerated concrete or concrete with a minimum density of 650kg/m^3.

Fire & Sound classification

Single sided top face position	EI 180 & E 180
Sound reduction (seal only)	62 dB

Protecta®

Polyseam Ltd, 15 St Andrews Road,
Huddersfield, West Yorkshire, HD1 6SB
Tel: +44 (0) 148 4421036
Email: post.uk@polyseam.com

Sheet size: **A4**	Drawn date & no: 24/5/18
Scale: **NTS**	Drawn by: K.B

Installation Instructions

1. Before installing Protecta® FR Acrylic ensure that the surface of all service penetrations and surrounding construction is free from all loose contaminants, dust and grease.
2. Where Protecta® FR Acrylic is to be installed against surfaces that cannot tolerate direct contact; appropriate surface preparation should be made (contact Polyseam for guidance in these cases). For paints sensitive to sealing compounds, priming with a PVA primer is recommended.
3. When installing Protecta® FR Acrylic in hollow floor slabs or boards, fire seals specified as single sided should be installed from the soffit side of the floor assuming there is sufficient thickness of concrete below the void to follow the installation guide. Where this is not the case, tubular voids should be filled with stone wool normally the same thickness as the depth of the floor slab. Alternatively, simply fire seal on both sides.
4. When installing any backing material, cut this slightly oversize and insert into the gap ensuring a tight friction fit. Ensure correct depth is achieved.
5. Fill the gap or joint with Protecta® FR Acrylic to the required depth.
6. Apply the sealant generously to prevent air bubbles. Finish the bead with a moist spatula, pallet knife or brush.
7. Protecta® FR Acrylic can be over-painted with most emulsion or alkyd (gloss) paints.

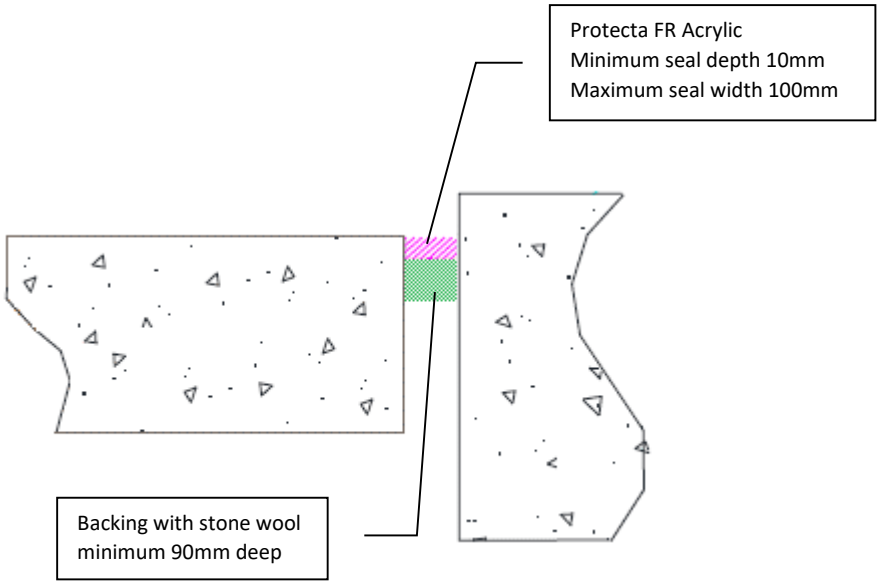

ETA 13/0879 & 13/0880

For all technical details on the products specified please refer to the technical data sheets that can be found on www.protecta.eu

Signed and approved:

Client:

Job Title:

Products	Protecta FR Acrylic Stone wool
Application	Fire rated linear seals in rigid floors or between floors and walls
Construction	Minimum floor thickness of 150 mm and comprise aerated concrete or concrete with a minimum density of 650kg/m^3.

Fire & Sound classification

Single sided top face position
EI 240 & E 240

Sound reduction (minimum 12mm depth)
62 dB

Polyseam Ltd, 15 St Andrews Road,
Huddersfield, West Yorkshire, HD1 6SB
Tel: +44 (0) 148 4421036
Email: post.uk@polyseam.com

Sheet size: **A4**	Drawn date & no: 24/5/18
Scale: **NTS**	Drawn by: K.B

Installation Instructions

1. All surfaces must be clean and sound, free from dirt, grease and other contaminants. The surfaces may be damp but not running wet. Use a wet brush to clean surfaces before application to remove loose material and to ensure good contact for adhesion. Primers are not usually required.
2. Cut nozzle to the desired angle and gun firmly into the joint to give a good solid fill. Strike off the sealant flush with the joint sides within ten minutes of application, before surface skinning occurs. The sealant will have low shrinkage during cure and if a flush surface it is recommended to leave the sealant proud.
3. Protecta® FR IPT can be tooled to a smooth finish using a moist plastic stick or similar within 30 minutes of application. IPT Tooling designed for the optimum finish is recommended instead of soap and water as it forms a film between the stick and the sealant.
4. Do not spray the sealant with water or other fluids before skin formation (<30 min). Uncured sealant is soluble in water prior to skinning due to its environmentally friendly IPT chemistry that uses water instead of solvents.
5. Protecta® FR IPT can be over-painted with most emulsion or alkyd (gloss) paints.

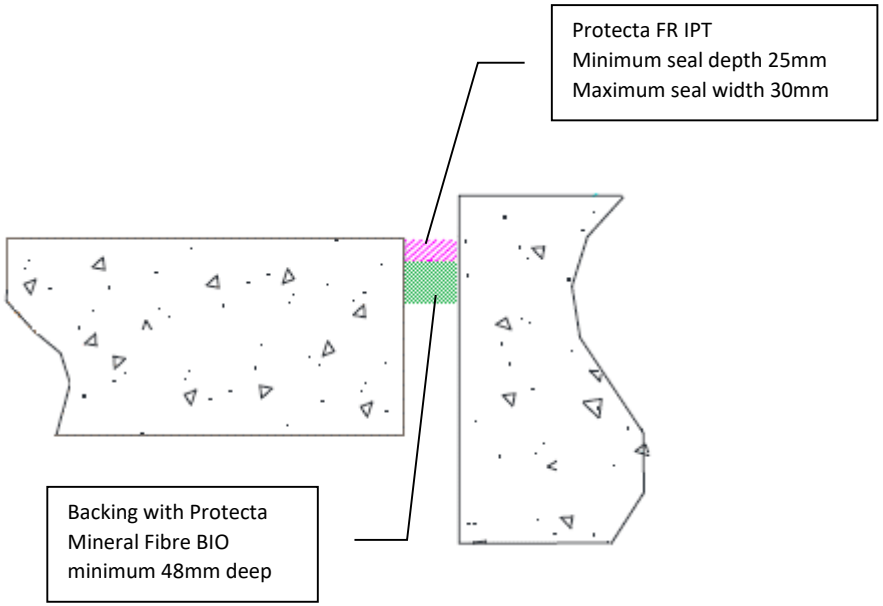

ETA 14/0041

As a part of our policy of on-going product development and testing, we reserve the right to modify, alter or change product specifications without giving notice. All information contained in this document is given in good faith and is provided for guidance only. Any drawings provided are for illustrative purposes only. As Polyseam has no control over the methods or competence of installation and of prevailing site conditions, no warranties, expressed or implied, is intended to be given as to the actual performance of the product mentioned or referred to herein and no liability whatsoever will be accepted for any loss, damage or injury arising from the use of the information given.

For all technical details on the products specified please refer to the technical data sheets that can be found on www.protecta.eu

Signed and approved:

Client:

Job Title:

Products	Protecta FR IPT Protecta Mineral Fibre BIO
Application	Fire rated, water proof and movement linear seals in rigid floors or between floors and walls
Construction	Minimum floor thickness of 150 mm and comprise aerated concrete or concrete with a minimum density of 650kg/m³.

Fire, Sealant & Sound classification

Single sided top face position
EI 180 & E 240

Classification CE
Facade (interior) 25HM
Sanitary joints XS1

Sound reduction (seal only)
62 dB

Polyseam Ltd, 15 St Andrews Road,
Huddersfield, West Yorkshire, HD1 6SB
Tel: +44 (0) 148 4421036
Email: post.uk@polyseam.com

Sheet size: **A4**	Drawn date & no: 24/5/18
Scale: **NTS**	Drawn by: K.B

Installation Instructions

1. Before installing Protecta® FR Acrylic ensure that the surface of all service penetrations and surrounding construction is free from all loose contaminants, dust and grease.
2. Where Protecta® FR Acrylic is to be installed against surfaces that cannot tolerate direct contact; appropriate surface preparation should be made (contact Polyseam for guidance in these cases). For paints sensitive to sealing compounds, priming with a PVA primer is recommended.
3. When installing Protecta® FR Acrylic in hollow floor slabs or boards, fire seals specified as single sided should be installed from the soffit side of the floor assuming there is sufficient thickness of concrete below the void to follow the installation guide. Where this is not the case, tubular voids should be filled with stone wool normally the same thickness as the depth of the floor slab. Alternatively, simply fire seal on both sides.
4. When installing any backing material, cut this slightly oversize and insert into the gap ensuring a tight friction fit. Ensure correct depth is achieved.
5. Fill the gap or joint with Protecta® FR Acrylic to the required depth.
6. Apply the sealant generously to prevent air bubbles. Finish the bead with a moist spatula, pallet knife or brush.
7. Protecta® FR Acrylic can be over-painted with most emulsion or alkyd (gloss) paints.

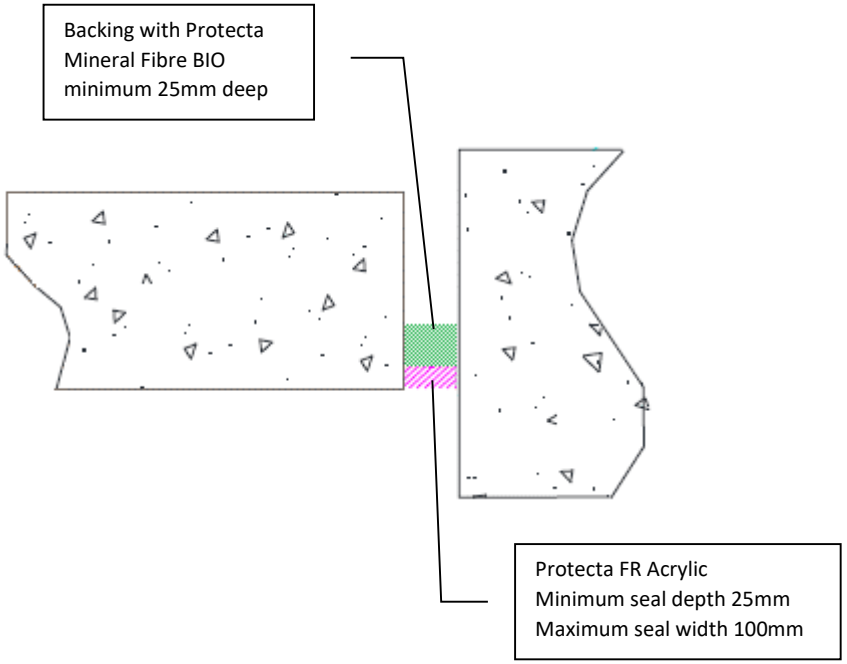

ETA 13/0879 & 13/0880

As a part of our policy of on-going product development and testing, we reserve the right to modify, alter or change product specifications without giving notice. All information contained in this document is given in good faith and is provided for guidance only. Any drawings provided are for illustrative purposes only. As Polyseam has no control over the methods or competence of installation and of prevailing site conditions, no warranties, expressed or implied, is intended to be given as to the actual performance of the product mentioned or referred to herein and no liability whatsoever will be accepted for any loss, damage or injury arising from the use of the information given.

For all technical details on the products specified please refer to the technical data sheets that can be found on www.protecta.eu

Signed and approved:

Client:

Job Title:

Products	Protecta FR Acrylic Protecta Mineral Fibre BIO
Application	Fire rated linear seals in rigid floors or between floors and walls
Construction	Minimum floor thickness of 150 mm and comprise aerated concrete or concrete with a minimum density of 650kg/m^3.

Fire & Sound classification

Single sided soffit face position	EI 60 & E 120
Sound reduction (seal only)	62 dB

Protecta®

Polyseam Ltd, 15 St Andrews Road,
Huddersfield, West Yorkshire, HD1 6SB
Tel: +44 (0) 148 4421036
Email: post.uk@polyseam.com

Sheet size: **A4**	Drawn date & no: 24/5/18
Scale: **NTS**	Drawn by: K.B

Installation Instructions

1. Before installing Protecta® FR Acrylic ensure that the surface of all service penetrations and surrounding construction is free from all loose contaminants, dust and grease.
2. Where Protecta® FR Acrylic is to be installed against surfaces that cannot tolerate direct contact; appropriate surface preparation should be made (contact Polyseam for guidance in these cases). For paints sensitive to sealing compounds, priming with a PVA primer is recommended.
3. When installing any backing material, cut this slightly oversize and insert into the gap ensuring a tight friction fit. Ensure correct depth is achieved.
4. Fill the gap or joint with Protecta® FR Acrylic to the required depth.
5. Apply the sealant generously to prevent air bubbles. Finish the bead with a moist spatula, pallet knife or brush.
6. Protecta® FR Acrylic can be over-painted with most emulsion or alkyd (gloss) paints.

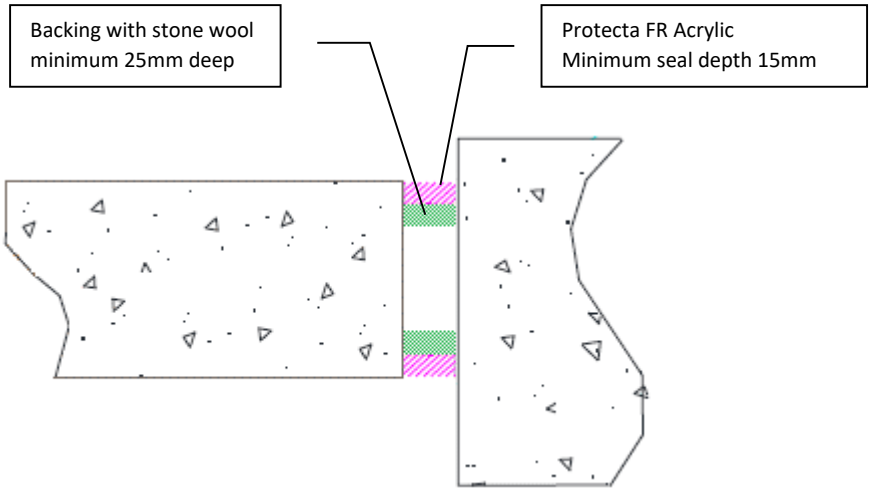

ETA 13/0879 & 13/0880

Client:

Job Title:

Products	Protecta FR Acrylic Stone wool
Application	Fire rated linear seals in rigid floors or between floors and walls
Construction	Minimum floor thickness of 150 mm and comprise aerated concrete or concrete with a minimum density of 650kg/m³.

Fire & Sound classification

Up to 100mm wide double sided seal with low density stone wool	EI 120 & E 120
Up to 100mm wide double sided seal with stone wool ≥ 140kg/m³	EI 180 & E 180
Up to 30mm wide double sided seal with low density stone wool	EI 240 & E 240
Sound reduction (seal only)	62 dB

Polyseam Ltd, 15 St Andrews Road,
Huddersfield, West Yorkshire, HD1 6SB
Tel: +44 (0) 148 4421036
Email: post.uk@polyseam.com

For all technical details on the products specified please refer to the technical data sheets that can be found on www.protecta.eu

Signed and approved:

Sheet size: **A4**	Drawn date & no: 24/5/18
Scale: **NTS**	Drawn by: K.B

Installation Instructions

1. All surfaces must be clean and sound, free from dirt, grease and other contaminants. The surfaces may be damp but not running wet. Use a wet brush to clean surfaces before application to remove loose material and to ensure good contact for adhesion. Primers are not usually required.
2. Cut nozzle to the desired angle and gun firmly into the joint to give a good solid fill. Strike off the sealant flush with the joint sides within ten minutes of application, before surface skinning occurs. The sealant will have low shrinkage during cure and if a flush surface it is recommended to leave the sealant proud.
3. Protecta® FR IPT can be tooled to a smooth finish using a moist plastic stick or similar within 30 minutes of application. IPT Tooling designed for the optimum finish is recommended instead of soap and water as it forms a film between the stick and the sealant.
4. Do not spray the sealant with water or other fluids before skin formation (<30 min). Uncured sealant is soluble in water prior to skinning due to its environmentally friendly IPT chemistry that uses water instead of solvents.
5. Protecta® FR IPT can be over-painted with most emulsion or alkyd (gloss) paints.

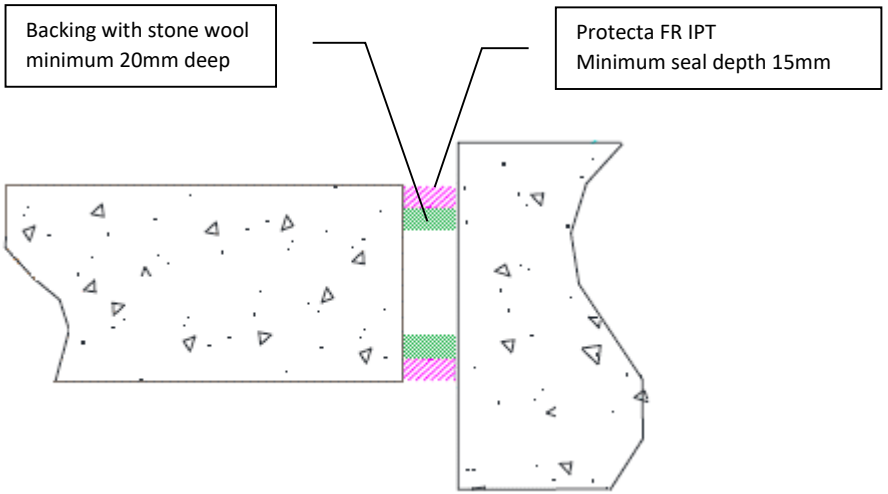

ETA 14/0041

As a part of our policy of on-going product development and testing, we reserve the right to modify, alter or change product specifications without giving notice. All information contained in this document is given in good faith and is provided for guidance only. Any drawings provided are for illustrative purposes only. As Polyseam has no control over the methods or competence of installation and of prevailing site conditions, no warranties, expressed or implied, is intended to be given as to the actual performance of the product mentioned or referred to herein and no liability whatsoever will be accepted for any loss, damage or injury arising from the use of the information given.

For all technical details on the products specified please refer to the technical data sheets that can be found on www.protecta.eu

Signed and approved:

Client:

Job Title:

Products	Protecta FR IPT Stone wool
Application	Fire rated, water proof and movement linear seals in rigid floors or between floors and walls
Construction	Minimum floor thickness of 150 mm and comprise aerated concrete or concrete with a minimum density of 650kg/m³.

Fire, Sealant & Sound classification

Up to 30mm wide double sided seal with low density stone wool

EI 240 & E 240

Classification CE

Facade (interior) 25HM
Sanitary joints XS1

Sound reduction (seal only)

62 dB

Polyseam Ltd, 15 St Andrews Road, Huddersfield, West Yorkshire, HD1 6SB
Tel: +44 (0) 148 4421036
Email: post.uk@polyseam.com

Sheet size: **A4**	Drawn date & no: 24/5/18
Scale: **NTS**	Drawn by: K.B

Installation Instructions

1. Before installing Protecta® FR Board ensure that the surrounding construction is free from all loose contaminants, dust and grease.
2. The board can be positioned to either side of the construction or anywhere in between.
3. Cut the required board(s) to suit the linear seal width. All exposed and cut edges of the board can be sealed with Protecta® FR Coating or Protecta® FR Acrylic prior to fitting which will act as an adhesive and ensure a smoke tight seal.
4. All joints, gaps or imperfections in the installed seal must be filled with Protecta® FR Acrylic on both sides.
5. Protecta® FR Board can be over-painted with most emulsion or alkyd (gloss) paints.

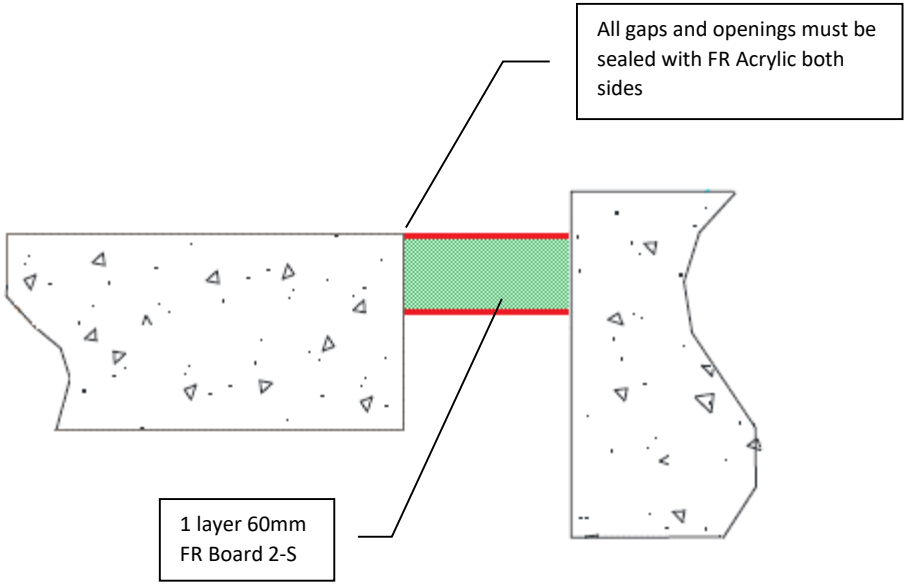

ETA 13/0673

As a part of our policy of on-going product development and testing, we reserve the right to modify, alter or change product specifications without giving notice. All information contained in this document is given in good faith and is provided for guidance only. Any drawings provided are for illustrative purposes only. As Polyseam has no control over the methods or competence of installation and of prevailing site conditions, no warranties, expressed or implied, is intended to be given as to the actual performance of the product mentioned or referred to herein and no liability whatsoever will be accepted for any loss, damage or injury arising from the use of the information given.

For all technical details on the products specified please refer to the technical data sheets that can be found on www.protecta.eu

Signed and approved:

Client:

Job Title:

Products	Protecta FR Board Protecta FR Acrylic
Application	Fire rated linear seals between floor slabs or between floor slab and wall
Construction	Minimum floor thickness of 150 mm and comprise aerated concrete or concrete with a minimum density of 650kg/m^3

Fire & Sound classification

Up to 120mm wide seal friction fitted at any position fully within the cavity
EI 120 & E 240

Up to 800mm wide seal friction fitted at any position fully within the cavity
EI 90 & E 120

Sound reduction (seal only)
55 dB

Protecta®

Polyseam Ltd, 15 St Andrews Road, Huddersfield, West Yorkshire, HD1 6SB
Tel: +44 (0) 148 4421036
Email: post.uk@polyseam.com

Sheet size: **A4**	Drawn date & no: 24/5/18
Scale: **NTS**	Drawn by: K.B

Installation Instructions

1. Ensure the faces of the aperture opening are free of dust and any other contaminants. The faces may be moistened for better adhesion.
2. Bare metal in contact with the seal must be protected against corrosion using a suitable primer/protection system.
3. The seal can be positioned to either side of the construction or anywhere in between.
4. When installing Protecta® EX Mortar in hollow floor slabs or boards, tubular voids should be filled with stone wool normally the same thickness as the depth of the floor slab.
5. Install a stone wool shutter board to achieve the required thickness of mortar. Make sure that this achieves a very tight seal – any small openings should be sealed with Protecta® FR Acrylic
6. Pour clean water into a suitable mixing vessel and pour enough mortar to obtain the required consistency. Mix well to avoid lumps. Always add the mortar to the water, do not reverse this mixing process. For different mix ratios and drying times, please refer to the Technical Data Sheet.
7. Once the desired consistency is achieved pour or trowel the mortar onto the shutter board making sure that it flows into all corners and around services. Apply a firm pressure to the mortar to eliminate any trapped air bubbles. Build up to the required depth.

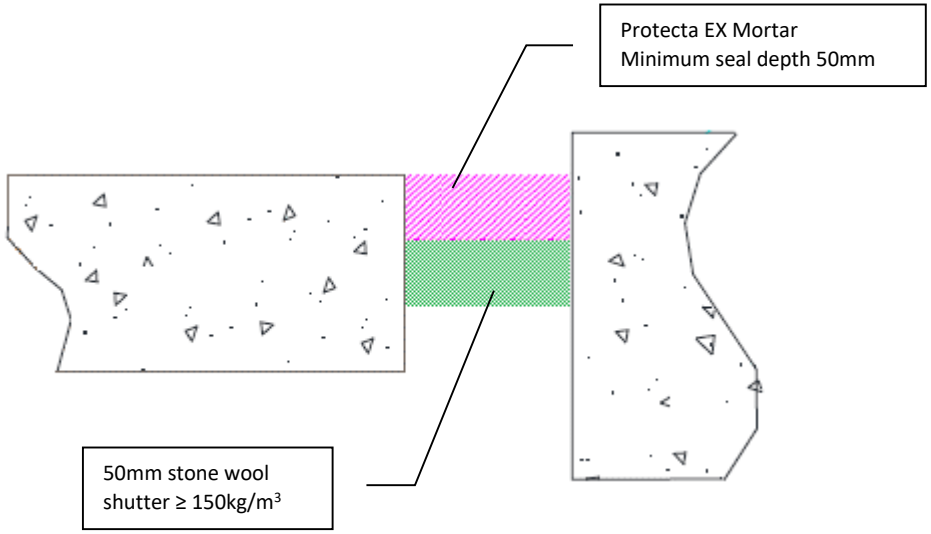

ETA 13/0672

As a part of our policy of on-going product development and testing, we reserve the right to modify, alter or change product specifications without giving notice. All information contained in this document is given in good faith and is provided for guidance only. Any drawings provided are for illustrative purposes only. As Polyseam has no control over the methods or competence of installation and of prevailing site conditions, no warranties, expressed or implied, is intended to be given as to the actual performance of the product mentioned or referred to herein and no liability whatsoever will be accepted for any loss, damage or injury arising from the use of the information given.

For all technical details on the products specified please refer to the technical data sheets that can be found on www.protecta.eu

Signed and approved:

Client:

Job Title:

Products	Protecta EX Mortar Stone wool shutter
Application	Fire rated linear seals between floor slabs or between floor slab and wall
Construction	Minimum floor thickness of 150 mm and comprise aerated concrete or concrete with a minimum density of 650kg/m³

Fire & Sound classification

Up to 800mm wide seal at any position fully within the cavity

EI 180 & E 180

Sound reduction (seal only)

64 dB

Polyseam Ltd, 15 St Andrews Road,
Huddersfield, West Yorkshire, HD1 6SB
Tel: +44 (0) 148 4421036
Email: post.uk@polyseam.com

Sheet size: **A4**	Drawn date & no: 24/5/18
Scale: **NTS**	Drawn by: K.B

Installation Instructions

1. Ensure the faces of the aperture opening are free of dust and any other contaminants. The faces may be moistened for better adhesion.
2. Bare metal in contact with the seal must be protected against corrosion using a suitable primer/protection system.
3. The seal can be positioned to either side of the construction or anywhere in between.
4. When installing Protecta® EX Mortar in hollow floor slabs or boards, level the fire seal with the soffit side. Ensure there is sufficient thickness of concrete below the void for the depth of mortar. Where this is not the case, tubular voids should be filled with stone wool normally the same thickness as the depth of the floor slab. Alternatively, simply fire seal on both sides.
5. Install a shutter board to achieve the required thickness of mortar. Make sure that this achieves a very tight seal.
6. Pour clean water into a suitable mixing vessel and pour enough mortar to obtain the required consistency. Mix well to avoid lumps. Always add the mortar to the water, do not reverse this mixing process. For different mix ratios and drying times, please refer to the Technical Data Sheet.
7. Once the desired consistency is achieved pour or trowel the mortar onto the shutter board making sure that it flows into all corners and around services. Apply a firm pressure to the mortar to eliminate any trapped air bubbles. Build up to the required depth.

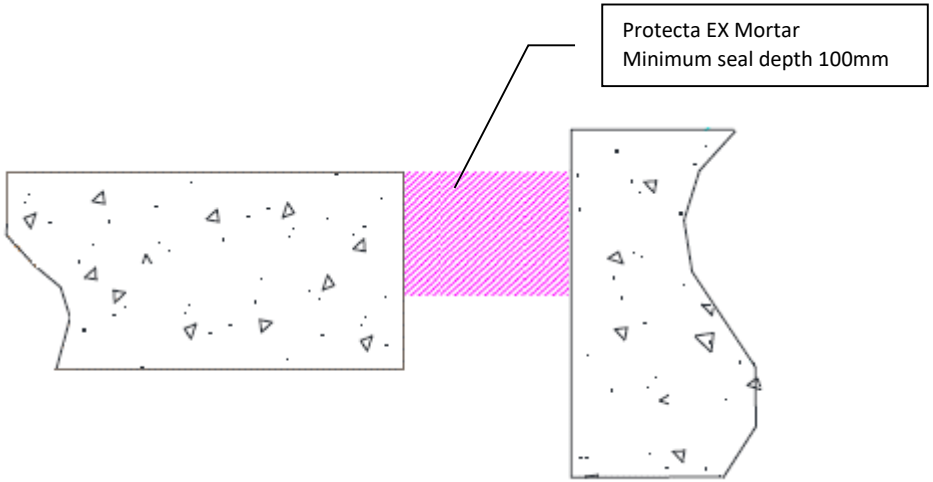

ETA 13/0672

Loadbearing Properties

Soft body impact, serviceability 500Nm. Soft body impact, safety in use 700Nm. Hard body impact serviceability 6Nm. Hard body impact, safety in use 10Nm. Concentrated load up to 15kN.

Client:

Job Title:

Products	Protecta EX Mortar
Application	Fire rated and loadbearing linear seals between floor slabs or between floor slab and wall
Construction	Minimum floor thickness of 150 mm and comprise aerated concrete or concrete with a minimum density of 650kg/m³

Fire & Sound classification

Up to 800mm wide seal at any position fully within the cavity

EI 240 & E 240

Sound reduction (seal only)

64 dB

Polyseam Ltd, 15 St Andrews Road, Huddersfield, West Yorkshire, HD1 6SB
Tel: +44 (0) 148 4421036
Email: post.uk@polyseam.com

For all technical details on the products specified please refer to the technical data sheets that can be found on www.protecta.eu

Signed and approved:

Sheet size: **A4**	Drawn date & no: 24/5/18
Scale: **NTS**	Drawn by: K.B

Installation Instructions

1. Before installing Protecta® FR Acrylic ensure that the surface of all service penetrations and surrounding construction is free from all loose contaminants, dust and grease.
2. Where Protecta® FR Acrylic is to be installed against surfaces that cannot tolerate direct contact; appropriate surface preparation should be made (contact Polyseam for guidance in these cases). For paints sensitive to sealing compounds, priming with a PVA primer is recommended.
3. When installing any backing material, cut this slightly oversize and insert into the gap ensuring a tight friction fit. Ensure correct depth is achieved.
4. Fill the gap or joint with Protecta® FR Acrylic to the required depth.
5. Apply the sealant generously to prevent air bubbles. Finish the bead with a moist spatula, pallet knife or brush.
6. Protecta® FR Acrylic can be over-painted with most emulsion or alkyd (gloss) paints.

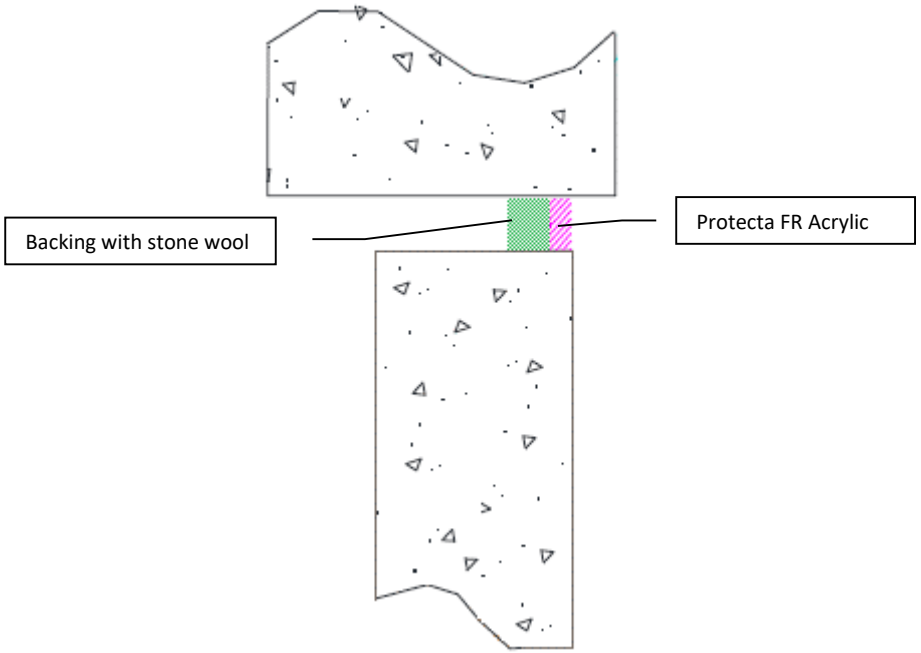

ETA 13/0879 & 13/0880

As a part of our policy of on-going product development and testing, we reserve the right to modify, alter or change product specifications without giving notice. All information contained in this document is given in good faith and is provided for guidance only. Any drawings provided are for illustrative purposes only. As Polyseam has no control over the methods or competence of installation and of prevailing site conditions, no warranties, expressed or implied, is intended to be given as to the actual performance of the product mentioned or referred to herein and no liability whatsoever will be accepted for any loss, damage or injury arising from the use of the information given.

For all technical details on the products specified please refer to the technical data sheets that can be found on www.protecta.eu

Signed and approved:

Client:

Job Title:

Products	Protecta FR Acrylic Stone wool
Application	Fire rated linear seals in rigid walls or between wall and floor
Construction	Minimum wall thickness of 150 mm and comprise concrete, aerated concrete or masonry, with a density of ≥ 650 kg/m³

Fire & Sound classification

Single sided horizontal seal with minimum seal depth 25mm, max seal width 30mm and backing minimum 20mm deep EI 60 & E 240

Single sided horizontal seal with minimum seal depth 10mm, max seal width 50mm and backing minimum 60mm deep EI 60 & E 240

Single sided vertical seal with minimum seal depth 10mm, max seal width 50mm and backing minimum 60mm deep EI 120 & E 120

Sound reduction (minimum depth 12mm) 62 dB

Protecta®

Polyseam Ltd, 15 St Andrews Road, Huddersfield, West Yorkshire, HD1 6SB
Tel: +44 (0) 148 4421036
Email: post.uk@polyseam.com

Sheet size: **A4**	Drawn date & no: 24/5/18
Scale: **NTS**	Drawn by: K.B

Installation Instructions

1. Before installing Protecta® FR Acrylic ensure that the surface of all service penetrations and surrounding construction is free from all loose contaminants, dust and grease.
2. Where Protecta® FR Acrylic is to be installed against surfaces that cannot tolerate direct contact; appropriate surface preparation should be made (contact Polyseam for guidance in these cases). For paints sensitive to sealing compounds, priming with a PVA primer is recommended.
3. When installing any backing material, cut this slightly oversize and insert into the gap ensuring a tight friction fit. Ensure correct depth is achieved.
4. Fill the gap or joint with Protecta® FR Acrylic to the required depth.
5. Apply the sealant generously to prevent air bubbles. Finish the bead with a moist spatula, pallet knife or brush.
6. Protecta® FR Acrylic can be over-painted with most emulsion or alkyd (gloss) paints.

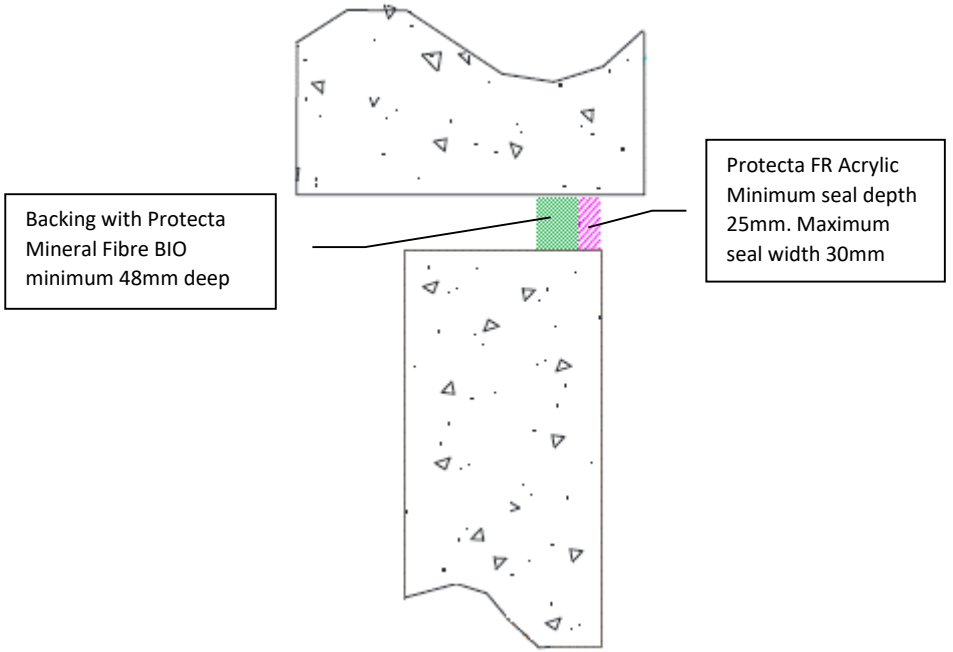

ETA 13/0879 & 13/0880

As a part of our policy of on-going product development and testing, we reserve the right to modify, alter or change product specifications without giving notice. All information contained in this document is given in good faith and is provided for guidance only. Any drawings provided are for illustrative purposes only. As Polyseam has no control over the methods or competence of installation and of prevailing site conditions, no warranties, expressed or implied, is intended to be given as to the actual performance of the product mentioned or referred to herein and no liability whatsoever will be accepted for any loss, damage or injury arising from the use of the information given.

For all technical details on the products specified please refer to the technical data sheets that can be found on www.protecta.eu

Signed and approved:

Client:

Job Title:

Products	Protecta FR Acrylic Protecta Mineral Fibre BIO
Application	Fire rated linear seals in rigid walls or between wall and floor
Construction	Minimum wall thickness of 150 mm and comprise concrete, aerated concrete or masonry, with a density of ≥ 650 kg/m³

Fire & Sound classification

Single sided horizontal seal	EI 120 & E 240
Sound reduction (seal only)	62 dB

Protecta®

Polyseam Ltd, 15 St Andrews Road, Huddersfield, West Yorkshire, HD1 6SB
Tel: +44 (0) 148 4421036
Email: post.uk@polyseam.com

Sheet size: **A4**	Drawn date & no: 24/5/18
Scale: **NTS**	Drawn by: K.B

Installation Instructions

1. Before installing Protecta® FR Acrylic ensure that the surface of all service penetrations and surrounding construction is free from all loose contaminants, dust and grease.
2. Where Protecta® FR Acrylic is to be installed against surfaces that cannot tolerate direct contact; appropriate surface preparation should be made (contact Polyseam for guidance in these cases). For paints sensitive to sealing compounds, priming with a PVA primer is recommended.
3. When installing any backing material, cut this slightly oversize and insert into the gap ensuring a tight friction fit. Ensure correct depth is achieved.
4. Fill the gap or joint with Protecta® FR Acrylic to the required depth.
5. Apply the sealant generously to prevent air bubbles. Finish the bead with a moist spatula, pallet knife or brush.
6. Protecta® FR Acrylic can be over-painted with most emulsion or alkyd (gloss) paints.

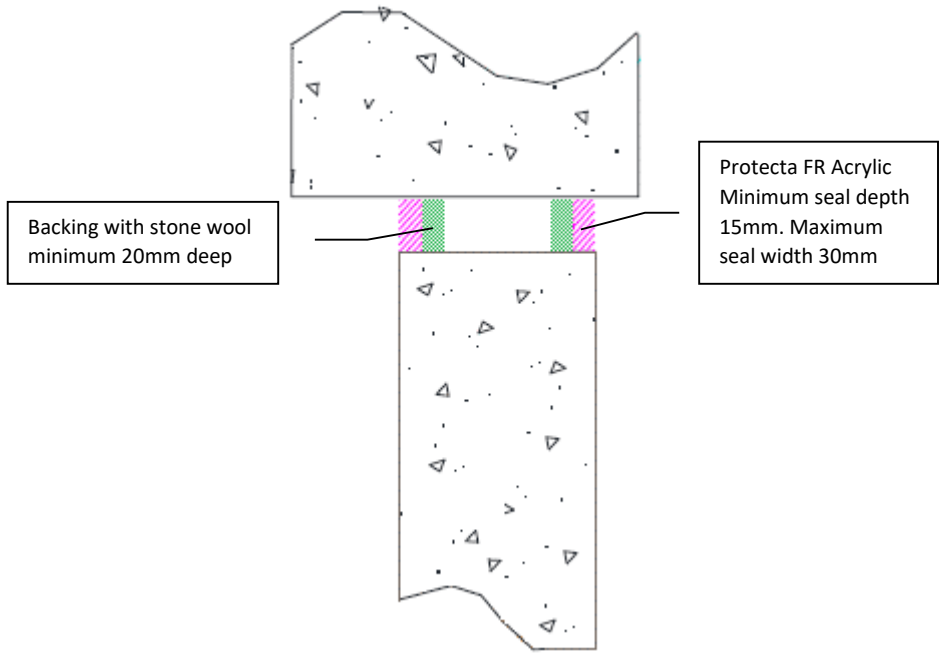

ETA 13/0879 & 13/0880

As a part of our policy of on-going product development and testing, we reserve the right to modify, alter or change product specifications without giving notice. All information contained in this document is given in good faith and is provided for guidance only. Any drawings provided are for illustrative purposes only. As Polyseam has no control over the methods or competence of installation and of prevailing site conditions, no warranties, expressed or implied, is intended to be given as to the actual performance of the product mentioned or referred to herein and no liability whatsoever will be accepted for any loss, damage or injury arising from the use of the information given.

For all technical details on the products specified please refer to the technical data sheets that can be found on www.protecta.eu

Signed and approved:

Client:

Job Title:

Products	Protecta FR Acrylic Stone wool
Application	Fire rated linear seals in rigid walls or between wall and floor
Construction	Minimum wall thickness of 150 mm and comprise concrete, aerated concrete or masonry, with a density of ≥ 650 kg/m³

Fire & Sound classification

Double sided in horizontal or vertical seals
EI 240 & E 240

Sound reduction (seal only)
62 dB

Protecta®

Polyseam Ltd, 15 St Andrews Road, Huddersfield, West Yorkshire, HD1 6SB
Tel: +44 (0) 148 4421036
Email: post.uk@polyseam.com

Sheet size: **A4**	Drawn date & no: 24/5/18
Scale: **NTS**	Drawn by: K.B

Installation Instructions

1. All surfaces must be clean and sound, free from dirt, grease and other contaminants. The surfaces may be damp but not running wet. Use a wet brush to clean surfaces before application to remove loose material and to ensure good contact for adhesion. Primers are not usually required.
2. Cut nozzle to the desired angle and gun firmly into the joint to give a good solid fill. Strike off the sealant flush with the joint sides within ten minutes of application, before surface skinning occurs. The sealant will have low shrinkage during cure and if a flush surface it is recommended to leave the sealant proud.
3. Protecta® FR IPT can be tooled to a smooth finish using a moist plastic stick or similar within 30 minutes of application. IPT Tooling designed for the optimum finish is recommended instead of soap and water as it forms a film between the stick and the sealant.
4. Do not spray the sealant with water or other fluids before skin formation (<30 min). Uncured sealant is soluble in water prior to skinning due to its environmentally friendly IPT chemistry that uses water instead of solvents.
5. Protecta® FR IPT can be over-painted with most emulsion or alkyd (gloss) paints.

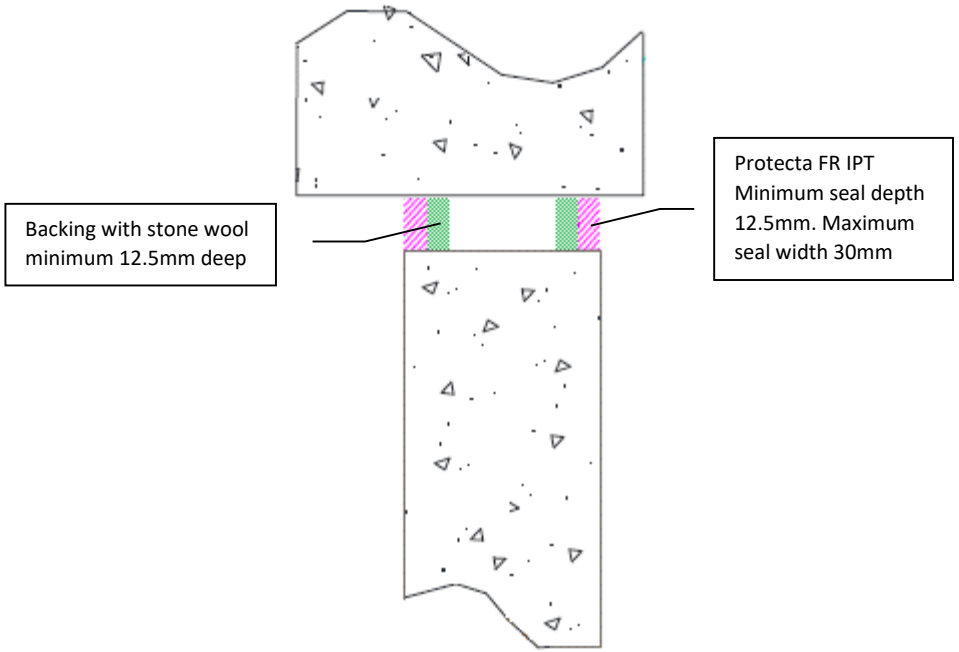

ETA 14/0041

As a part of our policy of on-going product development and testing, we reserve the right to modify, alter or change product specifications without giving notice. All information contained in this document is given in good faith and is provided for guidance only. Any drawings provided are for illustrative purposes only. As Polyseam has no control over the methods or competence of installation and of prevailing site conditions, no warranties, expressed or implied, is intended to be given as to the actual performance of the product mentioned or referred to herein and no liability whatsoever will be accepted for any loss, damage or injury arising from the use of the information given.

For all technical details on the products specified please refer to the technical data sheets that can be found on www.protecta.eu

Signed and approved:

Client:

Job Title:

Products	Protecta FR IPT Stone wool
Application	Fire rated, water proof and movement linear seals in rigid walls or between wall and floor
Construction	Minimum wall thickness of 100 mm and comprise concrete, aerated concrete or masonry, with a density of ≥ 650 kg/m³

Fire, Sealant & Sound classification

Double sided in horizontal or vertical seals
EI 120 & E 120

Classification CE
Facade (interior) 25HM
Sanitary joints XS1

Sound reduction (seal only)
62 dB

Protecta®

Polyseam Ltd, 15 St Andrews Road, Huddersfield, West Yorkshire, HD1 6SB
Tel: +44 (0) 148 4421036
Email: post.uk@polyseam.com

Sheet size: **A4**	Drawn date & no: 24/5/18
Scale: **NTS**	Drawn by: K.B

Installation Instructions

1. Before installing Protecta® FR Board ensure that the surrounding construction is free from all loose contaminants, dust and grease.
2. The board can be positioned to either side of the construction or anywhere in between.
3. Cut the required board(s) to suit the linear seal width. All exposed and cut edges of the board can be sealed with Protecta® FR Coating or Protecta® FR Acrylic prior to fitting which will act as an adhesive and ensure a smoke tight seal.
4. All joints, gaps or imperfections in the installed seal must be filled with Protecta® FR Acrylic on both sides.
5. Protecta® FR Board can be over-painted with most emulsion or alkyd (gloss) paints.

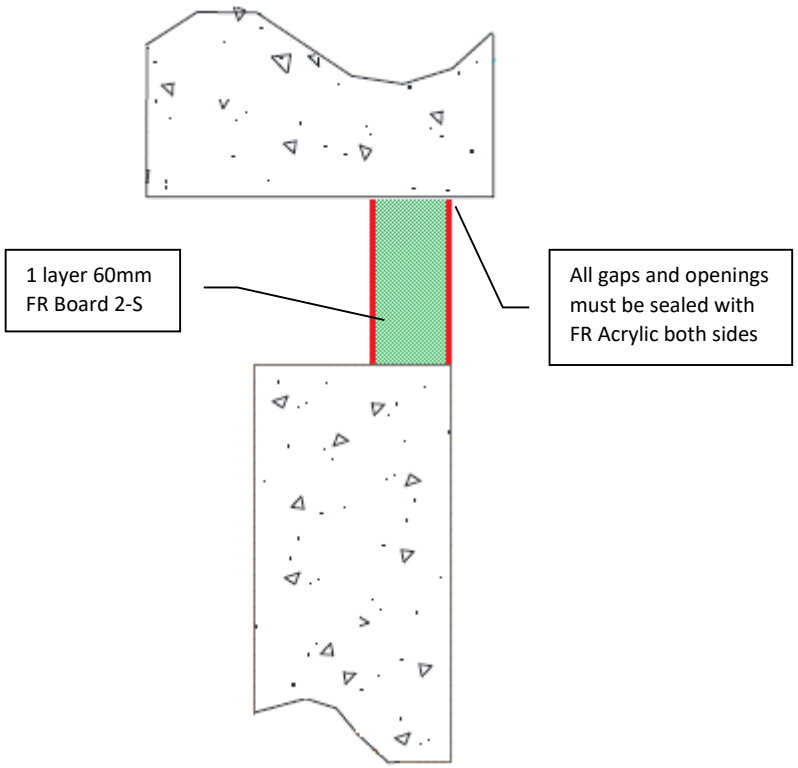

ETA 13/0673

As a part of our policy of on-going product development and testing, we reserve the right to modify, alter or change product specifications without giving notice. All information contained in this document is given in good faith and is provided for guidance only. Any drawings provided are for illustrative purposes only. As Polyseam has no control over the methods or competence of installation and of prevailing site conditions, no warranties, expressed or implied, is intended to be given as to the actual performance of the product mentioned or referred to herein and no liability whatsoever will be accepted for any loss, damage or injury arising from the use of the information given.

For all technical details on the products specified please refer to the technical data sheets that can be found on www.protecta.eu

Signed and approved:

Client:

Job Title:

Products	Protecta FR Board Protecta FR Acrylic
Application	Fire rated linear seals in rigid walls or between wall and floor
Construction	Minimum wall thickness of 150 mm and comprise concrete, aerated concrete or masonry, with a density of ≥ 650 kg/m³

Fire & Sound classification

Up to 1200mm wide horizontal seals friction fitted at any position fully within the cavity
EI 90 & E 240

Sound reduction (seal only)
55 dB

Polyseam Ltd, 15 St Andrews Road, Huddersfield, West Yorkshire, HD1 6SB
Tel: +44 (0) 148 4421036
Email: post.uk@polyseam.com

Sheet size: **A4**	Drawn date & no: 24/5/18
Scale: **NTS**	Drawn by: K.B

Installation Instructions

1. Before installing Protecta® FR Board ensure that the surface of all service penetrations and surrounding construction is free from all loose contaminants, dust and grease.
2. The boards should be flush with the surface of the construction on both sides to maximize the fire resistance.
3. Cut the required board(s) to suit the linear seal width. All exposed and cut edges of the board can be sealed with Protecta® FR Coating or Protecta® FR Acrylic prior to fitting which will act as an adhesive and ensure a smoke tight seal.
4. All joints, gaps or imperfections in the installed seal must be filled with Protecta® FR Acrylic on both sides.
5. Protecta® FR Board can be over-painted with most emulsion or alkyd (gloss) paints.

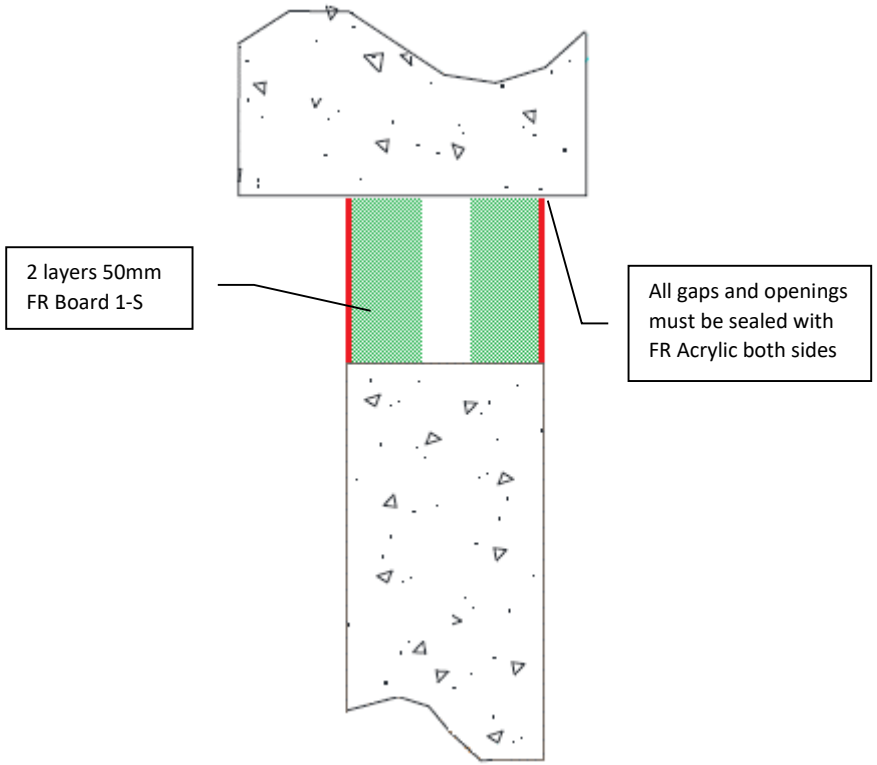

ETA 13/0673

Client:

Job Title:

Products	Protecta FR Board Protecta FR Acrylic
Application	Fire rated linear seals in rigid walls or between wall and floor
Construction	Minimum wall thickness of 100 mm and comprise concrete, aerated concrete or masonry, with a density of ≥ 650 kg/m³

Fire & Sound classification

Up to 1200mm wide horizontal seals friction fitted at any position fully within the cavity
EI 120 & E 120

Sound reduction (seal only)
55 dB

Polyseam Ltd, 15 St Andrews Road, Huddersfield, West Yorkshire, HD1 6SB
Tel: +44 (0) 148 4421036
Email: post.uk@polyseam.com

For all technical details on the products specified please refer to the technical data sheets that can be found on www.protecta.eu

Signed and approved:

Sheet size: **A4**	Drawn date & no: 24/5/18
Scale: **NTS**	Drawn by: K.B

Installation Instructions

1. Before installing Protecta® FR Board ensure that the surface of all service penetrations and surrounding construction is free from all loose contaminants, dust and grease.
2. The boards should be flush with the surface of the construction on both sides to maximize the fire resistance. If this is not possible, there should be an air gap of at least 30mm between the boards.
3. Cut the required board(s) to suit the linear seal width. All exposed and cut edges of the board can be sealed with Protecta® FR Coating or Protecta® FR Acrylic prior to fitting which will act as an adhesive and ensure a smoke tight seal.
4. All joints, gaps or imperfections in the installed seal must be filled with Protecta® FR Acrylic on both sides.
5. Protecta® FR Board can be over-painted with most emulsion or alkyd (gloss) paints.

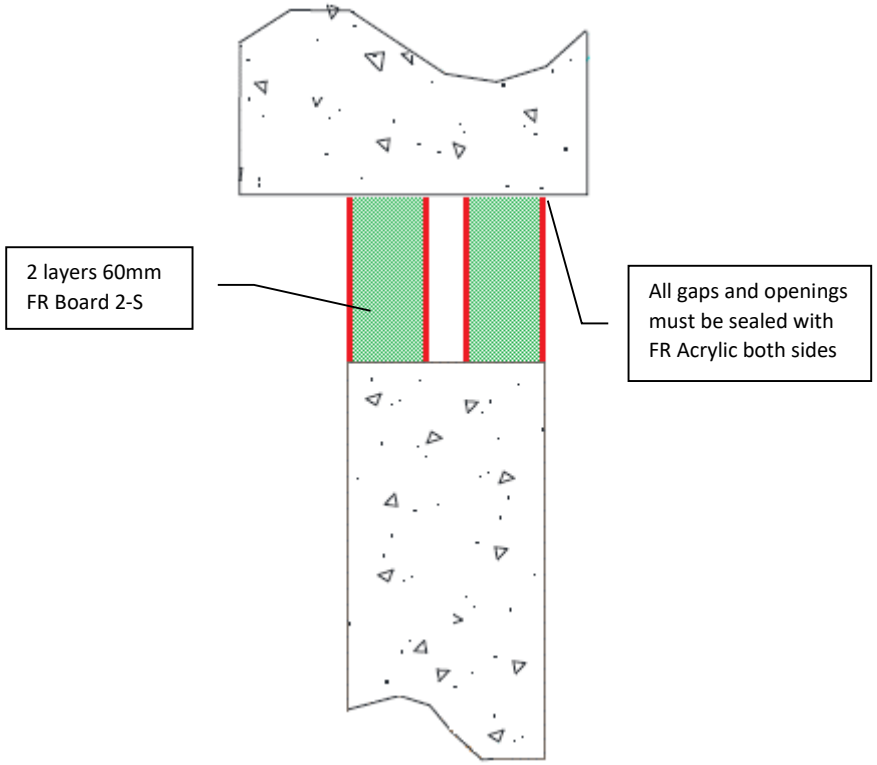

ETA 13/0673

As a part of our policy of on-going product development and testing, we reserve the right to modify, alter or change product specifications without giving notice. All information contained in this document is given in good faith and is provided for guidance only. Any drawings provided are for illustrative purposes only. As Polyseam has no control over the methods or competence of installation and of prevailing site conditions, no warranties, expressed or implied, is intended to be given as to the actual performance of the product mentioned or referred to herein and no liability whatsoever will be accepted for any loss, damage or injury arising from the use of the information given.

For all technical details on the products specified please refer to the technical data sheets that can be found on www.protecta.eu

Signed and approved:

Client:

Job Title:

Products	Protecta FR Board Protecta FR Acrylic
Application	Fire rated linear seals in rigid walls or between wall and floor
Construction	Minimum wall thickness of 150 mm and comprise concrete, aerated concrete or masonry, with a density of ≥ 650 kg/m³

Fire & Sound classification

Up to 1200mm wide horizontal seals flush with the surface on both sides fully within the cavity
EI 180 & E 240

Sound reduction (seal only)
55 dB

Protecta®

Polyseam Ltd, 15 St Andrews Road,
Huddersfield, West Yorkshire, HD1 6SB
Tel: +44 (0) 148 4421036
Email: post.uk@polyseam.com

Sheet size: **A4**	Drawn date & no: 24/5/18
Scale: **NTS**	Drawn by: K.B

Installation Instructions

1. Before installing Protecta® FR Acrylic ensure that the surface of all surrounding construction is free from all loose contaminants, dust and grease.
2. Where Protecta® FR Acrylic is to be installed against surfaces that cannot tolerate direct contact; appropriate surface preparation should be made (contact Polyseam for guidance in these cases). For paints sensitive to sealing compounds, priming with a PVA primer is recommended.
3. When installing the sealant in gypsum boards, the exposed edges of the board can be wetted with water, or Protecta® FR Acrylic diluted with water to prime the surfaces helping adhesion and preventing excessive joint shrinkage.
4. Fill the gap or joint with Protecta® FR Acrylic to the required depth.
5. Apply the sealant generously to prevent air bubbles. Finish the bead with a moist spatula, pallet knife or brush.
6. Protecta® FR Acrylic can be over-painted with most emulsion or alkyd (gloss) paints.

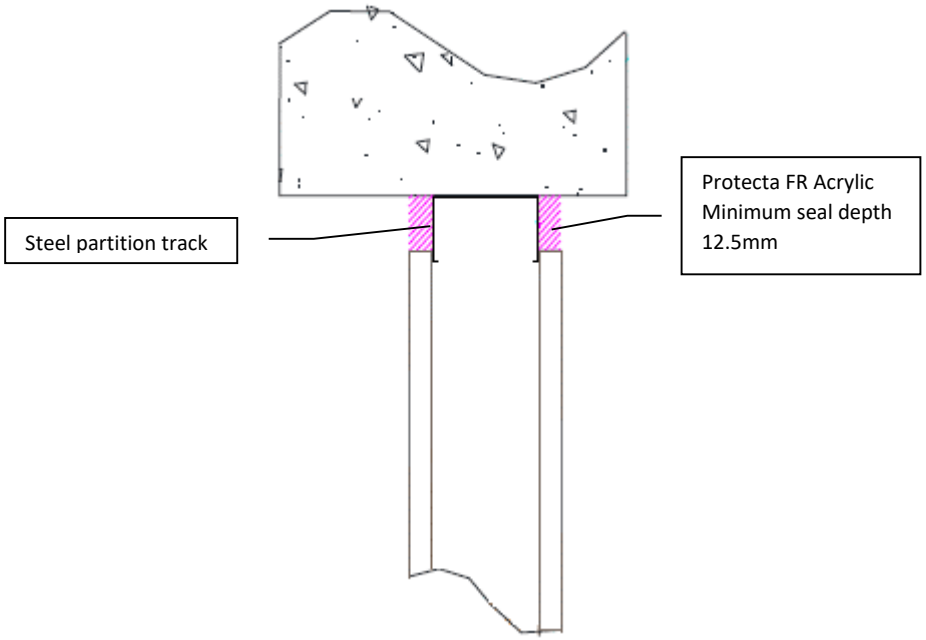

Client:

Job Title:

Products	Protecta FR Acrylic
Application	Fire rated linear seals in flexible walls
Construction	Minimum wall thickness of 75 mm and comprise steel studs or timber studs* lined on both faces with minimum 1 layer of 12.5 mm thick boards.

Fire & Sound classification

Both sides in horizontal seals with maximum seal width 25mm	EI 45 & E 60
Both sides in vertical seals with maximum seal width 15mm	EI 45 & E 60
Sound reduction (seal only)	62 dB

ETA 13/0879 & 13/0880

Polyseam Ltd, 15 St Andrews Road,
Huddersfield, West Yorkshire, HD1 6SB
Tel: +44 (0) 148 4421036
Email: post.uk@polyseam.com

For all technical details on the products specified please refer to the technical data sheets that can be found on www.protecta.eu

Signed and approved:

Sheet size: **A4**	Drawn date & no: 8/4/18
Scale: **NTS**	Drawn by: K.B

Installation Instructions

1. Before installing Protecta® FR Acrylic ensure that the surface of all surrounding construction is free from all loose contaminants, dust and grease.
2. Where Protecta® FR Acrylic is to be installed against surfaces that cannot tolerate direct contact; appropriate surface preparation should be made (contact Polyseam for guidance in these cases). For paints sensitive to sealing compounds, priming with a PVA primer is recommended.
3. When installing the sealant in gypsum boards, the exposed edges of the board can be wetted with water, or Protecta® FR Acrylic diluted with water to prime the surfaces helping adhesion and preventing excessive joint shrinkage.
4. Fill the gap or joint with Protecta® FR Acrylic to the required depth.
5. Apply the sealant generously to prevent air bubbles. Finish the bead with a moist spatula, pallet knife or brush.
6. Protecta® FR Acrylic can be over-painted with most emulsion or alkyd (gloss) paints.

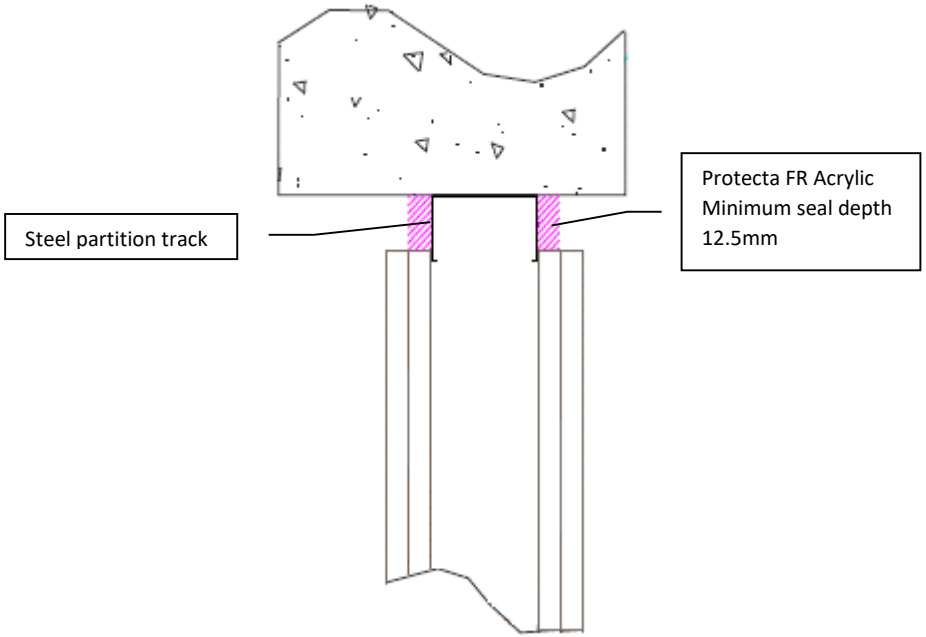

ETA 13/0879 & 13/0880

As a part of our policy of on-going product development and testing, we reserve the right to modify, alter or change product specifications without giving notice. All information contained in this document is given in good faith and is provided for guidance only. Any drawings provided are for illustrative purposes only. As Polyseam has no control over the methods or competence of installation and of prevailing site conditions, no warranties, expressed or implied, is intended to be given as to the actual performance of the product mentioned or referred to herein and no liability whatsoever will be accepted for any loss, damage or injury arising from the use of the information given.

For all technical details on the products specified please refer to the technical data sheets that can be found on www.protecta.eu

Signed and approved:

Client:

Job Title:

Products	Protecta FR Acrylic
Application	Fire rated linear seals in flexible walls
Construction	Minimum wall thickness of 100 mm and comprise steel studs or timber studs* lined on both faces with minimum 2 layers of 12.5 mm thick boards.

Fire & Sound classification

Both sides in horizontal seals with maximum seal width 25mm	EI 90 & E 90
Both sides in vertical seals with maximum seal width 15mm	EI 90 & E 90
Sound reduction (seal only)	62 dB

Polyseam Ltd, 15 St Andrews Road, Huddersfield, West Yorkshire, HD1 6SB
Tel: +44 (0) 148 4421036
Email: post.uk@polyseam.com

Sheet size: **A4**	Drawn date & no: 8/4/18
Scale: **NTS**	Drawn by: K.B

Installation Instructions

1. Before installing Protecta® FR Acrylic ensure that the surface of all surrounding construction is free from all loose contaminants, dust and grease.
2. Where Protecta® FR Acrylic is to be installed against surfaces that cannot tolerate direct contact; appropriate surface preparation should be made (contact Polyseam for guidance in these cases). For paints sensitive to sealing compounds, priming with a PVA primer is recommended.
3. When installing the sealant in gypsum boards, the exposed edges of the board can be wetted with water, or Protecta® FR Acrylic diluted with water to prime the surfaces helping adhesion and preventing excessive joint shrinkage.
4. When installing any backing material, cut this slightly oversize and insert into the gap ensuring a tight friction fit. Ensure correct depth is achieved.
5. Fill the gap or joint with Protecta® FR Acrylic to the required depth.
6. Apply the sealant generously to prevent air bubbles. Finish the bead with a moist spatula, pallet knife or brush.
7. Protecta® FR Acrylic can be over-painted with most emulsion or alkyd (gloss) paints.

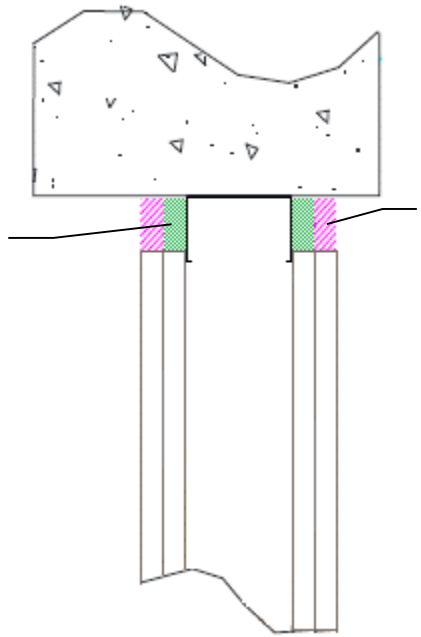

ETA 13/0879 & 13/0880

As a part of our policy of on-going product development and testing, we reserve the right to modify, alter or change product specifications without giving notice. All information contained in this document is given in good faith and is provided for guidance only. Any drawings provided are for illustrative purposes only. As Polyseam has no control over the methods or competence of installation and of prevailing site conditions, no warranties, expressed or implied, is intended to be given as to the actual performance of the product mentioned or referred to herein and no liability whatsoever will be accepted for any loss, damage or injury arising from the use of the information given.

For all technical details on the products specified please refer to the technical data sheets that can be found on www.protecta.eu

Signed and approved:

Client:

Job Title:

Products	Protecta FR Acrylic Stone wool
Application	Fire rated linear seals in flexible walls
Construction	Minimum wall thickness of 100 mm and comprise steel studs or timber studs* lined on both faces with minimum 2 layers of 12.5 mm thick boards.

Fire & Sound classification

Both sides in horizontal seals with maximum seal width 30mm	EI 120 & E 120
Both sides in vertical seals with maximum seal width 15mm	EI 90 & E 90
Sound reduction (seal only)	62 dB

Polyseam Ltd, 15 St Andrews Road, Huddersfield, West Yorkshire, HD1 6SB
Tel: +44 (0) 148 4421036
Email: post.uk@polyseam.com

Sheet size: **A4**	Drawn date & no: 8/4/18
Scale: **NTS**	Drawn by: K.B

Installation Instructions

1. Before installing Protecta® FR Acrylic ensure that the surface of all surrounding construction is free from all loose contaminants, dust and grease.
2. Where Protecta® FR Acrylic is to be installed against surfaces that cannot tolerate direct contact; appropriate surface preparation should be made (contact Polyseam for guidance in these cases). For paints sensitive to sealing compounds, priming with a PVA primer is recommended.
3. When installing the sealant in gypsum boards, the exposed edges of the board can be wetted with water, or Protecta® FR Acrylic diluted with water to prime the surfaces helping adhesion and preventing excessive joint shrinkage.
4. Fill the gap or joint with Protecta® FR Acrylic to the required depth.
5. Apply the sealant generously to prevent air bubbles. Finish the bead with a moist spatula, pallet knife or brush.
6. Protecta® FR Acrylic can be over-painted with most emulsion or alkyd (gloss) paints.

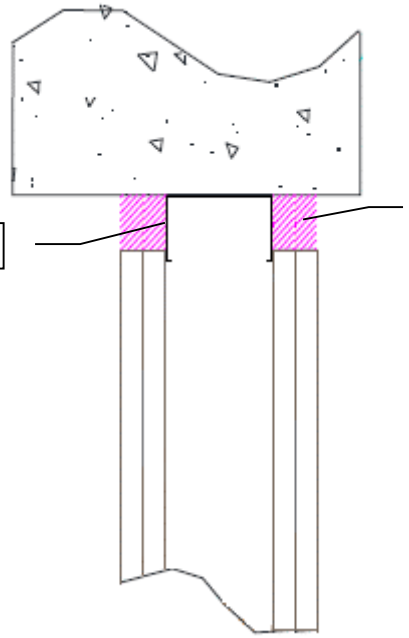

ETA 13/0879 & 13/0880

As a part of our policy of on-going product development and testing, we reserve the right to modify, alter or change product specifications without giving notice. All information contained in this document is given in good faith and is provided for guidance only. Any drawings provided are for illustrative purposes only. As Polyseam has no control over the methods or competence of installation and of prevailing site conditions, no warranties, expressed or implied, is intended to be given as to the actual performance of the product mentioned or referred to herein and no liability whatsoever will be accepted for any loss, damage or injury arising from the use of the information given.

For all technical details on the products specified please refer to the technical data sheets that can be found on www.protecta.eu

Signed and approved:

Client:

Job Title:

Products	Protecta FR Acrylic
Application	Fire rated linear seals in flexible walls
Construction	Minimum wall thickness of 100 mm and comprise steel studs or timber studs* lined on both faces with minimum 2 layers of 12.5 mm thick boards.

Fire & Sound classification

Both sides in horizontal seals with maximum seal width 30mm	EI 120 & E 120
Both sides in vertical seals with maximum seal width 15mm	EI 90 & E 90
Sound reduction (seal only)	62 dB

Polyseam Ltd, 15 St Andrews Road,
Huddersfield, West Yorkshire, HD1 6SB
Tel: +44 (0) 148 4421036
Email: post.uk@polyseam.com

Sheet size: **A4**	Drawn date & no: 8/4/18
Scale: **NTS**	Drawn by: K.B

Installation Instructions

1. All surfaces must be clean and sound, free from dirt, grease and other contaminants. The surfaces may be damp but not running wet. Use a wet brush to clean surfaces before application to remove loose material and to ensure good contact for adhesion. Primers are not usually required.
2. Cut nozzle to the desired angle and gun firmly into the joint to give a good solid fill. Strike off the sealant flush with the joint sides within ten minutes of application, before surface skinning occurs. The sealant will have low shrinkage during cure and if a flush surface it is recommended to leave the sealant proud.
3. Protecta® FR IPT can be tooled to a smooth finish using a moist plastic stick or similar within 30 minutes of application. IPT Tooling designed for the optimum finish is recommended instead of soap and water as it forms a film between the stick and the sealant.
4. Do not spray the sealant with water or other fluids before skin formation (<30 min). Uncured sealant is soluble in water prior to skinning due to its environmentally friendly IPT chemistry that uses water instead of solvents.
5. Protecta® FR IPT can be over-painted with most emulsion or alkyd (gloss) paints.

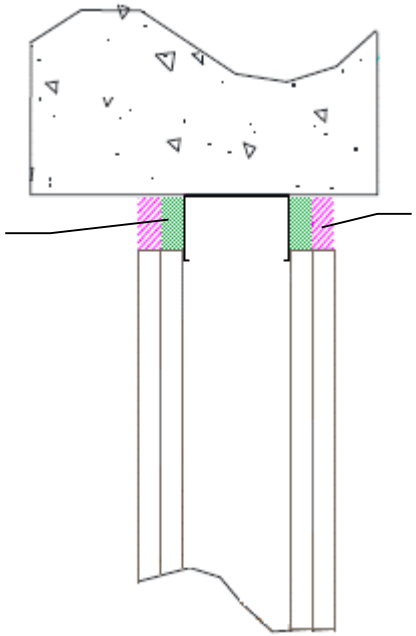

ETA 14/0041

As a part of our policy of on-going product development and testing, we reserve the right to modify, alter or change product specifications without giving notice. All information contained in this document is given in good faith and is provided for guidance only. Any drawings provided are for illustrative purposes only. As Polyseam has no control over the methods or competence of installation and of prevailing site conditions, no warranties, expressed or implied, is intended to be given as to the actual performance of the product mentioned or referred to herein and no liability whatsoever will be accepted for any loss, damage or injury arising from the use of the information given.

For all technical details on the products specified please refer to the technical data sheets that can be found on www.protecta.eu

Signed and approved:

Client:

Job Title:

Products	Protecta FR IPT Stone wool
Application	Fire rated, water proof and movement linear seals in flexible walls
Construction	Minimum wall thickness of 100 mm and comprise steel studs or timber studs* lined on both faces with minimum 2 layers of 12.5 mm thick boards.

Fire, Sealant & Sound classification

Both sides in horizontal and vertical seals with maximum seal width 30mm EI 120 & E 120

Classification CE Facade (interior) 25HM
Sanitary joints XS1

Sound reduction (seal only) 62 dB

Polyseam Ltd, 15 St Andrews Road, Huddersfield, West Yorkshire, HD1 6SB
Tel: +44 (0) 148 4421036
Email: post.uk@polyseam.com

Sheet size: **A4**	Drawn date & no: 8/4/18
Scale: **NTS**	Drawn by: K.B

Installation Instructions

1. Before installing Protecta® FR Board ensure that the surface of all service penetrations and surrounding construction is free from all loose contaminants, dust and grease.
2. The coated side of the board should be flush with the surface of the gypsum on both sides. In seals longer than 2400mm, uninterrupted separating studs will be required at 2400mm centres or less.
3. Cut the required board(s) to suit the linear seal width. All exposed and cut edges of the board can be sealed with Protecta® FR Coating or Protecta® FR Acrylic prior to fitting which will act as an adhesive and ensure a smoke tight seal.
4. All joints, gaps or imperfections in the installed seal must be filled with Protecta® FR Acrylic on both sides.
5. Protecta® FR Board can be over-painted with most emulsion or alkyd (gloss) paints.

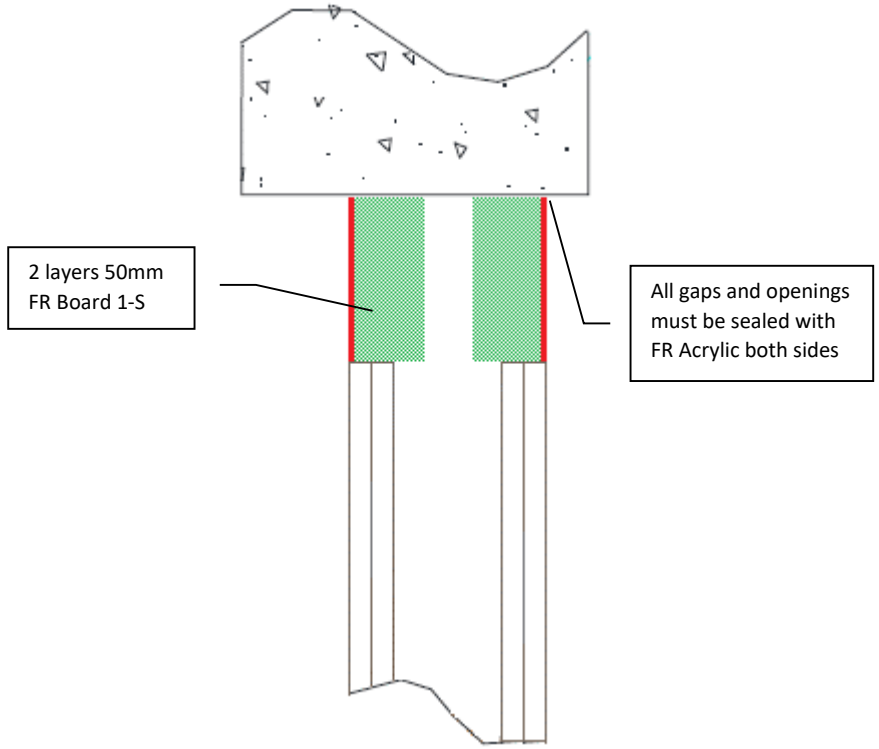

ETA 13/0673

As a part of our policy of on-going product development and testing, we reserve the right to modify, alter or change product specifications without giving notice. All information contained in this document is given in good faith and is provided for guidance only. Any drawings provided are for illustrative purposes only. As Polyseam has no control over the methods or competence of installation and of prevailing site conditions, no warranties, expressed or implied, is intended to be given as to the actual performance of the product mentioned or referred to herein and no liability whatsoever will be accepted for any loss, damage or injury arising from the use of the information given.

For all technical details on the products specified please refer to the technical data sheets that can be found on www.protecta.eu

Signed and approved:

Client:

Job Title:

Products	Protecta FR Board Protecta FR Acrylic
Application	Fire rated linear seals in flexible walls
Construction	Minimum wall thickness of 100 mm and comprise steel studs or timber studs* lined on both faces with minimum 2 layers of 12.5 mm thick boards

Fire & Sound classification

Up to 1200mm wide horizontal seals flush with the surface on both sides fully within the cavity
EI 120 & E 120

Sound reduction (seal only)
55 dB

Polyseam Ltd, 15 St Andrews Road, Huddersfield, West Yorkshire, HD1 6SB
Tel: +44 (0) 148 4421036
Email: post.uk@polyseam.com

Sheet size: **A4**	Drawn date & no: 24/5/18
Scale: **NTS**	Drawn by: K.B

Appendix II

-

Service penetration solutions with gaps ≤ 10mm

Installation Instructions

1. Before installing Protecta® FR Putty Cord ensure that the surface of all service penetrations and surrounding construction is wiped clean, dry, free from all loose contaminants, dust, oils and grease.
2. Place the Putty Cord around the services so that it seals the services to the floor all the way round.
3. Press the Putty Cord into the floor and services with your thumbs to form a fillet or V shape joint, ensuring good contact is made all the way round the services and the floor.

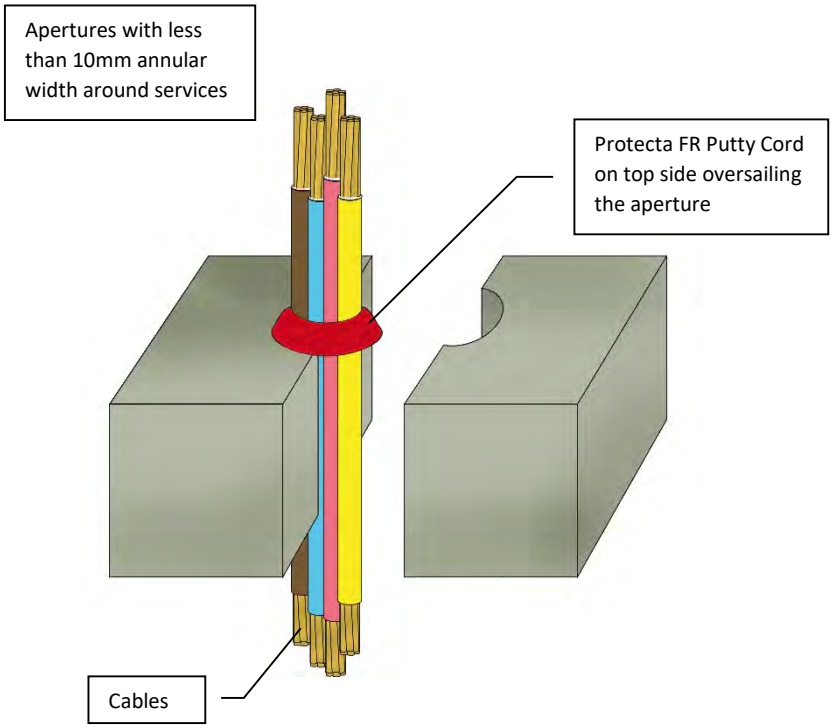

ETA 16/0322

As a part of our policy of on-going product development and testing, we reserve the right to modify, alter or change product specifications without giving notice. All information contained in this document is given in good faith and is provided for guidance only. Any drawings provided are for illustrative purposes only. As Polyseam has no control over the methods or competence of installation and of prevailing site conditions, no warranties, expressed or implied, is intended to be given as to the actual performance of the product mentioned or referred to herein and no liability whatsoever will be accepted for any loss, damage or injury arising from the use of the information given.

For all technical details on the products specified please refer to the technical data sheets that can be found on www.protecta.eu

Signed and approved:

Client:

Job Title:

Products	Protecta FR Putty Cord Ø15mm
Application	Fire stopping of cables in rigid floors
Construction	Minimum floor thickness of 150 mm and comprise aerated concrete or concrete with a minimum density of 650kg/m³

Fire & Sound classification

Single cables ≤ Ø 21mm	EI 120 & E 120
Single cables ≤ Ø 50mm	EI 90 & E 120
Single cables ≤ Ø 80mm	EI 60 & E 120
Cables ≤ Ø 21mm in tied bundles ≤ Ø 50mm	EI 60 & E 120

Polyseam Ltd, 15 St Andrews Road, Huddersfield, West Yorkshire, HD1 6SB
Tel: +44 (0) 148 4421036
Email: post.uk@polyseam.com

Sheet size: **A4**	Drawn date & no: 29/5/18
Scale: **NTS**	Drawn by: K.B

Installation Instructions

1. Before installing Protecta® FR Putty Cord ensure that the surface of all service penetrations and surrounding construction is wiped clean, dry, free from all loose contaminants, dust, oils and grease.
2. Place the Putty Cord around the services so that it seals the services to the floor all the way round.
3. Press the Putty Cord into the floor and services with your thumbs to form a fillet or V shape joint, ensuring good contact is made all the way round the services and the floor.

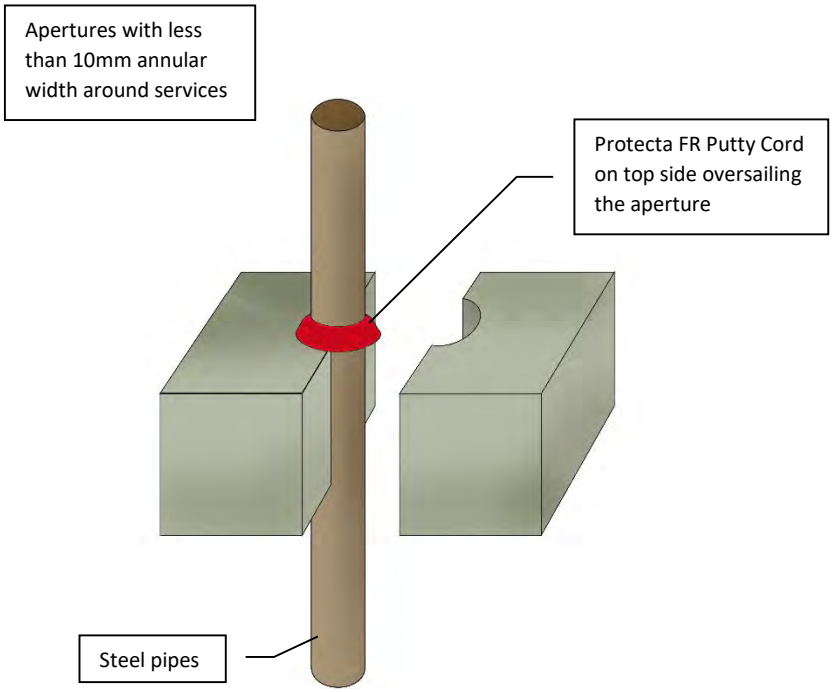

ETA 16/0322

As a part of our policy of on-going product development and testing, we reserve the right to modify, alter or change product specifications without giving notice. All information contained in this document is given in good faith and is provided for guidance only. Any drawings provided are for illustrative purposes only. As Polyseam has no control over the methods or competence of installation and of prevailing site conditions, no warranties, expressed or implied, is intended to be given as to the actual performance of the product mentioned or referred to herein and no liability whatsoever will be accepted for any loss, damage or injury arising from the use of the information given.

For all technical details on the products specified please refer to the technical data sheets that can be found on www.protecta.eu

Signed and approved:

Client:

Job Title:

Products	Protecta FR Putty Cord Ø15mm
Application	Fire stopping of steel pipes in rigid floors
Construction	Minimum floor thickness of 150 mm and comprise aerated concrete or concrete with a minimum density of 650kg/m³

Fire & Sound classification

Steel pipes ≤ Ø 22mm

EI 120 C/U & E 120 C/U

Polyseam Ltd, 15 St Andrews Road, Huddersfield, West Yorkshire, HD1 6SB
Tel: +44 (0) 148 4421036
Email: post.uk@polyseam.com

Sheet size: **A4**	Drawn date & no: 29/5/18
Scale: **NTS**	Drawn by: K.B

Installation Instructions

1. Before installing Protecta® FR Putty Cord ensure that the surface of all service penetrations and surrounding construction is wiped clean, dry, free from all loose contaminants, dust, oils and grease.
2. Place the Putty Cord around the services so that it seals the services to the floor all the way round.
3. Press the Putty Cord into the floor and services with your thumbs to form a fillet or V shape joint, ensuring good contact is made all the way round the services and the floor.

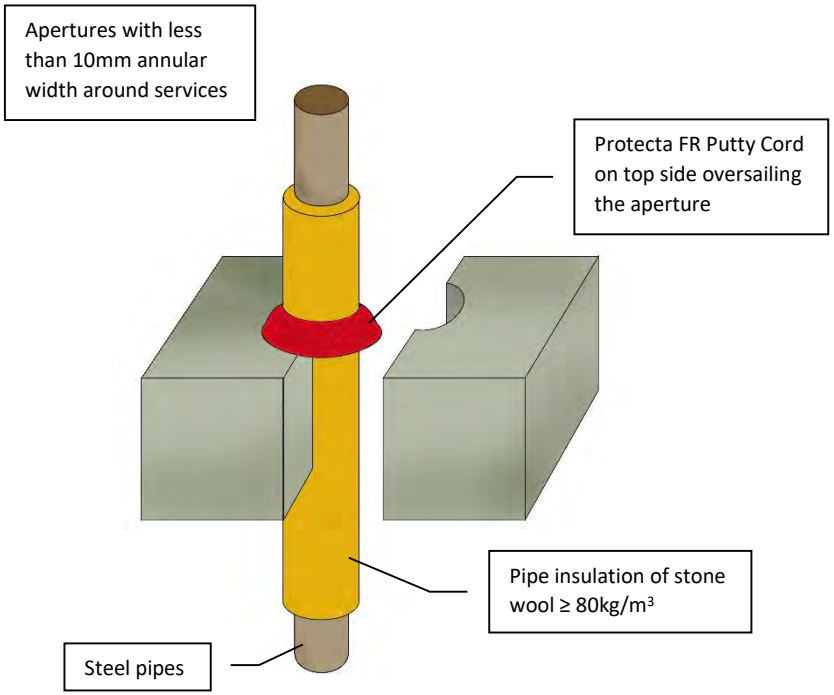

ETA 16/0322

As a part of our policy of on-going product development and testing, we reserve the right to modify, alter or change product specifications without giving notice. All information contained in this document is given in good faith and is provided for guidance only. Any drawings provided are for illustrative purposes only. As Polyseam has no control over the methods or competence of installation and of prevailing site conditions, no warranties, expressed or implied, is intended to be given as to the actual performance of the product mentioned or referred to herein and no liability whatsoever will be accepted for any loss, damage or injury arising from the use of the information given.

For all technical details on the products specified please refer to the technical data sheets that can be found on www.protecta.eu

Signed and approved:

Client:

Job Title:

Products	Protecta FR Putty Cord Ø15mm
Application	Fire stopping of steel pipes in rigid floors
Construction	Minimum floor thickness of 150 mm and comprise aerated concrete or concrete with a minimum density of 650kg/m³

Fire & Sound classification

Steel pipes ≤ Ø40mm with 20mm thick continuous pipe insulation
EI 240 C/U & E 240 C/U

Steel pipes ≤ Ø324mm with 30-80mm thick continuous pipe insulation
EI 240 C/U & E 240 C/U

Polyseam Ltd, 15 St Andrews Road, Huddersfield, West Yorkshire, HD1 6SB
Tel: +44 (0) 148 4421036
Email: post.uk@polyseam.com

Sheet size: **A4**	Drawn date & no: 11/11/18
Scale: **NTS**	Drawn by: K.B

Installation Instructions

1. Before installing Protecta® FR Putty Cord ensure that the surface of all service penetrations and surrounding construction is wiped clean, dry, free from all loose contaminants, dust, oils and grease.
2. Place the Putty Cord around the services so that it seals the services to the floor all the way round.
3. Press the Putty Cord into the floor and services with your thumbs to form a fillet or V shape joint, ensuring good contact is made all the way round the services and the floor.

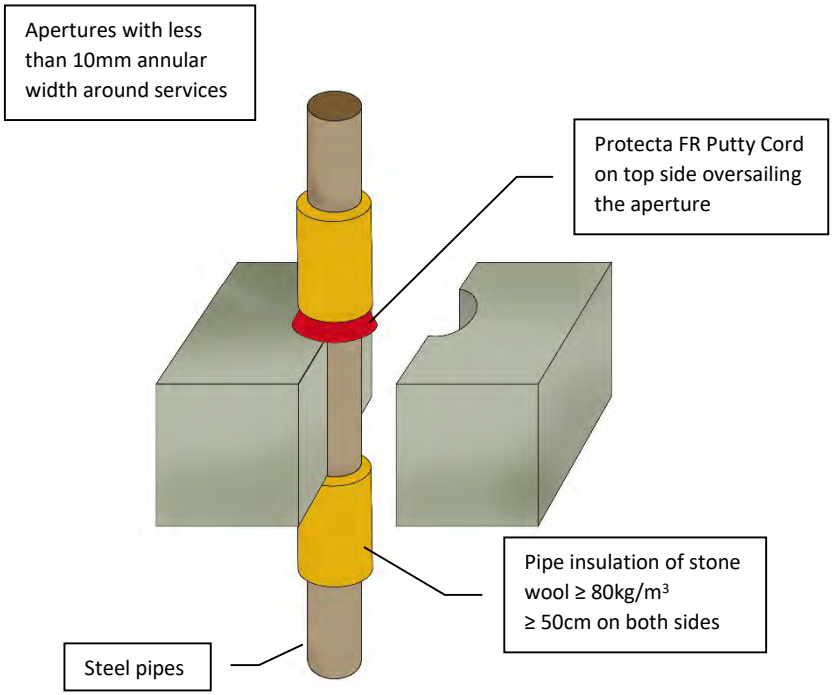

ETA 16/0322

As a part of our policy of on-going product development and testing, we reserve the right to modify, alter or change product specifications without giving notice. All information contained in this document is given in good faith and is provided for guidance only. Any drawings provided are for illustrative purposes only. As Polyseam has no control over the methods or competence of installation and of prevailing site conditions, no warranties, expressed or implied, is intended to be given as to the actual performance of the product mentioned or referred to herein and no liability whatsoever will be accepted for any loss, damage or injury arising from the use of the information given.

For all technical details on the products specified please refer to the technical data sheets that can be found on www.protecta.eu

Signed and approved:

Client:

Job Title:

Products	Protecta FR Putty Cord Ø15mm
Application	Fire stopping of steel pipes in rigid floors
Construction	Minimum floor thickness of 150 mm and comprise aerated concrete or concrete with a minimum density of 650kg/m³

Fire & Sound classification

Steel pipes ≤ Ø40mm with ≥ 20mm thick pipe insulation

EI 240 C/U & E 240 C/U

Steel pipes ≤ Ø324mm with ≥ 30mm thick pipe insulation

EI 60 C/U & E 240 C/U

Polyseam Ltd, 15 St Andrews Road, Huddersfield, West Yorkshire, HD1 6SB
Tel: +44 (0) 148 4421036
Email: post.uk@polyseam.com

Sheet size:	Drawn date & no:
A4	29/5/18
Scale:	Drawn by:
NTS	K.B

Installation Instructions

1. Before installing Protecta® FR Putty Cord ensure that the surface of all service penetrations and surrounding construction is wiped clean, dry, free from all loose contaminants, dust, oils and grease.
2. Place the Putty Cord around the services so that it seals the services to the floor all the way round.
3. Press the Putty Cord into the floor and services with your thumbs to form a fillet or V shape joint, ensuring good contact is made all the way round the services and the floor.

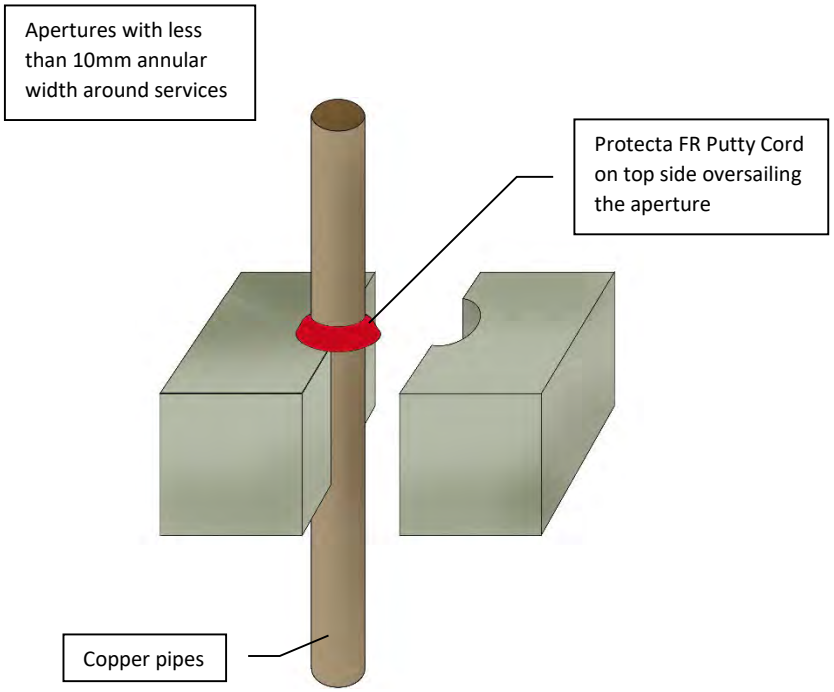

ETA 16/0322

As a part of our policy of on-going product development and testing, we reserve the right to modify, alter or change product specifications without giving notice. All information contained in this document is given in good faith and is provided for guidance only. Any drawings provided are for illustrative purposes only. As Polyseam has no control over the methods or competence of installation and of prevailing site conditions, no warranties, expressed or implied, is intended to be given as to the actual performance of the product mentioned or referred to herein and no liability whatsoever will be accepted for any loss, damage or injury arising from the use of the information given.

For all technical details on the products specified please refer to the technical data sheets that can be found on www.protecta.eu

Signed and approved:

Client:

Job Title:

Products	Protecta FR Putty Cord Ø15mm
Application	Fire stopping of copper pipes in rigid floors
Construction	Minimum floor thickness of 150 mm and comprise aerated concrete or concrete with a minimum density of 650kg/m³

Fire & Sound classification

Copper pipes ≤ Ø 6mm
EI 120 C/C & E 120 C/C

Copper pipes ≤ Ø 10mm
EI 90 C/C & E 120 C/C

Polyseam Ltd, 15 St Andrews Road, Huddersfield, West Yorkshire, HD1 6SB
Tel: +44 (0) 148 4421036
Email: post.uk@polyseam.com

Sheet size: **A4**	Drawn date & no: 29/5/18
Scale: **NTS**	Drawn by: K.B

Installation Instructions

1. Before installing Protecta® FR Putty Cord ensure that the surface of all service penetrations and surrounding construction is wiped clean, dry, free from all loose contaminants, dust, oils and grease.
2. Place the Putty Cord around the services so that it seals the services to the floor all the way round.
3. Press the Putty Cord into the floor and services with your thumbs to form a fillet or V shape joint, ensuring good contact is made all the way round the services and the floor.

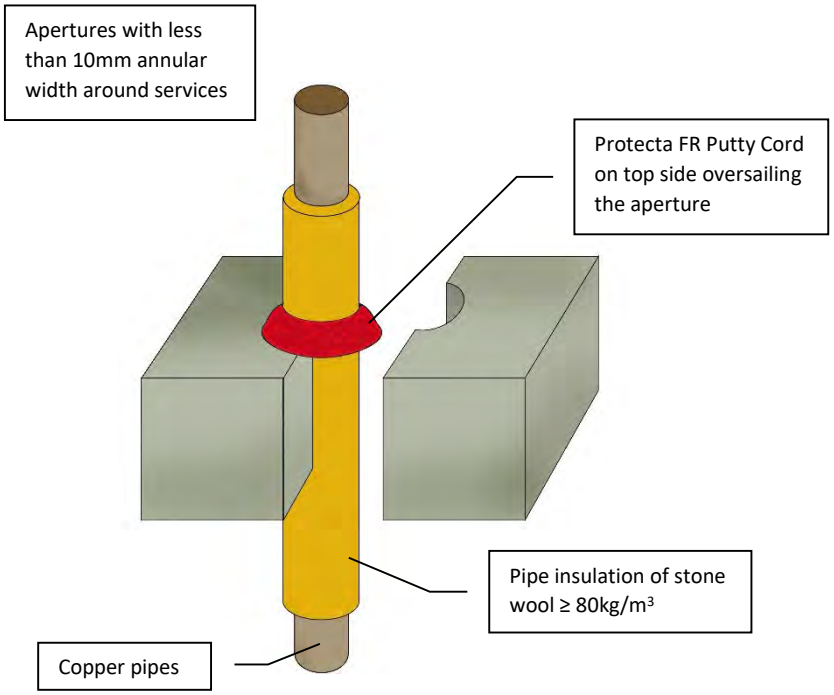

ETA 16/0322

As a part of our policy of on-going product development and testing, we reserve the right to modify, alter or change product specifications without giving notice. All information contained in this document is given in good faith and is provided for guidance only. Any drawings provided are for illustrative purposes only. As Polyseam has no control over the methods or competence of installation and of prevailing site conditions, no warranties, expressed or implied, is intended to be given as to the actual performance of the product mentioned or referred to herein and no liability whatsoever will be accepted for any loss, damage or injury arising from the use of the information given.

For all technical details on the products specified please refer to the technical data sheets that can be found on www.protecta.eu

Signed and approved:

Client:

Job Title:

Products	Protecta FR Putty Cord Ø15mm
Application	Fire stopping of copper pipes in rigid floors
Construction	Minimum floor thickness of 150 mm and comprise aerated concrete or concrete with a minimum density of 650kg/m³

Fire & Sound classification

Copper pipes ≤ Ø12mm with 20mm thick continuous pipe insulation
EI 240 C/C & E 240 C/C

Copper pipes ≤ Ø54mm with 30-80mm thick continuous pipe insulation
EI 240 C/C & E 240 C/C

Polyseam Ltd, 15 St Andrews Road, Huddersfield, West Yorkshire, HD1 6SB
Tel: +44 (0) 148 4421036
Email: post.uk@polyseam.com

Sheet size:	Drawn date & no:
A4	11/11/18
Scale:	Drawn by:
NTS	K.B

Installation Instructions

1. Before installing Protecta® FR Putty Cord ensure that the surface of all service penetrations and surrounding construction is wiped clean, dry, free from all loose contaminants, dust, oils and grease.
2. Place the Putty Cord around the services so that it seals the services to the floor all the way round.
3. Press the Putty Cord into the floor and services with your thumbs to form a fillet or V shape joint, ensuring good contact is made all the way round the services and the floor.

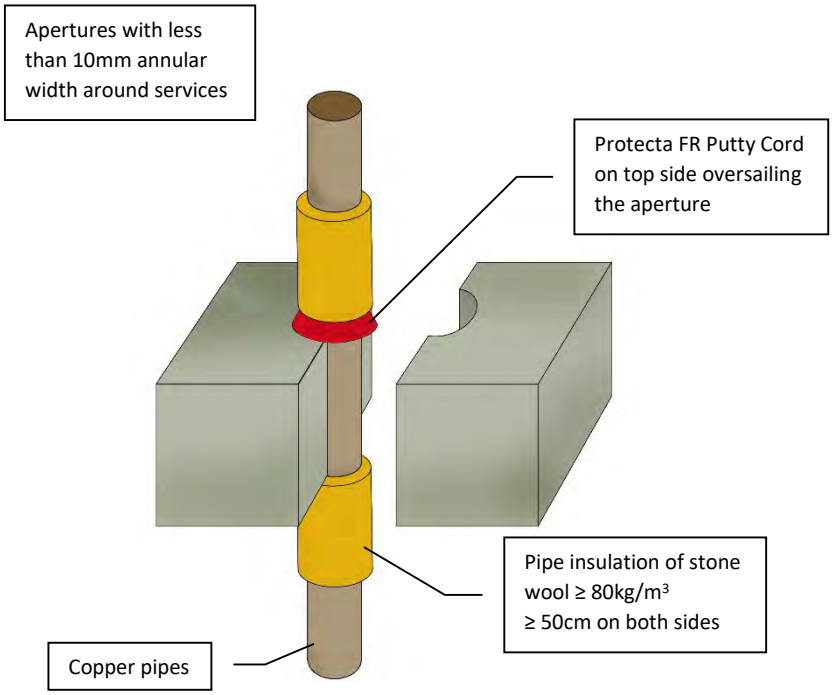

ETA 16/0322

For all technical details on the products specified please refer to the technical data sheets that can be found on www.protecta.eu

Signed and approved:

Client:

Job Title:

Products	Protecta FR Putty Cord Ø15mm
Application	Fire stopping of copper pipes in rigid floors
Construction	Minimum floor thickness of 150 mm and comprise aerated concrete or concrete with a minimum density of 650kg/m³

Fire & Sound classification

Copper pipes ≤ Ø12mm with ≥ 20mm thick pipe insulation

EI 240 C/C & E 240 C/C

Copper pipes ≤ Ø54mm with ≥ 20mm thick pipe insulation

EI 60 C/C & E 240 C/C

Polyseam Ltd, 15 St Andrews Road, Huddersfield, West Yorkshire, HD1 6SB
Tel: +44 (0) 148 4421036
Email: post.uk@polyseam.com

Sheet size: **A4**	Drawn date & no: 29/5/18
Scale: **NTS**	Drawn by: K.B

Installation Instructions

1. A single pipe collar is installed on the underside of the floor.
2. Before fitting the pipe collar ensure that any gaps between the pipe and the separating element are sealed.
3. Place a pipe collar around the service penetration (pipe) and ensure that the fixing lugs are positioned tightly to the surface of the floor so that the fixings can be inserted fully.
4. Where the surface is uneven, apply a sealing bead of Protecta® FR Acrylic between the floor and the pipe collar.
5. Attach the pipe collar with steel screws or fixings that are suitable for the substrate that the pipe collar will be fitted to; use ≥ Ø4 x 50mm long masonry screws or expansion bolts.

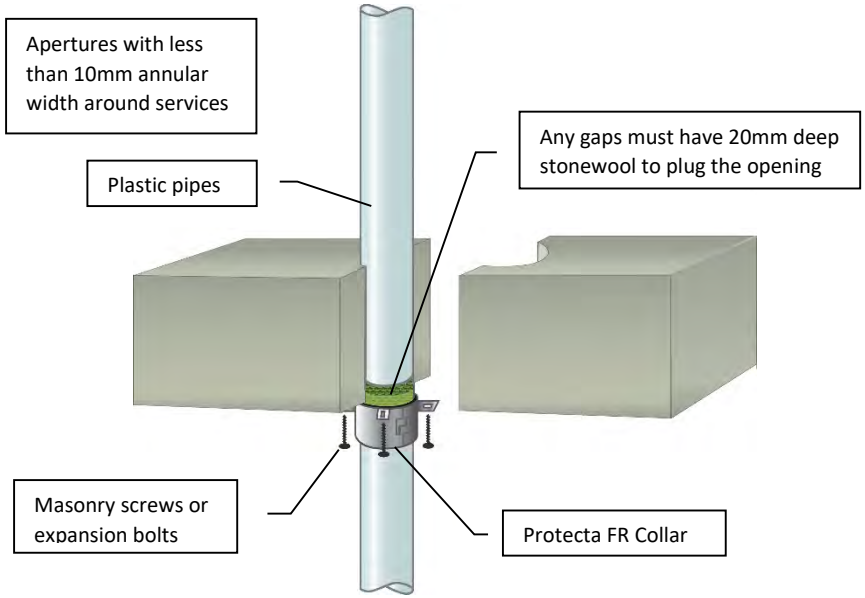

Services	Minimum Collar Height	Classification
≤ Ø110mm PVC-U & PVC-C	30mm	EI 60 C/C, EI 60 U/C, EI 60 C/U, EI 60 U/U
≤ Ø110mm PVC-U & PVC-C	50mm	EI 120 C/C, EI 120 U/C, EI 60 C/U, EI 60 U/U
≤ Ø125mm PVC-U & PVC-C	60mm	EI 120 C/C, EI 120 U/C, EI 60 C/U, EI 60 U/U
≤ Ø160mm PVC-U & PVC-C	60mm	EI 120 C/C, EI 120 U/C, EI 60 C/U, EI 60 U/U
≤ Ø50mm PE, ABS & SAN+PVC	30mm	EI 60 C/C, EI 60 U/C, EI 60 C/U, EI 60 U/U
≤ Ø50mm PE, ABS & SAN+PVC	50mm	EI 120 C/C, EI 120 U/C, EI 60 C/U, EI 60 U/U
≤ Ø110mm PE, ABS & SAN+PVC	50mm	EI 120 C/C, EI 120 U/C, EI 60 C/U, EI 60 U/U
≤ Ø160mm PE, ABS & SAN+PVC	60mm	EI 120 C/C, EI 120 U/C, EI 60 C/U, EI 60 U/U
≤ Ø50mm PP	30mm	EI 120 C/C, EI 120 U/C, EI 120 C/U, EI 120 U/U
≤ Ø110mm PP	50mm	EI 120 C/C, EI 120 U/C, EI 60 C/U, EI 60 U/U
≤ Ø125mm PP	60mm	EI 120 C/C, EI 120 U/C
≤ Ø160mm PP	60mm	EI 180 C/C, EI 180 U/C

ETA 14/0249

Client:

Job Title:

Products Protecta FR Collar

Application Fire stopping of plastic pipes in rigid floors

Construction Minimum floor thickness of 150 mm and comprise aerated concrete or concrete with a minimum density of 650kg/m³

Fire & Sound classification

Fire classifications in table on the left.

Sound reduction (seal only) 58dB

Polyseam Ltd, 15 St Andrews Road, Huddersfield, West Yorkshire, HD1 6SB
Tel: +44 (0) 148 4421036
Email: post.uk@polyseam.com

For all technical details on the products specified please refer to the technical data sheets that can be found on www.protecta.eu

Signed and approved:

Sheet size:	Drawn date & no:
A4	24/5/18
Scale:	Drawn by:
NTS	K.B

Installation Instructions

1. Before installing Protecta® FR Putty Cord ensure that the surface of all service penetrations and surrounding construction is wiped clean, dry, free from all loose contaminants, dust, oils and grease.
2. Place the Putty Cord around the services so that it seals the services to the wall all the way round.
3. Press the Putty Cord into the wall and services with your thumbs to form a fillet or V shape joint, ensuring good contact is made all the way round the services and the wall.

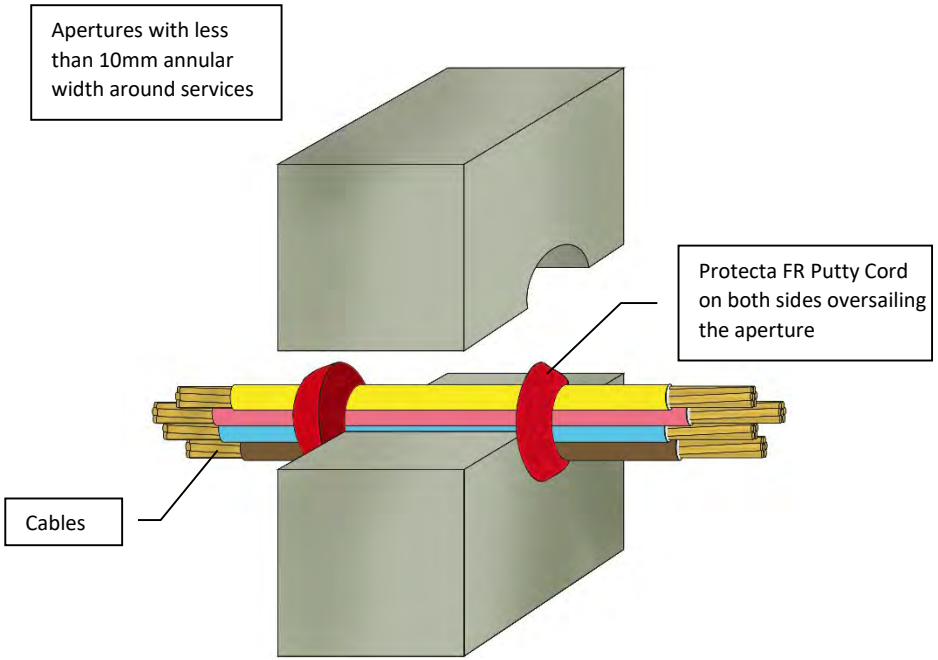

ETA 16/0322

As a part of our policy of on-going product development and testing, we reserve the right to modify, alter or change product specifications without giving notice. All information contained in this document is given in good faith and is provided for guidance only. Any drawings provided are for illustrative purposes only. As Polyseam has no control over the methods or competence of installation and of prevailing site conditions, no warranties, expressed or implied, is intended to be given as to the actual performance of the product mentioned or referred to herein and no liability whatsoever will be accepted for any loss, damage or injury arising from the use of the information given.

For all technical details on the products specified please refer to the technical data sheets that can be found on www.protecta.eu

Signed and approved:

Client:

Job Title:

Products	Protecta FR Putty Cord Ø15mm
Application	Fire stopping of cables in rigid walls
Construction	Minimum wall thickness of 100 mm and comprise concrete, aerated concrete or masonry, with a density of ≥ 650 kg/m³

Fire & Sound classification

Cables ≤ Ø 21mm, single or in a bundle ≤ Ø 50mm
EI 120 & E 120

Cables ≤ Ø 80mm, single or in a bundle ≤ Ø 50mm
EI 60 & E 60

Polyseam Ltd, 15 St Andrews Road, Huddersfield, West Yorkshire, HD1 6SB
Tel: +44 (0) 148 4421036
Email: post.uk@polyseam.com

Sheet size: **A4**	Drawn date & no: 29/5/18
Scale: **NTS**	Drawn by: K.B

Installation Instructions

1. Before installing Protecta® FR Putty Cord ensure that the surface of all service penetrations and surrounding construction is wiped clean, dry, free from all loose contaminants, dust, oils and grease.
2. Place the Putty Cord around the services so that it seals the services to the wall all the way round.
3. Press the Putty Cord into the wall and services with your thumbs to form a fillet or V shape joint, ensuring good contact is made all the way round the services and the wall.

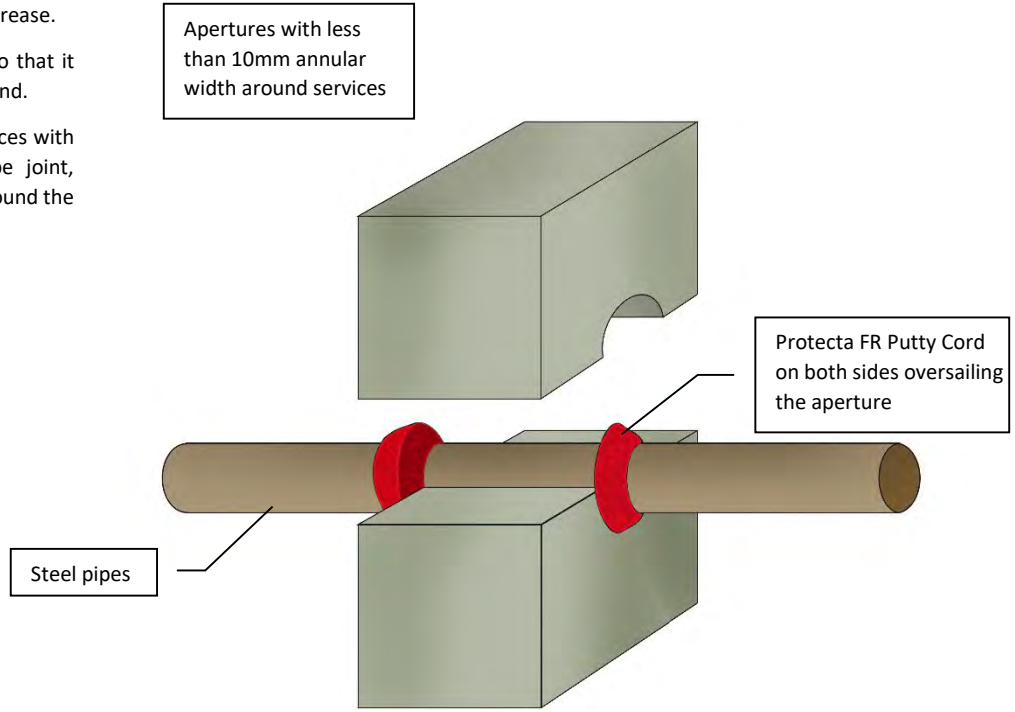

ETA 16/0322

As a part of our policy of on-going product development and testing, we reserve the right to modify, alter or change product specifications without giving notice. All information contained in this document is given in good faith and is provided for guidance only. Any drawings provided are for illustrative purposes only. As Polyseam has no control over the methods or competence of installation and of prevailing site conditions, no warranties, expressed or implied, is intended to be given as to the actual performance of the product mentioned or referred to herein and no liability whatsoever will be accepted for any loss, damage or injury arising from the use of the information given.

For all technical details on the products specified please refer to the technical data sheets that can be found on www.protecta.eu

Signed and approved:

Client:

Job Title:

Products	Protecta FR Putty Cord Ø15mm
Application	Fire stopping of steel pipes in rigid walls
Construction	Minimum wall thickness of 100 mm and comprise concrete, aerated concrete or masonry, with a density of ≥ 650 kg/m³

Fire & Sound classification

Steel pipes ≤ Ø 22mm — EI 60 C/U & E 120 C/U

Steel pipes ≤ Ø 30mm — EI 45 C/U & E 120 C/U

Polyseam Ltd, 15 St Andrews Road, Huddersfield, West Yorkshire, HD1 6SB
Tel: +44 (0) 148 4421036
Email: post.uk@polyseam.com

Sheet size: **A4**	Drawn date & no: 29/5/18
Scale: **NTS**	Drawn by: K.B

Installation Instructions

1. Before installing Protecta® FR Putty Cord ensure that the surface of all service penetrations and surrounding construction is wiped clean, dry, free from all loose contaminants, dust, oils and grease.
2. Place the Putty Cord around the services so that it seals the services to the wall all the way round.
3. Press the Putty Cord into the wall and services with your thumbs to form a fillet or V shape joint, ensuring good contact is made all the way round the services and the wall.

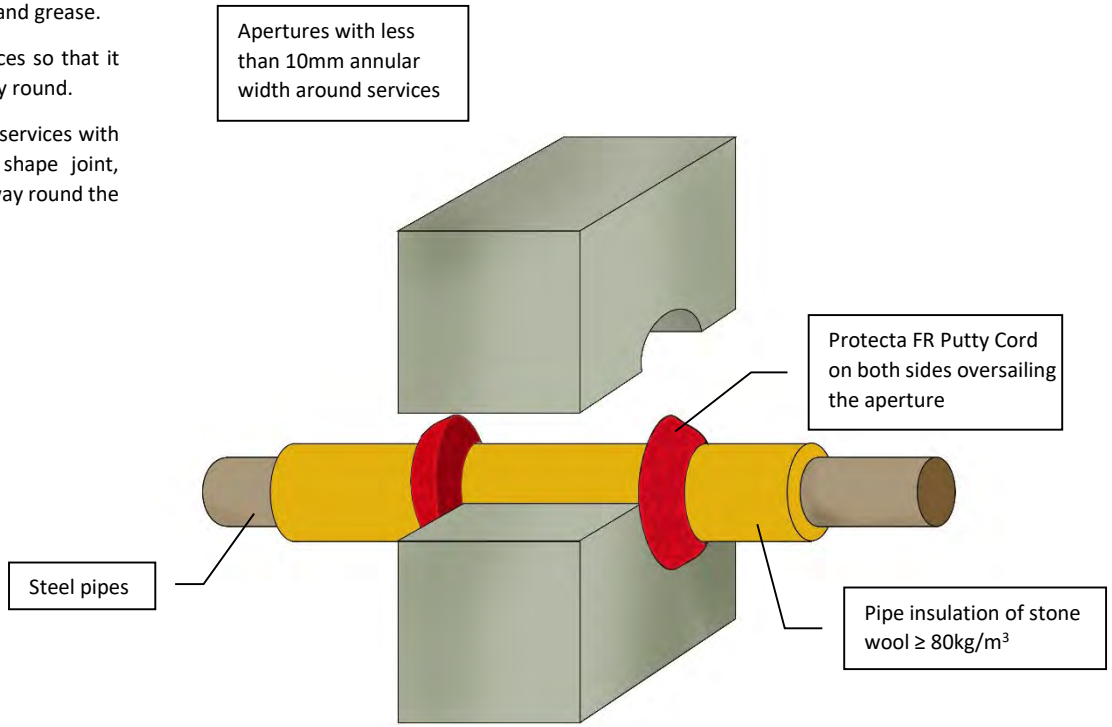

ETA 16/0322

As a part of our policy of on-going product development and testing, we reserve the right to modify, alter or change product specifications without giving notice. All information contained in this document is given in good faith and is provided for guidance only. Any drawings provided are for illustrative purposes only. As Polyseam has no control over the methods or competence of installation and of prevailing site conditions, no warranties, expressed or implied, is intended to be given as to the actual performance of the product mentioned or referred to herein and no liability whatsoever will be accepted for any loss, damage or injury arising from the use of the information given.

For all technical details on the products specified please refer to the technical data sheets that can be found on www.protecta.eu

Signed and approved:

Client:

Job Title:

Products	Protecta FR Putty Cord Ø15mm
Application	Fire stopping of steel pipes in rigid walls
Construction	Minimum wall thickness of 100 mm and comprise concrete, aerated concrete or masonry, with a density of ≥ 650 kg/m³

Fire & Sound classification

Steel pipes ≤ Ø40mm with 20mm thick continuous pipe insulation
EI 120 C/U & E 120 C/U

Steel pipes ≤ Ø324mm with 30-80mm thick continuous pipe insulation
EI 60 C/U & E 90 C/U

Polyseam Ltd, 15 St Andrews Road, Huddersfield, West Yorkshire, HD1 6SB
Tel: +44 (0) 148 4421036
Email: post.uk@polyseam.com

Sheet size: **A4**	Drawn date & no: 11/11/18
Scale: **NTS**	Drawn by: K.B

Installation Instructions

1. Before installing Protecta® FR Putty Cord ensure that the surface of all service penetrations and surrounding construction is wiped clean, dry, free from all loose contaminants, dust, oils and grease.
2. Place the Putty Cord around the services so that it seals the services to the wall all the way round.
3. Press the Putty Cord into the wall and services with your thumbs to form a fillet or V shape joint, ensuring good contact is made all the way round the services and the wall.

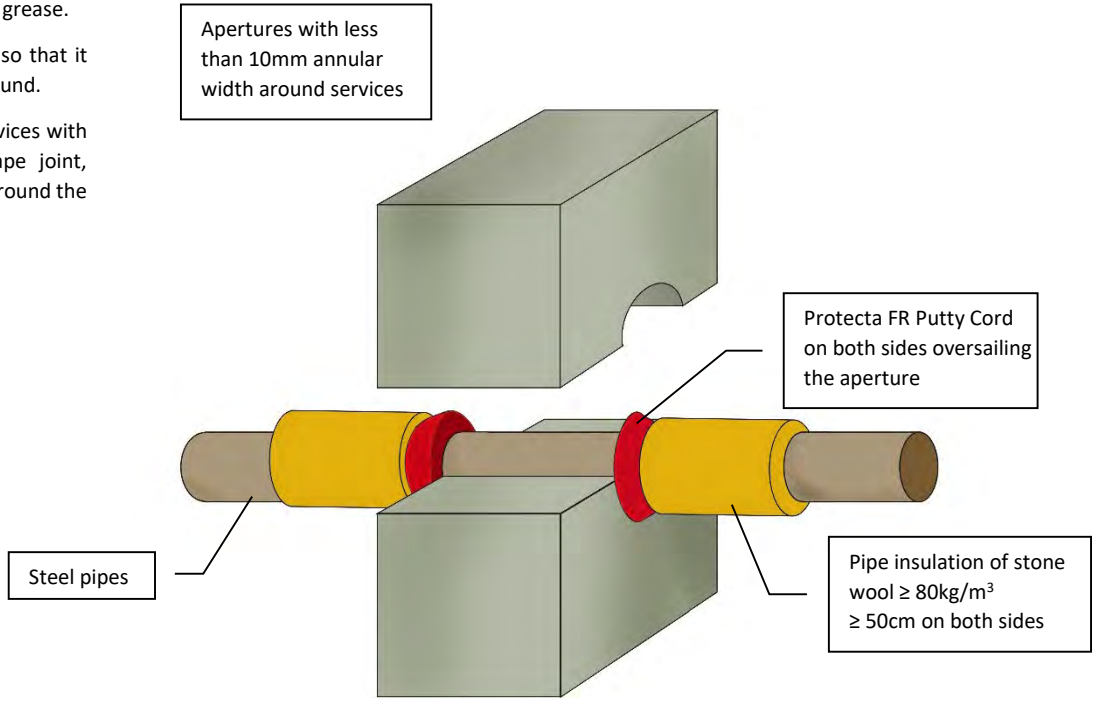

ETA 16/0322

As a part of our policy of on-going product development and testing, we reserve the right to modify, alter or change product specifications without giving notice. All information contained in this document is given in good faith and is provided for guidance only. Any drawings provided are for illustrative purposes only. As Polyseam has no control over the methods or competence of installation and of prevailing site conditions, no warranties, expressed or implied, is intended to be given as to the actual performance of the product mentioned or referred to herein and no liability whatsoever will be accepted for any loss, damage or injury arising from the use of the information given.

For all technical details on the products specified please refer to the technical data sheets that can be found on www.protecta.eu

Signed and approved:

Client:

Job Title:

Products	Protecta FR Putty Cord Ø15mm
Application	Fire stopping of steel pipes in rigid walls
Construction	Minimum wall thickness of 100 mm and comprise concrete, aerated concrete or masonry, with a density of ≥ 650 kg/m³

Fire & Sound classification

Steel pipes ≤ Ø40mm with ≥ 20mm thick pipe insulation
EI 120 C/U & E 120 C/U

Steel pipes ≤ Ø324mm with ≥ 30mm thick pipe insulation
EI 120 C/U & E 120 C/U

Polyseam Ltd, 15 St Andrews Road, Huddersfield, West Yorkshire, HD1 6SB
Tel: +44 (0) 148 4421036
Email: post.uk@polyseam.com

Sheet size:	Drawn date & no:
A4	11/11/18
Scale:	Drawn by:
NTS	K.B

Installation Instructions

1. Before installing Protecta® FR Putty Cord ensure that the surface of all service penetrations and surrounding construction is wiped clean, dry, free from all loose contaminants, dust, oils and grease.
2. Place the Putty Cord around the services so that it seals the services to the wall all the way round.
3. Press the Putty Cord into the wall and services with your thumbs to form a fillet or V shape joint, ensuring good contact is made all the way round the services and the wall.

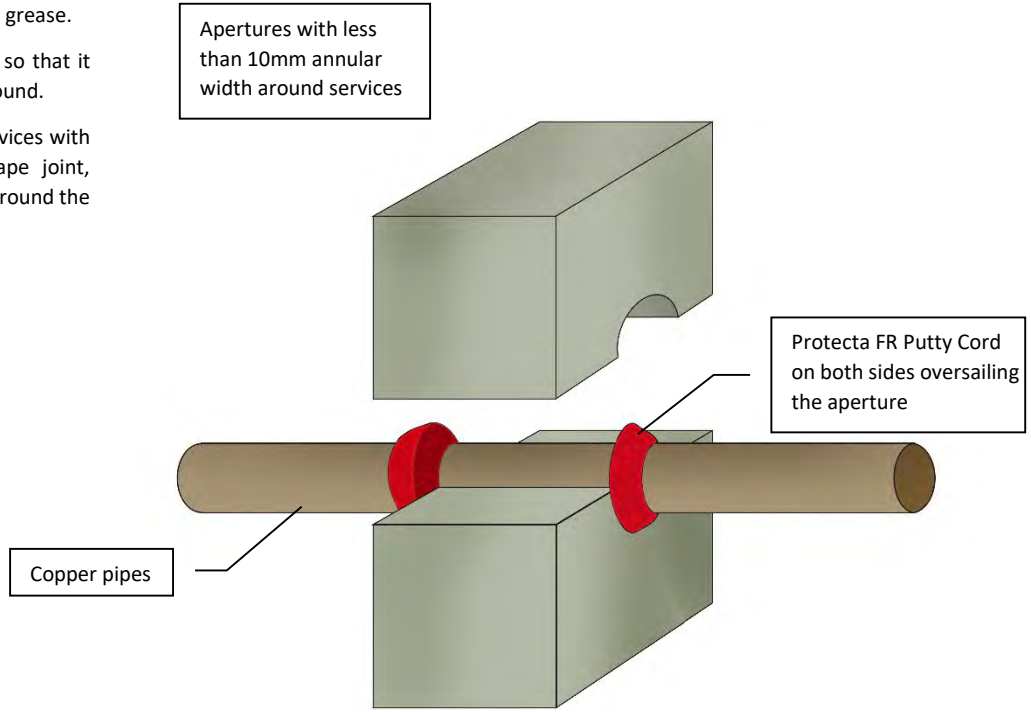

ETA 16/0322

As a part of our policy of on-going product development and testing, we reserve the right to modify, alter or change product specifications without giving notice. All information contained in this document is given in good faith and is provided for guidance only. Any drawings provided are for illustrative purposes only. As Polyseam has no control over the methods or competence of installation and of prevailing site conditions, no warranties, expressed or implied, is intended to be given as to the actual performance of the product mentioned or referred to herein and no liability whatsoever will be accepted for any loss, damage or injury arising from the use of the information given.

For all technical details on the products specified please refer to the technical data sheets that can be found on www.protecta.eu

Signed and approved:

Client:

Job Title:

Products	Protecta FR Putty Cord Ø15mm
Application	Fire stopping of copper pipes in rigid walls
Construction	Minimum wall thickness of 100 mm and comprise concrete, aerated concrete or masonry, with a density of ≥ 650 kg/m³

Fire & Sound classification

Copper pipes ≤ Ø 6mm
EI 120 C/C & E 120 C/C

Copper pipes ≤ Ø 12mm
EI 60 C/C & E 120 C/C

Polyseam Ltd, 15 St Andrews Road, Huddersfield, West Yorkshire, HD1 6SB
Tel: +44 (0) 148 4421036
Email: post.uk@polyseam.com

Sheet size:	Drawn date & no:
A4	29/5/18
Scale:	Drawn by:
NTS	K.B

Installation Instructions

1. Before installing Protecta® FR Putty Cord ensure that the surface of all service penetrations and surrounding construction is wiped clean, dry, free from all loose contaminants, dust, oils and grease.
2. Place the Putty Cord around the services so that it seals the services to the wall all the way round.
3. Press the Putty Cord into the wall and services with your thumbs to form a fillet or V shape joint, ensuring good contact is made all the way round the services and the wall.

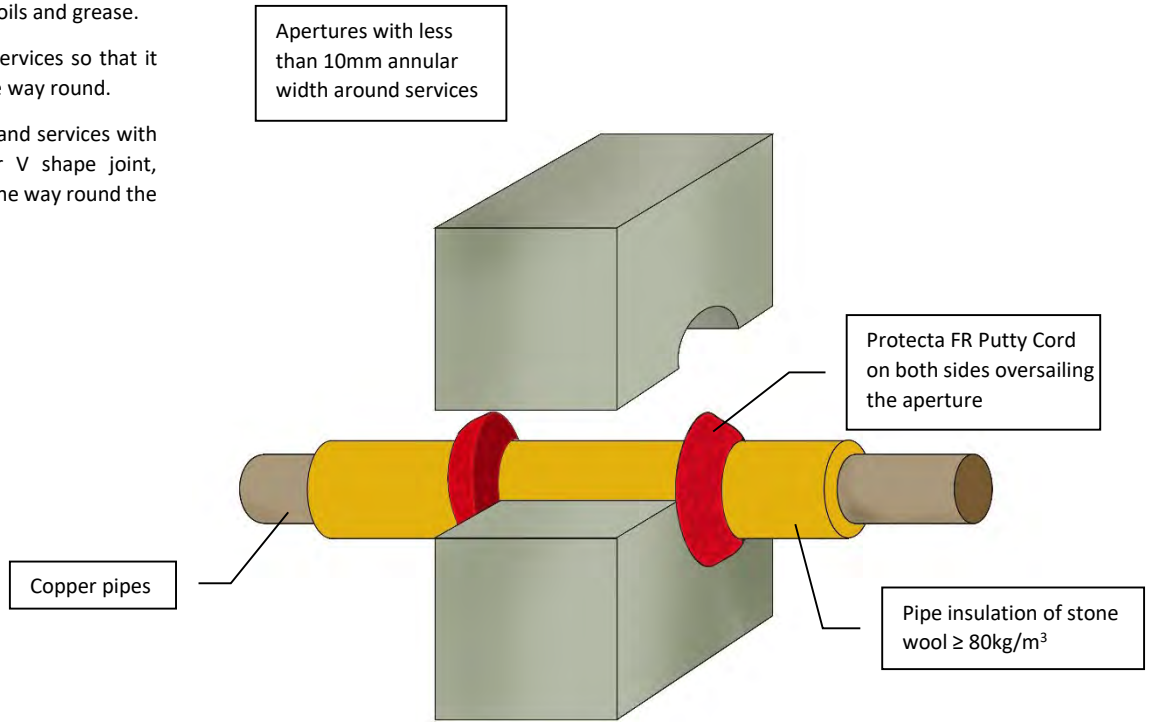

ETA 16/0322

As a part of our policy of on-going product development and testing, we reserve the right to modify, alter or change product specifications without giving notice. All information contained in this document is given in good faith and is provided for guidance only. Any drawings provided are for illustrative purposes only. As Polyseam has no control over the methods or competence of installation and of prevailing site conditions, no warranties, expressed or implied, is intended to be given as to the actual performance of the product mentioned or referred to herein and no liability whatsoever will be accepted for any loss, damage or injury arising from the use of the information given.

For all technical details on the products specified please refer to the technical data sheets that can be found on www.protecta.eu

Signed and approved:

Client:

Job Title:

Products	Protecta FR Putty Cord Ø15mm
Application	Fire stopping of copper pipes in rigid walls
Construction	Minimum wall thickness of 100 mm and comprise concrete, aerated concrete or masonry, with a density of ≥ 650 kg/m³

Fire & Sound classification

Copper pipes ≤ Ø12mm with 20mm thick continuous pipe insulation
EI 60 C/C & E 90 C/C

Copper pipes ≤ Ø54mm with 30-80mm thick continuous pipe insulation
EI 60 C/C & E 90 C/C

Polyseam Ltd, 15 St Andrews Road, Huddersfield, West Yorkshire, HD1 6SB
Tel: +44 (0) 148 4421036
Email: post.uk@polyseam.com

Sheet size:	Drawn date & no:
A4	11/11/18
Scale:	Drawn by:
NTS	K.B

Installation Instructions

1. Before installing Protecta® FR Putty Cord ensure that the surface of all service penetrations and surrounding construction is wiped clean, dry, free from all loose contaminants, dust, oils and grease.
2. Place the Putty Cord around the services so that it seals the services to the wall all the way round.
3. Press the Putty Cord into the wall and services with your thumbs to form a fillet or V shape joint, ensuring good contact is made all the way round the services and the wall.

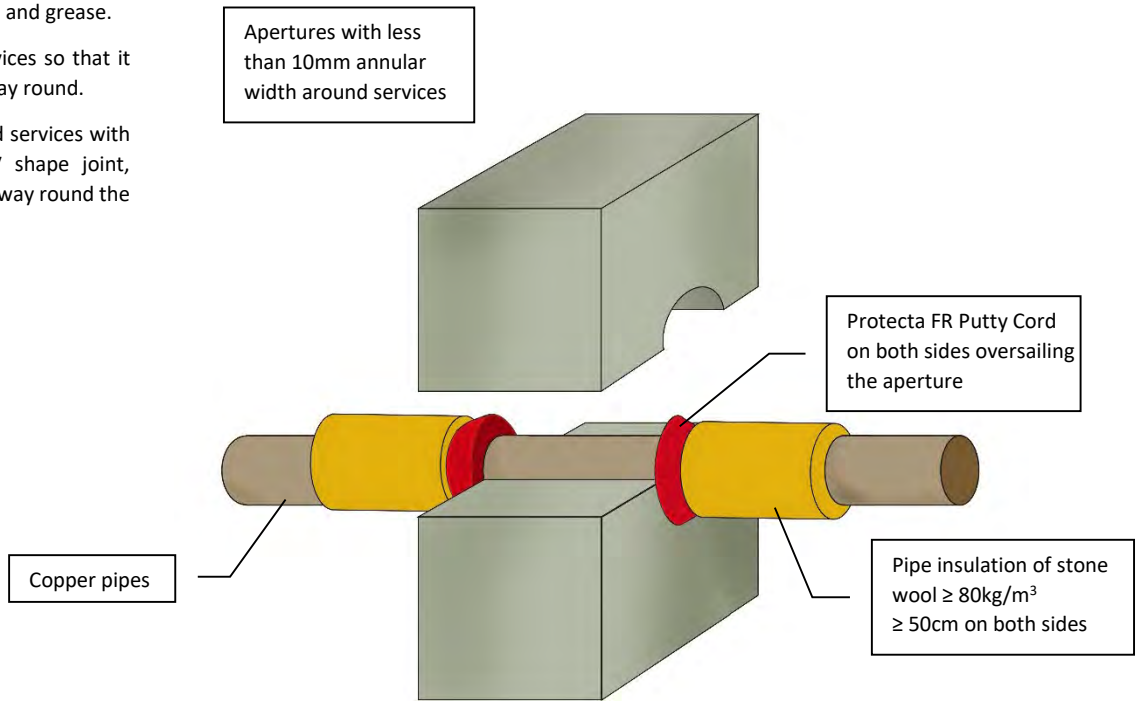

ETA 16/0322

As a part of our policy of on-going product development and testing, we reserve the right to modify, alter or change product specifications without giving notice. All information contained in this document is given in good faith and is provided for guidance only. Any drawings provided are for illustrative purposes only. As Polyseam has no control over the methods or competence of installation and of prevailing site conditions, no warranties, expressed or implied, is intended to be given as to the actual performance of the product mentioned or referred to herein and no liability whatsoever will be accepted for any loss, damage or injury arising from the use of the information given.

For all technical details on the products specified please refer to the technical data sheets that can be found on www.protecta.eu

Signed and approved:

Client:

Job Title:

Products	Protecta FR Putty Cord Ø15mm
Application	Fire stopping of copper pipes in rigid walls
Construction	Minimum wall thickness of 100 mm and comprise concrete, aerated concrete or masonry, with a density of ≥ 650 kg/m³

Fire & Sound classification

Copper pipes ≤ Ø54mm with ≥ 20mm thick pipe insulation

EI 60 C/C & E 90 C/C

Polyseam Ltd, 15 St Andrews Road, Huddersfield, West Yorkshire, HD1 6SB
Tel: +44 (0) 148 4421036
Email: post.uk@polyseam.com

Sheet size: **A4**	Drawn date & no: 29/5/18
Scale: **NTS**	Drawn by: K.B

Installation Instructions

1. Before installing Protecta® FR Putty Cord ensure that the surface of all service penetrations and surrounding construction is wiped clean, dry, free from all loose contaminants, dust, oils and grease.
2. Place the Putty Cord around the services so that it seals the services to the wall all the way round.
3. Press the Putty Cord into the wall and services with your thumbs to form a fillet or V shape joint, ensuring good contact is made all the way round the services and the wall.

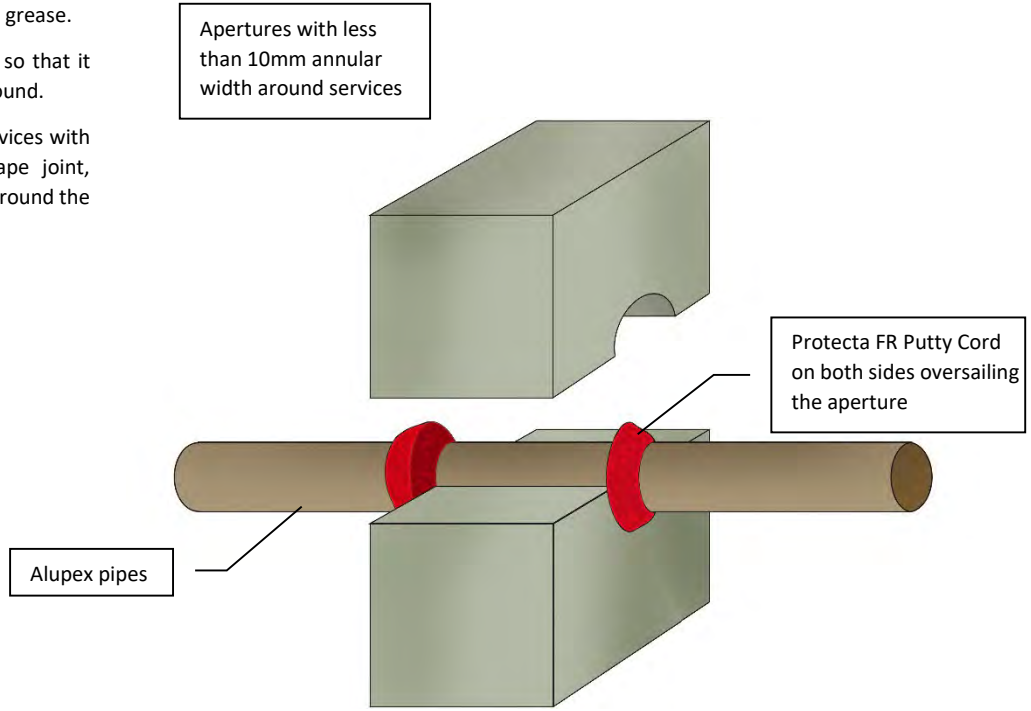

ETA 16/0322

As a part of our policy of on-going product development and testing, we reserve the right to modify, alter or change product specifications without giving notice. All information contained in this document is given in good faith and is provided for guidance only. Any drawings provided are for illustrative purposes only. As Polyseam has no control over the methods or competence of installation and of prevailing site conditions, no warranties, expressed or implied, is intended to be given as to the actual performance of the product mentioned or referred to herein and no liability whatsoever will be accepted for any loss, damage or injury arising from the use of the information given.

For all technical details on the products specified please refer to the technical data sheets that can be found on www.protecta.eu

Signed and approved:

Client:

Job Title:

Products	Protecta FR Putty Cord Ø15mm
Application	Fire stopping of alupex pipes in rigid walls
Construction	Minimum wall thickness of 100 mm and comprise concrete, aerated concrete or masonry, with a density of ≥ 650 kg/m³

Fire & Sound classification

Alupex pipes ≤ Ø 16mm
EI 120 C/C & E 120 C/C

Alupex pipes ≤ Ø 20mm
EI 90 C/C & E 120 C/C

Polyseam Ltd, 15 St Andrews Road, Huddersfield, West Yorkshire, HD1 6SB
Tel: +44 (0) 148 4421036
Email: post.uk@polyseam.com

Sheet size:	Drawn date & no:
A4	11/11/18
Scale:	Drawn by:
NTS	K.B

Installation Instructions

1. For sealing plastic pipes, a pipe collar is installed on both sides of the wall.
2. Before fitting the pipe collar ensure that any gaps between the pipe and the separating element are sealed.
3. Place a pipe collar around the service penetration (pipe) and ensure that the fixing lugs are positioned tightly to the surface of the wall so that the fixings can be inserted fully.
4. Where the surface is uneven, apply a sealing bead of Protecta® FR Acrylic between the wall/floor and the pipe collar.
5. Attach the pipe collar with steel screws or fixings that are suitable for the substrate that the pipe collar will be fitted to. Use ≥ Ø4 x 50mm long masonry screws or expansion bolts.

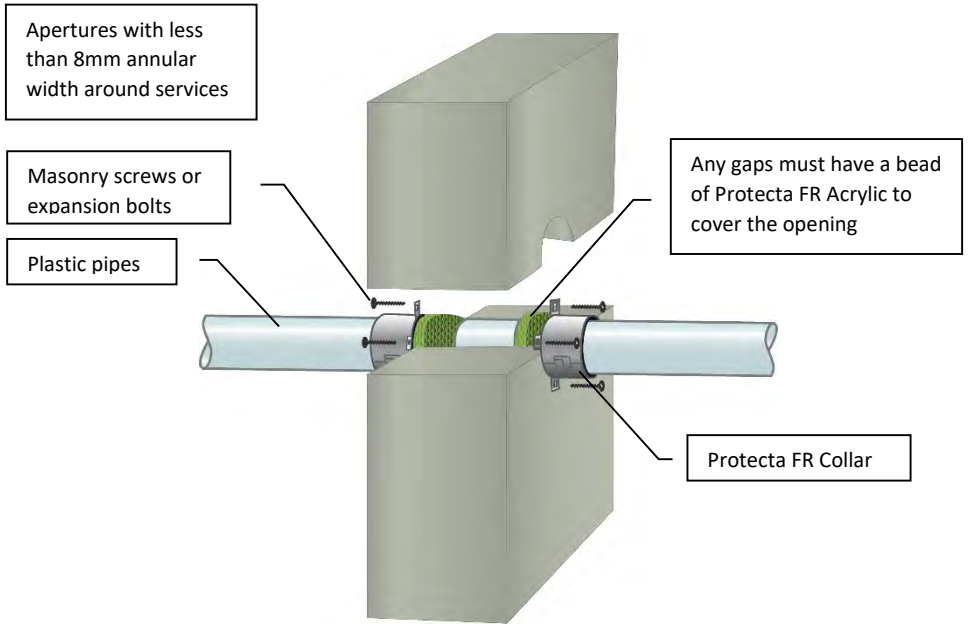

Services	Minimum Collar Height	Classification
≤ Ø110mm PVC-U & PVC-C	30mm	EI 60 C/C, EI 60 U/C
≤ Ø110mm PVC-U & PVC-C	50mm	EI 180 C/C, EI 180 U/C, EI 180 C/U, EI 180 U/U
≤ Ø160mm PVC-U & PVC-C	60mm	EI 240 C/C, EI 240 U/C, EI 240 C/U, EI 240 U/U
Ø315x9.2mm PVC-U & PVC-C	75mm	EI 120 C/C
≤ Ø50mm PE, ABS & SAN+PVC	30mm	EI 60 C/C, EI 60 U/C, EI 45 C/U, EI 45 U/U
≤ Ø50mm PE, ABS & SAN+PVC	50mm	EI 240 C/C, EI 240 U/C, EI 240 C/U, EI 240 U/U
≤ Ø110mm PE, ABS & SAN+PVC	30mm	EI 60 C/C, EI 60 U/C
≤ Ø110mm PE, ABS & SAN+PVC	50mm	EI 180 C/C, EI 180 U/C, EI 180 C/U, EI 180 U/U
≤ Ø160mm PE, ABS & SAN+PVC	60mm	EI 180 C/C, EI 180 U/C, EI 180 C/U, EI 180 U/U
Ø200x18.2mm PE, ABS & SAN+PVC	75mm	EI 60 C/C
Ø250x22.7mm PE, ABS & SAN+PVC	75mm	EI 90 C/C
≤ Ø50mm PP	30mm	EI 240 C/C, EI 240 U/C, EI 240 C/U, EI 240 U/U
≤ Ø110mm PP	30mm	EI 60 C/C, EI 60 U/C
≤ Ø110mm PP	50mm	EI 240 C/C, EI 240 U/C, EI 60 C/U, EI 60 U/U
≤ Ø125mm PP	60mm	EI 180 C/C, EI 180 U/C, EI 60 C/U, EI 60 U/U
≤ Ø160mm PP	60mm	EI 180 C/C, EI 180 U/C, EI 180 C/U, EI 180 U/U

ETA 14/0249

Client:

Job Title:

Products Protecta FR Collar
Protecta FR Acrylic

Application Fire stopping of plastic pipes in rigid walls

Construction Minimum wall thickness of 150 mm and comprise concrete, aerated concrete or masonry, with a density of ≥ 650 kg/m³

Fire & Sound classification

Fire classifications in table on the left.

Sound reduction (seal only)
58dB

Polyseam Ltd, 15 St Andrews Road, Huddersfield, West Yorkshire, HD1 6SB
Tel: +44 (0) 148 4421036
Email: post.uk@polyseam.com

For all technical details on the products specified please refer to the technical data sheets that can be found on www.protecta.eu

Signed and approved:

Sheet size:	Drawn date & no:
A4	24/5/18
Scale:	Drawn by:
NTS	K.B

Installation Instructions

1. Before installing Protecta® FR Putty Cord ensure that the surface of all service penetrations and surrounding construction is wiped clean, dry, free from all loose contaminants, dust, oils and grease.
2. Place the Putty Cord around the services so that it seals the services to the wall all the way round.
3. Press the Putty Cord into the wall and services with your thumbs to form a fillet or V shape joint, ensuring good contact is made all the way round the services and the wall.

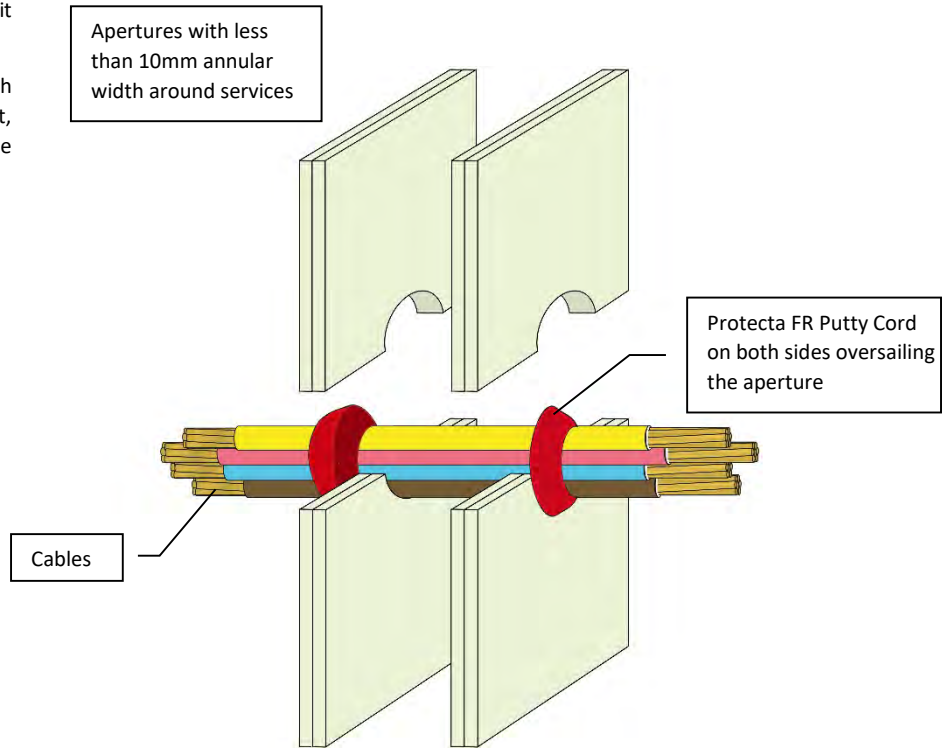

ETA 16/0322

As a part of our policy of on-going product development and testing, we reserve the right to modify, alter or change product specifications without giving notice. All information contained in this document is given in good faith and is provided for guidance only. Any drawings provided are for illustrative purposes only. As Polyseam has no control over the methods or competence of installation and of prevailing site conditions, no warranties, expressed or implied, is intended to be given as to the actual performance of the product mentioned or referred to herein and no liability whatsoever will be accepted for any loss, damage or injury arising from the use of the information given.

For all technical details on the products specified please refer to the technical data sheets that can be found on www.protecta.eu

Signed and approved:

Client:

Job Title:

Products	Protecta FR Putty Cord Ø15mm
Application	Fire stopping of cables in flexible walls
Construction	Minimum wall thickness of 100 mm and comprise steel studs or timber studs* lined on both faces with minimum 2 layers of 12.5 mm thick boards

Fire & Sound classification

Cables ≤ Ø 21mm, single or in a bundle ≤ Ø 50mm
EI 120 & E 120

Cables ≤ Ø 80mm, single or in a bundle ≤ Ø 50mm
EI 60 & E 60

Polyseam Ltd, 15 St Andrews Road, Huddersfield, West Yorkshire, HD1 6SB
Tel: +44 (0) 148 4421036
Email: post.uk@polyseam.com

Sheet size: **A4**	Drawn date & no: 29/5/18
Scale: **NTS**	Drawn by: K.B

Installation Instructions

1. Before installing Protecta® FR Putty Cord ensure that the surface of all service penetrations and surrounding construction is wiped clean, dry, free from all loose contaminants, dust, oils and grease.
2. Place the Putty Cord around the services so that it seals the services to the wall all the way round.
3. Press the Putty Cord into the wall and services with your thumbs to form a fillet or V shape joint, ensuring good contact is made all the way round the services and the wall.

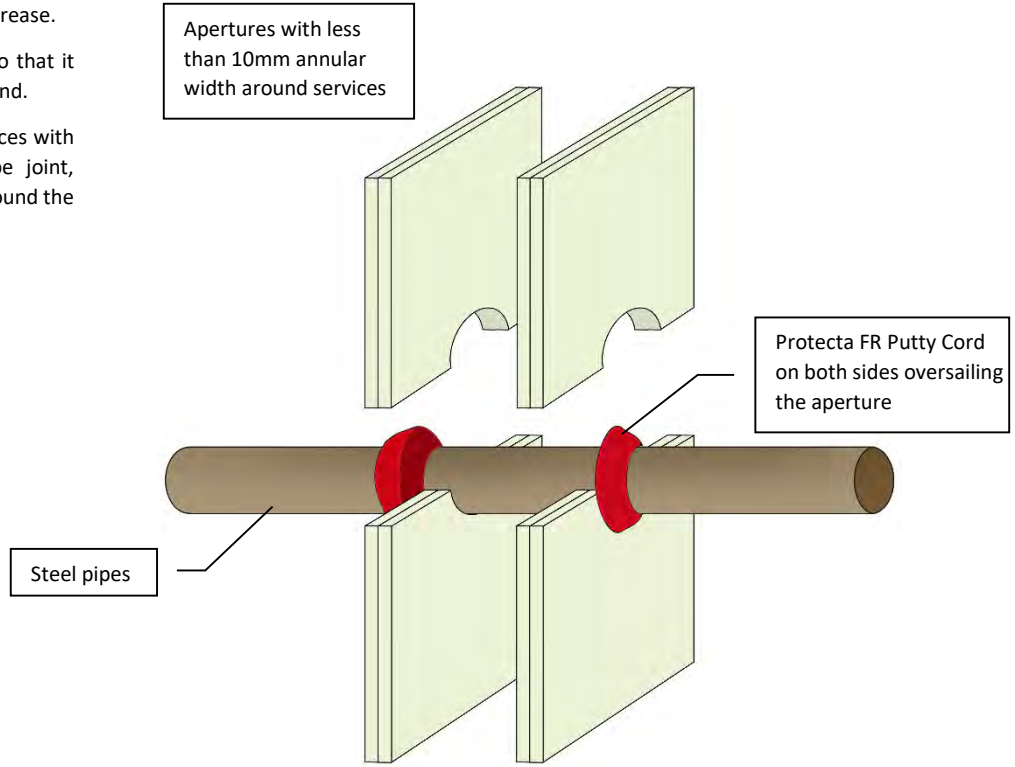

ETA 16/0322

As a part of our policy of on-going product development and testing, we reserve the right to modify, alter or change product specifications without giving notice. All information contained in this document is given in good faith and is provided for guidance only. Any drawings provided are for illustrative purposes only. As Polyseam has no control over the methods or competence of installation and of prevailing site conditions, no warranties, expressed or implied, is intended to be given as to the actual performance of the product mentioned or referred to herein and no liability whatsoever will be accepted for any loss, damage or injury arising from the use of the information given.

For all technical details on the products specified please refer to the technical data sheets that can be found on www.protecta.eu

Signed and approved:

Client:

Job Title:

Products	Protecta FR Putty Cord Ø15mm
Application	Fire stopping of steel pipes in flexible walls
Construction	Minimum wall thickness of 100 mm and comprise steel studs or timber studs* lined on both faces with minimum 2 layers of 12.5 mm thick boards

Fire & Sound classification

Steel pipes ≤ Ø 22mm EI 60 C/U & E 120 C/U

Steel pipes ≤ Ø 30mm EI 45 C/U & E 120 C/U

Polyseam Ltd, 15 St Andrews Road, Huddersfield, West Yorkshire, HD1 6SB
Tel: +44 (0) 148 4421036
Email: post.uk@polyseam.com

Sheet size:	Drawn date & no:
A4	29/5/18
Scale:	Drawn by:
NTS	K.B

Installation Instructions

1. Before installing Protecta® FR Putty Cord ensure that the surface of all service penetrations and surrounding construction is wiped clean, dry, free from all loose contaminants, dust, oils and grease.
2. Place the Putty Cord around the services so that it seals the services to the wall all the way round.
3. Press the Putty Cord into the wall and services with your thumbs to form a fillet or V shape joint, ensuring good contact is made all the way round the services and the wall.

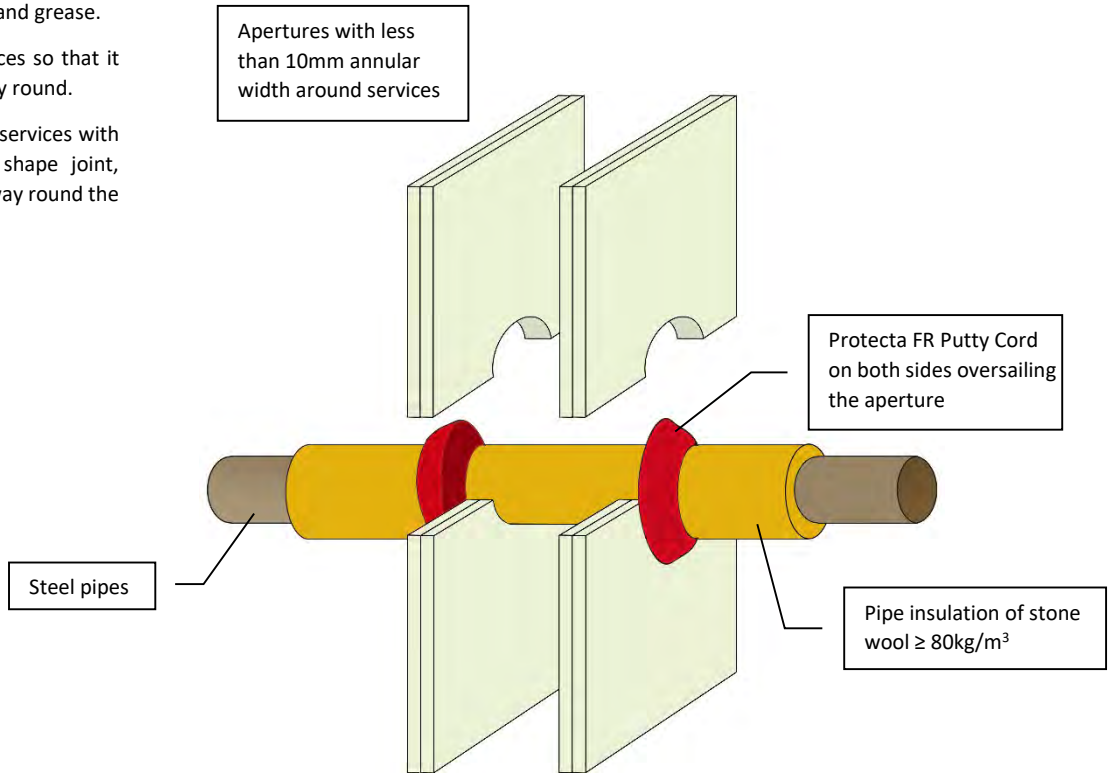

ETA 16/0322

As a part of our policy of on-going product development and testing, we reserve the right to modify, alter or change product specifications without giving notice. All information contained in this document is given in good faith and is provided for guidance only. Any drawings provided are for illustrative purposes only. As Polyseam has no control over the methods or competence of installation and of prevailing site conditions, no warranties, expressed or implied, is intended to be given as to the actual performance of the product mentioned or referred to herein and no liability whatsoever will be accepted for any loss, damage or injury arising from the use of the information given.

For all technical details on the products specified please refer to the technical data sheets that can be found on www.protecta.eu

Signed and approved:

Client:

Job Title:

Products	Protecta FR Putty Cord Ø15mm
Application	Fire stopping of steel pipes in flexible walls
Construction	Minimum wall thickness of 100 mm and comprise steel studs or timber studs* lined on both faces with minimum 2 layers of 12.5 mm thick boards

Fire & Sound classification

Steel pipes ≤ Ø40mm with 20mm thick continuous pipe insulation
EI 120 C/U & E 120 C/U

Steel pipes ≤ Ø324mm with 30-80mm thick continuous pipe insulation
EI 60 C/U & E 90 C/U

Polyseam Ltd, 15 St Andrews Road, Huddersfield, West Yorkshire, HD1 6SB
Tel: +44 (0) 148 4421036
Email: post.uk@polyseam.com

Sheet size: **A4**	Drawn date & no: 29/5/18
Scale: **NTS**	Drawn by: K.B

Installation Instructions

1. Before installing Protecta® FR Putty Cord ensure that the surface of all service penetrations and surrounding construction is wiped clean, dry, free from all loose contaminants, dust, oils and grease.
2. Place the Putty Cord around the services so that it seals the services to the wall all the way round.
3. Press the Putty Cord into the wall and services with your thumbs to form a fillet or V shape joint, ensuring good contact is made all the way round the services and the wall.

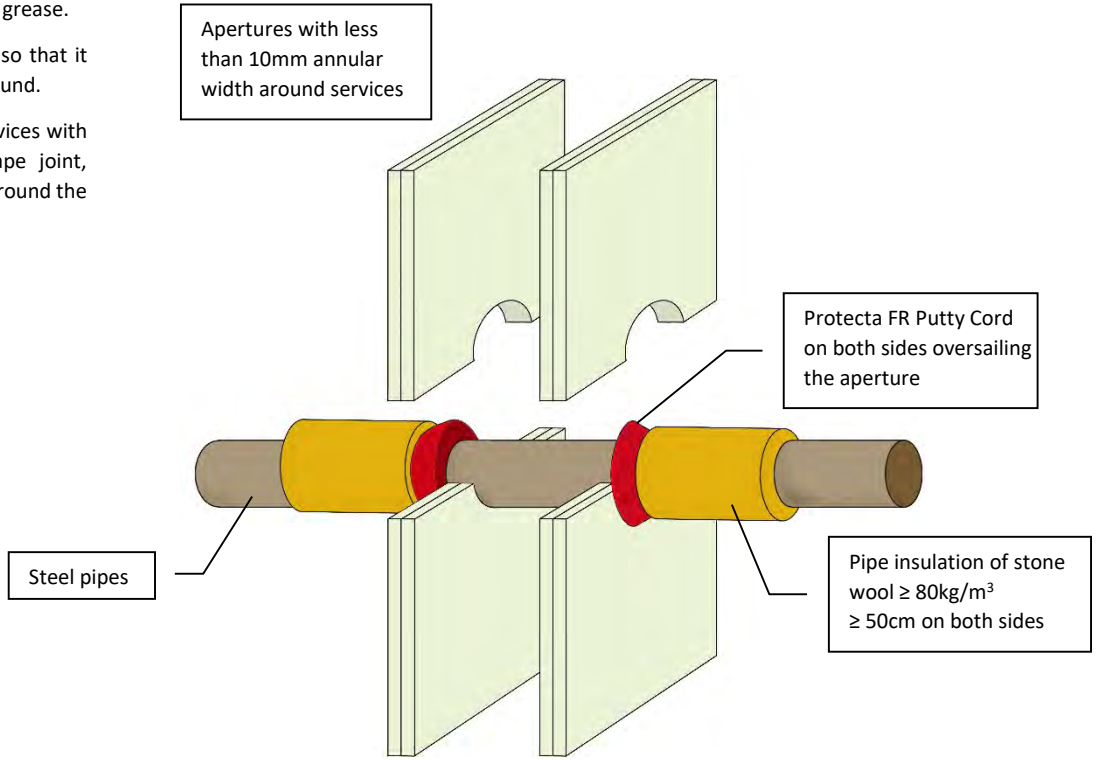

ETA 16/0322

As a part of our policy of on-going product development and testing, we reserve the right to modify, alter or change product specifications without giving notice. All information contained in this document is given in good faith and is provided for guidance only. Any drawings provided are for illustrative purposes only. As Polyseam has no control over the methods or competence of installation and of prevailing site conditions, no warranties, expressed or implied, is intended to be given as to the actual performance of the product mentioned or referred to herein and no liability whatsoever will be accepted for any loss, damage or injury arising from the use of the information given.

For all technical details on the products specified please refer to the technical data sheets that can be found on www.protecta.eu

Signed and approved:

Client:

Job Title:

Products	Protecta FR Putty Cord Ø15mm
Application	Fire stopping of steel pipes in flexible walls
Construction	Minimum wall thickness of 100 mm and comprise steel studs or timber studs* lined on both faces with minimum 2 layers of 12.5 mm thick boards

Fire & Sound classification

Steel pipes ≤ Ø40mm with ≥ 20mm thick pipe insulation

EI 120 C/U & E 120 C/U

Steel pipes ≤ Ø324mm with ≥ 30mm thick pipe insulation

EI 120 C/U & E 120 C/U

Protecta®

Polyseam Ltd, 15 St Andrews Road, Huddersfield, West Yorkshire, HD1 6SB
Tel: +44 (0) 148 4421036
Email: post.uk@polyseam.com

Sheet size: **A4**	Drawn date & no: 11/11/18
Scale: **NTS**	Drawn by: K.B

Installation Instructions

1. Before installing Protecta® FR Putty Cord ensure that the surface of all service penetrations and surrounding construction is wiped clean, dry, free from all loose contaminants, dust, oils and grease.
2. Place the Putty Cord around the services so that it seals the services to the wall all the way round.
3. Press the Putty Cord into the wall and services with your thumbs to form a fillet or V shape joint, ensuring good contact is made all the way round the services and the wall.

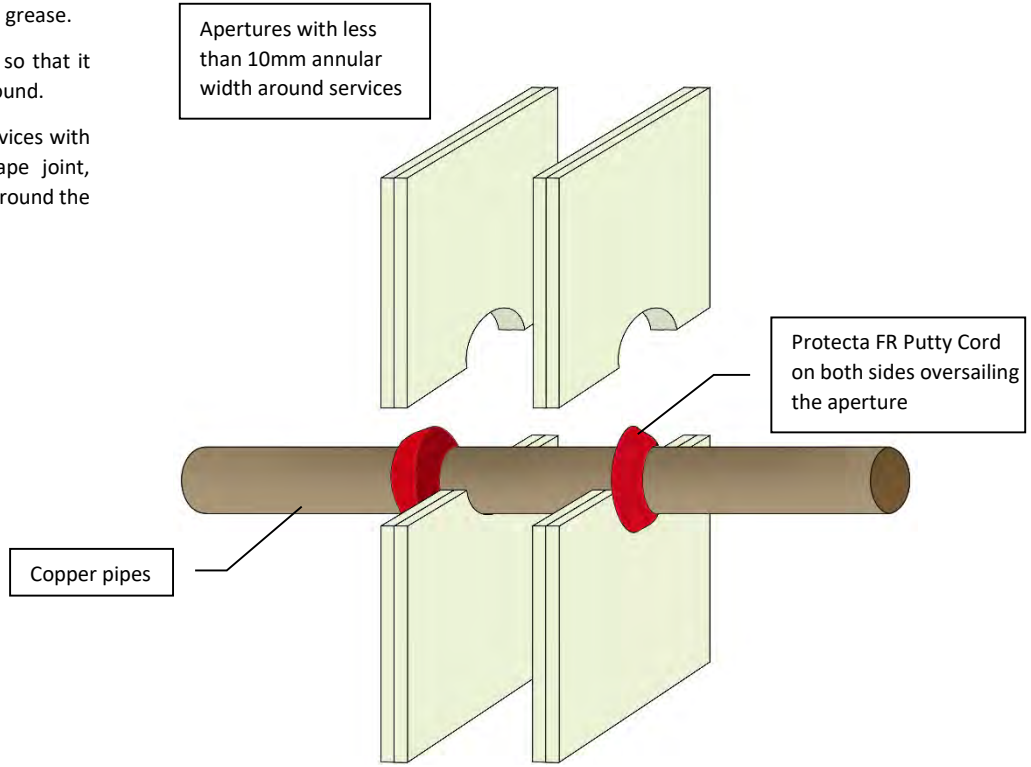

ETA 16/0322

As a part of our policy of on-going product development and testing, we reserve the right to modify, alter or change product specifications without giving notice. All information contained in this document is given in good faith and is provided for guidance only. Any drawings provided are for illustrative purposes only. As Polyseam has no control over the methods or competence of installation and of prevailing site conditions, no warranties, expressed or implied, is intended to be given as to the actual performance of the product mentioned or referred to herein and no liability whatsoever will be accepted for any loss, damage or injury arising from the use of the information given.

For all technical details on the products specified please refer to the technical data sheets that can be found on www.protecta.eu

Signed and approved:

Client:

Job Title:

Products	Protecta FR Putty Cord Ø15mm
Application	Fire stopping of copper pipes in flexible walls
Construction	Minimum wall thickness of 100 mm and comprise steel studs or timber studs* lined on both faces with minimum 2 layers of 12.5 mm thick boards

Fire & Sound classification

Copper pipes ≤ Ø 6mm
EI 120 C/C & E 120 C/C

Copper pipes ≤ Ø 12mm
EI 60 C/C & E 120 C/C

Polyseam Ltd, 15 St Andrews Road, Huddersfield, West Yorkshire, HD1 6SB
Tel: +44 (0) 148 4421036
Email: post.uk@polyseam.com

Sheet size:	Drawn date & no:
A4	29/5/18
Scale:	Drawn by:
NTS	K.B

Installation Instructions

1. Before installing Protecta® FR Putty Cord ensure that the surface of all service penetrations and surrounding construction is wiped clean, dry, free from all loose contaminants, dust, oils and grease.
2. Place the Putty Cord around the services so that it seals the services to the wall all the way round.
3. Press the Putty Cord into the wall and services with your thumbs to form a fillet or V shape joint, ensuring good contact is made all the way round the services and the wall.

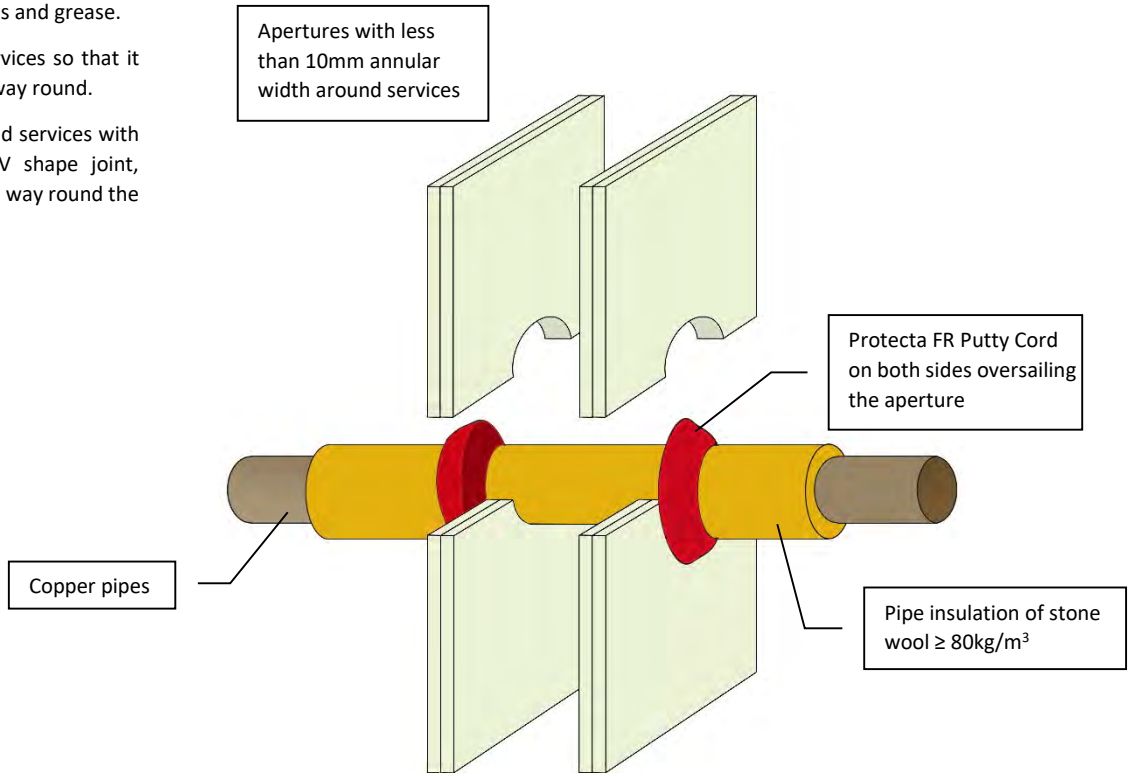

ETA 16/0322

As a part of our policy of on-going product development and testing, we reserve the right to modify, alter or change product specifications without giving notice. All information contained in this document is given in good faith and is provided for guidance only. Any drawings provided are for illustrative purposes only. As Polyseam has no control over the methods or competence of installation and of prevailing site conditions, no warranties, expressed or implied, is intended to be given as to the actual performance of the product mentioned or referred to herein and no liability whatsoever will be accepted for any loss, damage or injury arising from the use of the information given.

For all technical details on the products specified please refer to the technical data sheets that can be found on www.protecta.eu

Signed and approved:

Client:

Job Title:

Products	Protecta FR Putty Cord Ø15mm
Application	Fire stopping of copper pipes in flexible walls
Construction	Minimum wall thickness of 100 mm and comprise steel studs or timber studs* lined on both faces with minimum 2 layers of 12.5 mm thick boards

Fire & Sound classification

Copper pipes ≤ Ø12mm with 20mm thick continuous pipe insulation
EI 60 C/C & E 90 C/C

Copper pipes ≤ Ø54mm with 30-80mm thick continuous pipe insulation
EI 60 C/C & E 90 C/C

Polyseam Ltd, 15 St Andrews Road, Huddersfield, West Yorkshire, HD1 6SB
Tel: +44 (0) 148 4421036
Email: post.uk@polyseam.com

Sheet size: **A4**	Drawn date & no: 11/11/18
Scale: **NTS**	Drawn by: K.B

Installation Instructions

1. Before installing Protecta® FR Putty Cord ensure that the surface of all service penetrations and surrounding construction is wiped clean, dry, free from all loose contaminants, dust, oils and grease.
2. Place the Putty Cord around the services so that it seals the services to the wall all the way round.
3. Press the Putty Cord into the wall and services with your thumbs to form a fillet or V shape joint, ensuring good contact is made all the way round the services and the wall.

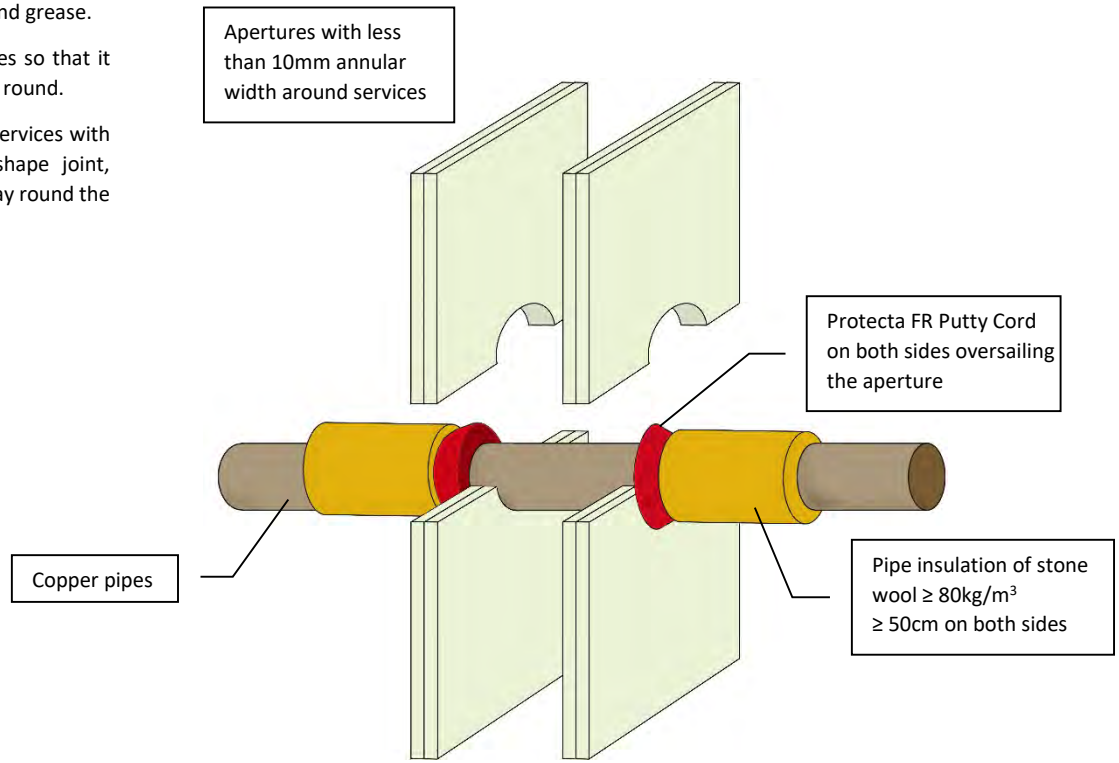

ETA 16/0322

As a part of our policy of on-going product development and testing, we reserve the right to modify, alter or change product specifications without giving notice. All information contained in this document is given in good faith and is provided for guidance only. Any drawings provided are for illustrative purposes only. As Polyseam has no control over the methods or competence of installation and of prevailing site conditions, no warranties, expressed or implied, is intended to be given as to the actual performance of the product mentioned or referred to herein and no liability whatsoever will be accepted for any loss, damage or injury arising from the use of the information given.

For all technical details on the products specified please refer to the technical data sheets that can be found on www.protecta.eu

Signed and approved:

Client:

Job Title:

Products	Protecta FR Putty Cord Ø15mm
Application	Fire stopping of copper pipes in flexible walls
Construction	Minimum wall thickness of 100 mm and comprise steel studs or timber studs* lined on both faces with minimum 2 layers of 12.5 mm thick boards

Fire & Sound classification

Copper pipes ≤ Ø54mm with ≥ 20mm thick pipe insulation

EI 60 C/C & E 90 C/C

Polyseam Ltd, 15 St Andrews Road, Huddersfield, West Yorkshire, HD1 6SB
Tel: +44 (0) 148 4421036
Email: post.uk@polyseam.com

Sheet size: **A4**	Drawn date & no: 29/5/18
Scale: **NTS**	Drawn by: K.B

Installation Instructions

1. Before installing Protecta® FR Putty Cord ensure that the surface of all service penetrations and surrounding construction is wiped clean, dry, free from all loose contaminants, dust, oils and grease.
2. Place the Putty Cord around the services so that it seals the services to the wall all the way round.
3. Press the Putty Cord into the wall and services with your thumbs to form a fillet or V shape joint, ensuring good contact is made all the way round the services and the wall.

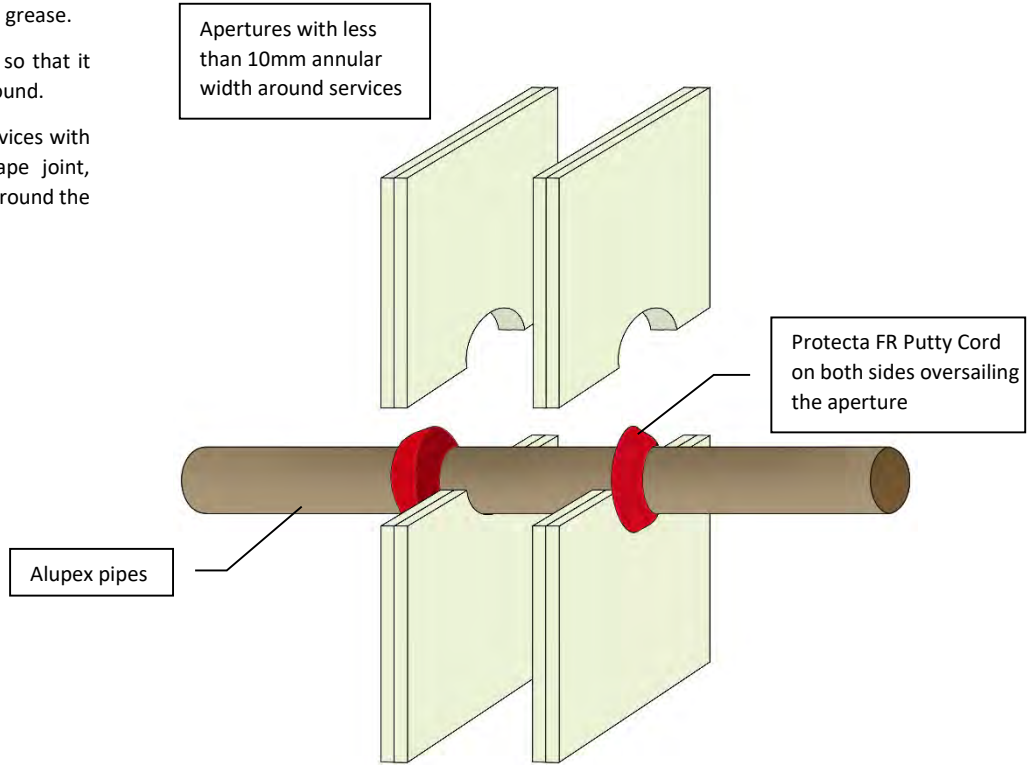

ETA 16/0322

As a part of our policy of on-going product development and testing, we reserve the right to modify, alter or change product specifications without giving notice. All information contained in this document is given in good faith and is provided for guidance only. Any drawings provided are for illustrative purposes only. As Polyseam has no control over the methods or competence of installation and of prevailing site conditions, no warranties, expressed or implied, is intended to be given as to the actual performance of the product mentioned or referred to herein and no liability whatsoever will be accepted for any loss, damage or injury arising from the use of the information given.

For all technical details on the products specified please refer to the technical data sheets that can be found on www.protecta.eu

Signed and approved:

Client:

Job Title:

Products	Protecta FR Putty Cord Ø15mm
Application	Fire stopping of alupex pipes in flexible walls
Construction	Minimum wall thickness of 100 mm and comprise steel studs or timber studs* lined on both faces with minimum 2 layers of 12.5 mm thick boards

Fire & Sound classification

Alupex pipes ≤ Ø 16mm
EI 120 C/C & E 120 C/C

Alupex pipes ≤ Ø 20mm
EI 90 C/C & E 120 C/C

Polyseam Ltd, 15 St Andrews Road, Huddersfield, West Yorkshire, HD1 6SB
Tel: +44 (0) 148 4421036
Email: post.uk@polyseam.com

Sheet size:	Drawn date & no:
A4	11/11/18
Scale:	Drawn by:
NTS	K.B

Installation Instructions

1. For sealing plastic pipes, a pipe collar is installed on both sides of the wall.
2. Before fitting the pipe collar ensure that any gaps between the pipe and the separating element are sealed.
3. Place a pipe collar around the service penetration (pipe) and ensure that the fixing lugs are positioned tightly to the surface of the wall so that the anchors/fixings can be inserted fully.
4. Where the surface is uneven, apply a sealing bead of Protecta® FR Acrylic between the wall and the pipe collar.
5. Attach the pipe collar with steel screws, anchors or fixings that are suitable for the substrate that the pipe collar will be fitted to. Use ≥ Ø4 mm gypsum-, wood screws or anchors with a length suitable for the number of boards that form the wall.

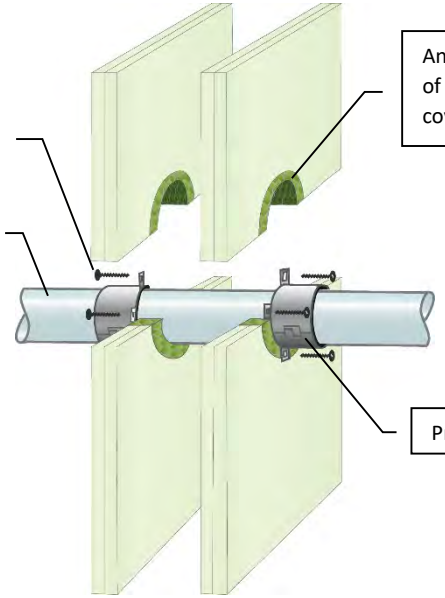

Services	Minimum Collar Height	Classification
≤ Ø50mm PVC-U & PVC-C	30mm	EI 60 C/C, EI 60 U/C, EI 60 C/U, EI 60 U/U
≤ Ø110mm PVC-U & PVC-C	30mm	EI 60 C/C, EI 60 U/C
≤ Ø110mm PVC-U & PVC-C	50mm	EI 60 C/C, EI 60 U/C, EI 60 C/U, EI 60 U/U
≤ Ø160mm PVC-U & PVC-C	60mm	EI 60 C/C, EI 60 U/C, EI 60 C/U, EI 60 U/U
Ø315x9.2mm PVC-U & PVC-C	75mm	EI 60 C/C
≤ Ø50mm PE, ABS & SAN+PVC	30mm	EI 60 C/C, EI 60 U/C, EI 45 C/U, EI 45 U/U
≤ Ø90mm PE, ABS & SAN+PVC	50mm	EI 60 C/C, EI 60 U/C, EI 45 C/U, EI 45 U/U
≤ Ø110mm PE, ABS & SAN+PVC	30mm	EI 60 C/C, EI 60 U/C
≤ Ø110mm PE, ABS & SAN+PVC	50mm	EI 60 C/C, EI 60 U/C, EI 60 C/U, EI 60 U/U
≤ Ø140mm PE, ABS & SAN+PVC	60mm	EI 60 C/C, EI 60 U/C, EI 60 C/U, EI 60 U/U
≤ Ø160mm PE, ABS & SAN+PVC	60mm	EI 90 C/C, EI 90 U/C, EI 90 C/U, EI 90 U/U
Ø200x18.2mm PE, ABS & SAN+PVC	75mm	EI 60 C/C
Ø250x22.7mm PE, ABS & SAN+PVC	75mm	EI 60 C/C
≤ Ø50mm PP	30mm	EI 60 C/C, EI 60 U/C, EI 60 C/U, EI 60 U/U
≤ Ø110mm PP	30mm	EI 60 C/C, EI 60 U/C
≤ Ø110mm PP	50mm	EI 60 C/C, EI 60 U/C, EI 60 C/U, EI 60 U/U
≤ Ø160mm PP	60mm	EI 60 C/C, EI 60 U/C, EI 60 C/U, EI 60 U/U

ETA 14/0249

Client:

Job Title:

Products Protecta FR Collar
Protecta FR Acrylic

Application Fire stopping of plastic pipes in flexible walls

Construction Minimum wall thickness of 100 mm and comprise steel studs or timber studs* lined on both faces with minimum 2 layers of 12.5 mm thick boards

Fire & Sound classification

Fire classifications in table on the left.

Sound reduction (seal only) 58dB

Polyseam Ltd, 15 St Andrews Road, Huddersfield, West Yorkshire, HD1 6SB
Tel: +44 (0) 148 4421036
Email: post.uk@polyseam.com

For all technical details on the products specified please refer to the technical data sheets that can be found on www.protecta.eu

Signed and approved:

Sheet size:	Drawn date & no:
A4	24/5/18
Scale:	Drawn by:
NTS	K.B

Appendix III

-

Service penetration solutions with gaps ≥ 10mm and ≤ 30mm

Installation Instructions

1. Before installing Protecta® FR Acrylic ensure that the surface of all service penetrations and surrounding construction is free from all loose contaminants, dust and grease.
2. Where Protecta® FR Acrylic is to be installed against surfaces that cannot tolerate direct contact; appropriate surface preparation should be made (contact Polyseam for guidance in these cases). For paints sensitive to sealing compounds, priming with a PVA primer is recommended.
3. When installing Protecta® FR Acrylic in hollow floor slabs or boards, fire seals specified as single sided should be installed from the soffit side of the floor assuming there is sufficient thickness of concrete below the void to follow the installation guide. Where this is not the case, tubular voids should be filled with stone wool normally the same thickness as the depth of the floor slab. Alternatively, simply fire seal on both sides.
4. When installing any backing material, cut this slightly oversize and insert into the gap ensuring a tight friction fit. Ensure correct depth is achieved.
5. Fill the gap or joint with Protecta® FR Acrylic to the required depth.
6. Apply the sealant generously to prevent air bubbles. Finish the bead with a moist spatula, pallet knife or brush.
7. Protecta® FR Acrylic can be over-painted with most emulsion or alkyd (gloss) paints.

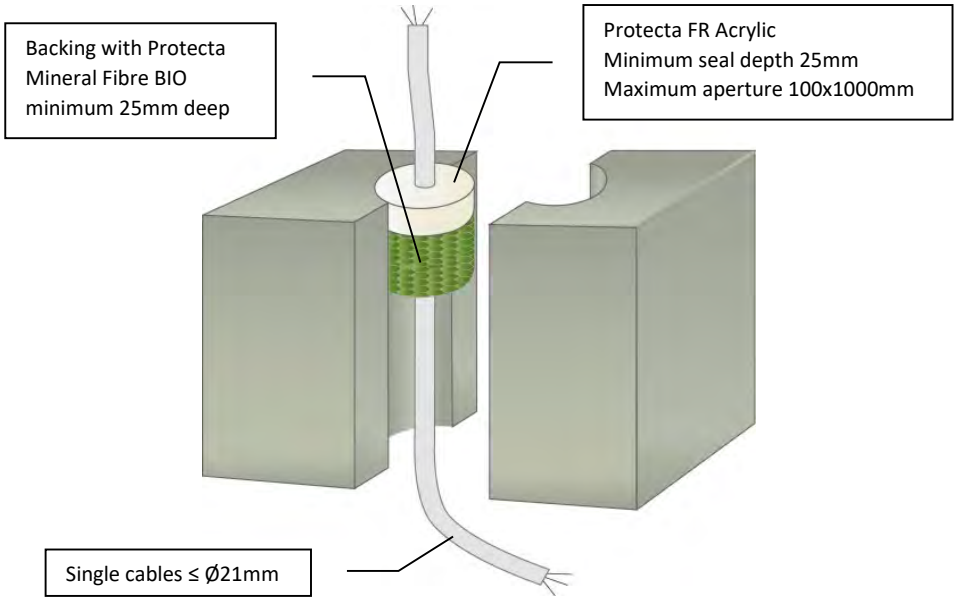

ETA 13/0879 & 13/0880

As a part of our policy of on-going product development and testing, we reserve the right to modify, alter or change product specifications without giving notice. All information contained in this document is given in good faith and is provided for guidance only. Any drawings provided are for illustrative purposes only. As Polyseam has no control over the methods or competence of installation and of prevailing site conditions, no warranties, expressed or implied, is intended to be given as to the actual performance of the product mentioned or referred to herein and no liability whatsoever will be accepted for any loss, damage or injury arising from the use of the information given.

For all technical details on the products specified please refer to the technical data sheets that can be found on www.protecta.eu

Signed and approved:

Client:

Job Title:

Products	Protecta FR Acrylic Protecta Mineral Fibre BIO
Application	Fire stopping of cables in rigid floors
Construction	Minimum floor thickness of 150 mm and comprise aerated concrete or concrete with a minimum density of 650kg/m^3.

Fire & Sound classification

Single sided seal top or soffit face position EI 60 & E 120

Sound reduction (seal only) 62 dB

Protecta®

Polyseam Ltd, 15 St Andrews Road, Huddersfield, West Yorkshire, HD1 6SB
Tel: +44 (0) 148 4421036
Email: post.uk@polyseam.com

Sheet size: **A4**	Drawn date & no: 4/3/15
Scale: **NTS**	Drawn by: K.B

Installation Instructions

1. Before installing Protecta® FR Acrylic ensure that the surface of all service penetrations and surrounding construction is free from all loose contaminants, dust and grease.
2. Where Protecta® FR Acrylic is to be installed against surfaces that cannot tolerate direct contact; appropriate surface preparation should be made (contact Polyseam for guidance in these cases). For paints sensitive to sealing compounds, priming with a PVA primer is recommended.
3. When installing Protecta® FR Acrylic in hollow floor slabs or boards, tubular voids should be filled with stone wool normally the same thickness as the depth of the floor slab. Alternatively, simply fire seal on both sides.
4. When installing any backing material, cut this slightly oversize and insert into the gap ensuring a tight friction fit. Ensure correct depth is achieved.
5. Fill the gap or joint with Protecta® FR Acrylic to the required depth.
6. Apply the sealant generously to prevent air bubbles. Finish the bead with a moist spatula, pallet knife or brush.
7. Protecta® FR Acrylic can be over-painted with most emulsion or alkyd (gloss) paints.

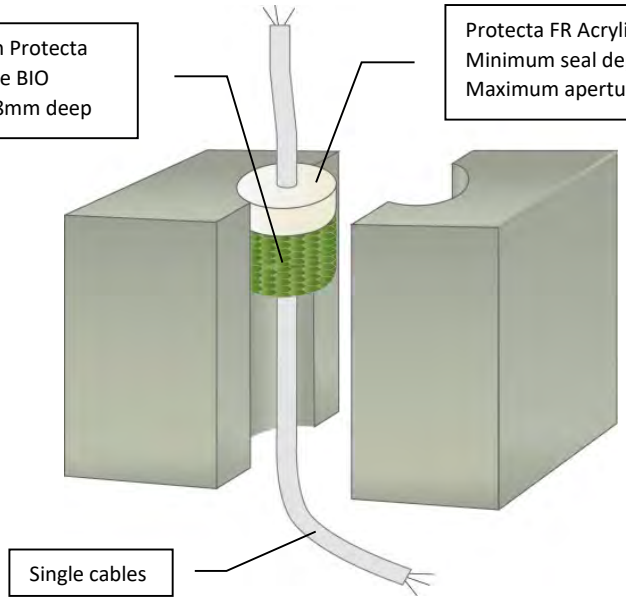

ETA 13/0879 & 13/0880

As a part of our policy of on-going product development and testing, we reserve the right to modify, alter or change product specifications without giving notice. All information contained in this document is given in good faith and is provided for guidance only. Any drawings provided are for illustrative purposes only. As Polyseam has no control over the methods or competence of installation and of prevailing site conditions, no warranties, expressed or implied, is intended to be given as to the actual performance of the product mentioned or referred to herein and no liability whatsoever will be accepted for any loss, damage or injury arising from the use of the information given.

For all technical details on the products specified please refer to the technical data sheets that can be found on www.protecta.eu

Signed and approved:

Client:

Job Title:

Products	Protecta FR Acrylic Protecta Mineral Fibre BIO
Application	Fire stopping of cables in rigid floors
Construction	Minimum floor thickness of 150 mm and comprise aerated concrete or concrete with a minimum density of 650kg/m^3.

Fire & Sound classification

Single cables ≤ Ø21mm single sided seal top face position
EI 90 & E 120

Single cables Ø23-27mm 1x185mm^2 core with PVC sheath single sided seal top face position
EI 240 & E 240

Sound reduction (seal only)
62 dB

Protecta®

Polyseam Ltd, 15 St Andrews Road, Huddersfield, West Yorkshire, HD1 6SB
Tel: +44 (0) 148 4421036
Email: post.uk@polyseam.com

Sheet size: **A4**	Drawn date & no: 4/3/15
Scale: **NTS**	Drawn by: K.B

Installation Instructions

1. Before installing Protecta® FR Acrylic ensure that the surface of all service penetrations and surrounding construction is free from all loose contaminants, dust and grease.
2. Where Protecta® FR Acrylic is to be installed against surfaces that cannot tolerate direct contact; appropriate surface preparation should be made (contact Polyseam for guidance in these cases). For paints sensitive to sealing compounds, priming with a PVA primer is recommended.
3. When installing any backing material, cut this slightly oversize and insert into the gap ensuring a tight friction fit. Ensure correct depth is achieved.
4. Fill the gap or joint with Protecta® FR Acrylic to the required depth.
5. Apply the sealant generously to prevent air bubbles. Finish the bead with a moist spatula, pallet knife or brush.
6. Protecta® FR Acrylic can be over-painted with most emulsion or alkyd (gloss) paints.

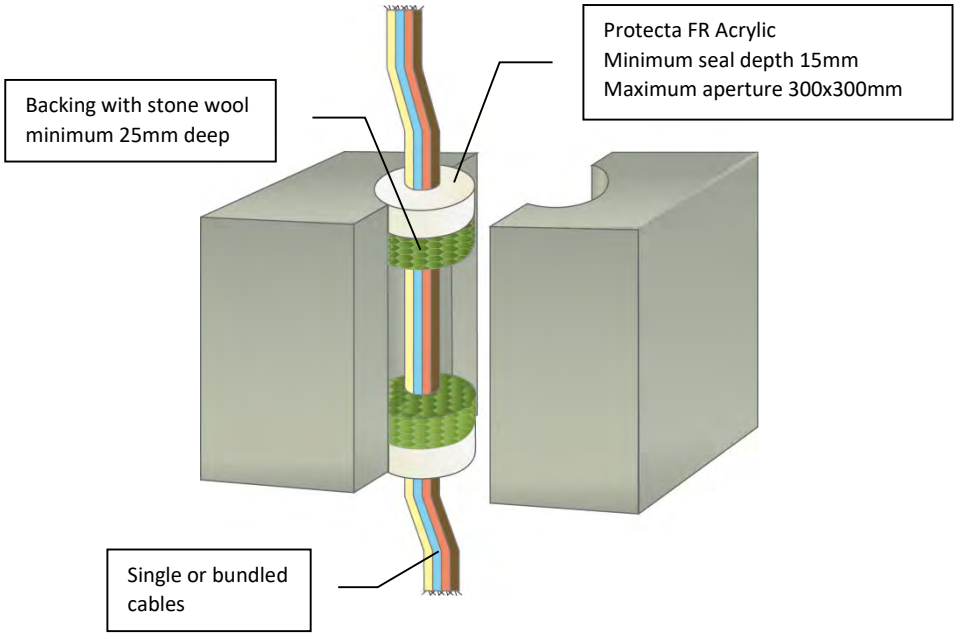

ETA 13/0879 & 13/0880

As a part of our policy of on-going product development and testing, we reserve the right to modify, alter or change product specifications without giving notice. All information contained in this document is given in good faith and is provided for guidance only. Any drawings provided are for illustrative purposes only. As Polyseam has no control over the methods or competence of installation and of prevailing site conditions, no warranties, expressed or implied, is intended to be given as to the actual performance of the product mentioned or referred to herein and no liability whatsoever will be accepted for any loss, damage or injury arising from the use of the information given.

For all technical details on the products specified please refer to the technical data sheets that can be found on www.protecta.eu

Signed and approved:

Client:

Job Title:

Products	Protecta FR Acrylic Stone wool
Application	Fire stopping of cables in rigid floors
Construction	Minimum floor thickness of 150 mm and comprise aerated concrete or concrete with a minimum density of 650kg/m³.

Fire & Sound classification

Cables ≤ Ø21mm single or in a bundle
EI 120 & E 120

Cables ≤ Ø50mm single or in a bundle
EI 90 & E 120

Cables ≤ Ø80mm single or in a bundle
EI 60 & E 120

Sound reduction (seal only)
62 dB

Protecta®

Polyseam Ltd, 15 St Andrews Road,
Huddersfield, West Yorkshire, HD1 6SB
Tel: +44 (0) 148 4421036
Email: post.uk@polyseam.com

Sheet size: **A4**	Drawn date & no: 4/3/15
Scale: **NTS**	Drawn by: K.B

Installation Instructions

1. Before installing Protecta® FR Acrylic ensure that the surface of all service penetrations and surrounding construction is free from all loose contaminants, dust and grease.
2. Where Protecta® FR Acrylic is to be installed against surfaces that cannot tolerate direct contact; appropriate surface preparation should be made (contact Polyseam for guidance in these cases). For paints sensitive to sealing compounds, priming with a PVA primer is recommended.
3. As Protecta® FR Acrylic is water based, in cases where corrosion protection is a problem; some metals may require a barrier between the sealant and the metal surface prior to this installation.
4. When installing any backing material, cut this slightly oversize and insert into the gap ensuring a tight friction fit. Ensure correct depth is achieved.
5. Fill the gap or joint with Protecta® FR Acrylic to the required depth.
6. Apply the sealant generously to prevent air bubbles. Finish the bead with a moist spatula, pallet knife or brush.
7. Protecta® FR Acrylic can be over-painted with most emulsion or alkyd (gloss) paints.

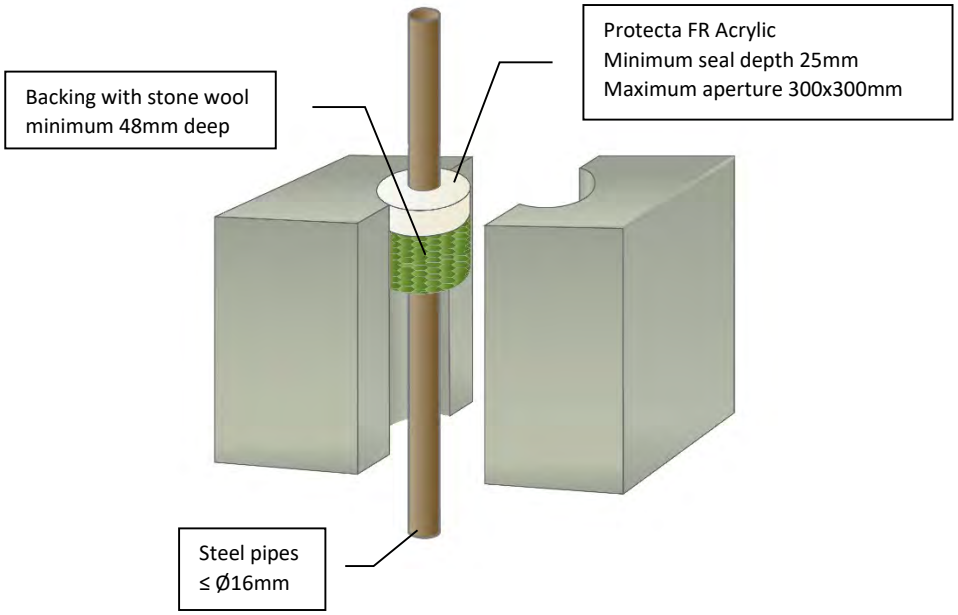

ETA 13/0879 & 13/0880

As a part of our policy of on-going product development and testing, we reserve the right to modify, alter or change product specifications without giving notice. All information contained in this document is given in good faith and is provided for guidance only. Any drawings provided are for illustrative purposes only. As Polyseam has no control over the methods or competence of installation and of prevailing site conditions, no warranties, expressed or implied, is intended to be given as to the actual performance of the product mentioned or referred to herein and no liability whatsoever will be accepted for any loss, damage or injury arising from the use of the information given.

For all technical details on the products specified please refer to the technical data sheets that can be found on www.protecta.eu

Signed and approved:

Client:

Job Title:

Products	Protecta FR Acrylic Stone wool
Application	Fire stopping of steel pipes in rigid floors
Construction	Minimum floor thickness of 150 mm and comprise aerated concrete or concrete with a minimum density of 650kg/m³.

Fire & Sound classification

Single sided seal top face
EI 120 C/U & E 120 C/U

Sound reduction (seal only)
62 dB

Polyseam Ltd, 15 St Andrews Road,
Huddersfield, West Yorkshire, HD1 6SB
Tel: +44 (0) 148 4421036
Email: post.uk@polyseam.com

Sheet size: **A4**	Drawn date & no: 9/4/18
Scale: **NTS**	Drawn by: K.B

Installation Instructions

1. Before installing Protecta® FR Acrylic ensure that the surface of all service penetrations and surrounding construction is free from all loose contaminants, dust and grease.
2. Where Protecta® FR Acrylic is to be installed against surfaces that cannot tolerate direct contact; appropriate surface preparation should be made (contact Polyseam for guidance in these cases). For paints sensitive to sealing compounds, priming with a PVA primer is recommended.
3. As Protecta® FR Acrylic is water based, in cases where corrosion protection is a problem; some metals may require a barrier between the sealant and the metal surface prior to this installation.
4. When installing any backing material, cut this slightly oversize and insert into the gap ensuring a tight friction fit. Ensure correct depth is achieved.
5. Fill the gap or joint with Protecta® FR Acrylic to the required depth.
6. Apply the sealant generously to prevent air bubbles. Finish the bead with a moist spatula, pallet knife or brush.
7. Protecta® FR Acrylic can be over-painted with most emulsion or alkyd (gloss) paints.

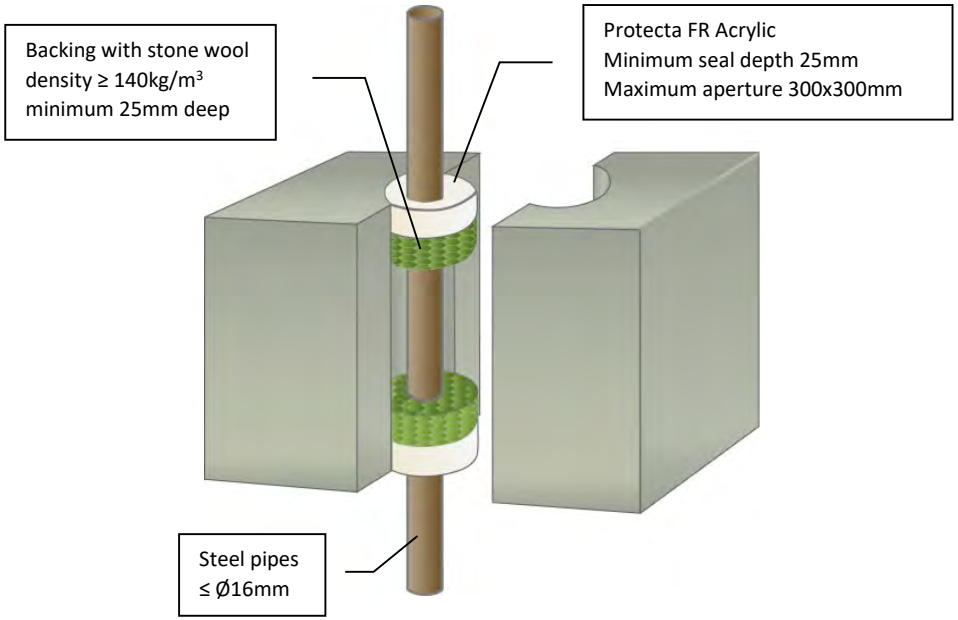

ETA 13/0879 & 13/0880

As a part of our policy of on-going product development and testing, we reserve the right to modify, alter or change product specifications without giving notice. All information contained in this document is given in good faith and is provided for guidance only. Any drawings provided are for illustrative purposes only. As Polyseam has no control over the methods or competence of installation and of prevailing site conditions, no warranties, expressed or implied, is intended to be given as to the actual performance of the product mentioned or referred to herein and no liability whatsoever will be accepted for any loss, damage or injury arising from the use of the information given.

For all technical details on the products specified please refer to the technical data sheets that can be found on www.protecta.eu

Signed and approved:

Client:

Job Title:

Products	Protecta FR Acrylic Stone wool
Application	Fire stopping of steel pipes in rigid floors
Construction	Minimum floor thickness of 150 mm and comprise aerated concrete or concrete with a minimum density of 650kg/m³.

Fire & Sound classification

Double sided seal
EI 240 C/U & E 240 C/U

Sound reduction (seal only)
62 dB

Polyseam Ltd, 15 St Andrews Road,
Huddersfield, West Yorkshire, HD1 6SB
Tel: +44 (0) 148 4421036
Email: post.uk@polyseam.com

Sheet size: **A4**	Drawn date & no: 4/3/15
Scale: **NTS**	Drawn by: K.B

Installation Instructions

1. Before installing Protecta® FR Acrylic ensure that the surface of all service penetrations and surrounding construction is free from all loose contaminants, dust and grease.
2. Where Protecta® FR Acrylic is to be installed against surfaces that cannot tolerate direct contact; appropriate surface preparation should be made (contact Polyseam for guidance in these cases). For paints sensitive to sealing compounds, priming with a PVA primer is recommended.
3. When installing any backing material, cut this slightly oversize and insert into the gap ensuring a tight friction fit. Ensure correct depth is achieved.
4. Fill the gap or joint with Protecta® FR Acrylic to the required depth.
5. Apply the sealant generously to prevent air bubbles. Finish the bead with a moist spatula, pallet knife or brush.
6. Protecta® FR Acrylic can be over-painted with most emulsion or alkyd (gloss) paints..

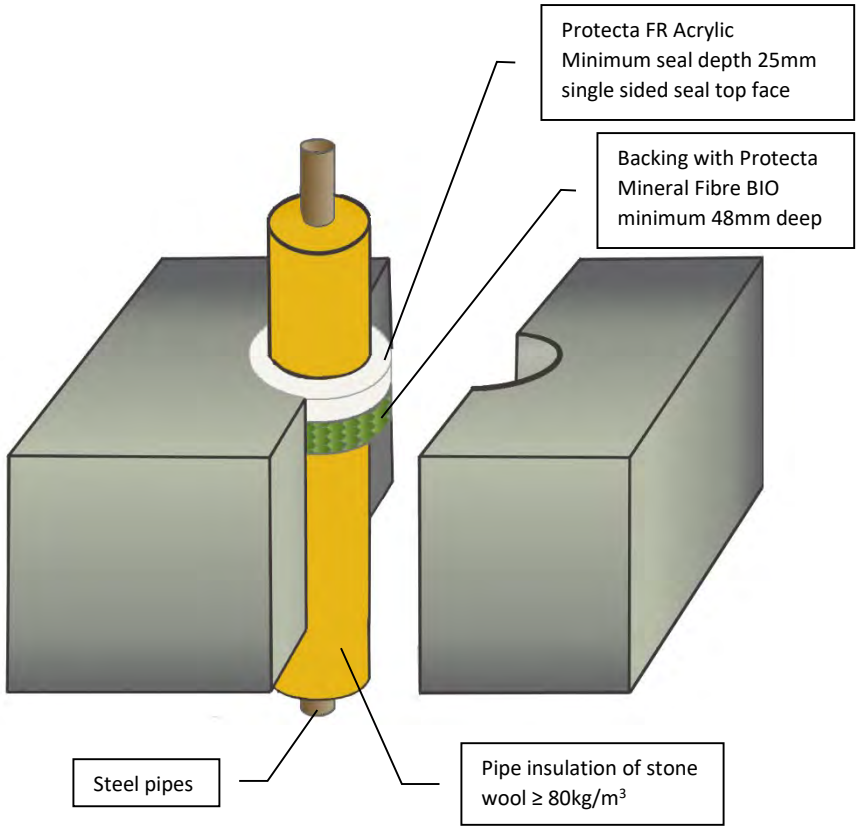

ETA 13/0879 & 13/0880

As a part of our policy of on-going product development and testing, we reserve the right to modify, alter or change product specifications without giving notice. All information contained in this document is given in good faith and is provided for guidance only. Any drawings provided are for illustrative purposes only. As Polyseam has no control over the methods or competence of installation and of prevailing site conditions, no warranties, expressed or implied, is intended to be given as to the actual performance of the product mentioned or referred to herein and no liability whatsoever will be accepted for any loss, damage or injury arising from the use of the information given.

For all technical details on the products specified please refer to the technical data sheets that can be found on www.protecta.eu

Signed and approved:

Client:

Job Title:

Products	Protecta FR Acrylic Protecta Mineral Fibre BIO
Application	Fire stopping of steel pipes in rigid floors
Construction	Minimum floor thickness of 150 mm and comprise aerated concrete or concrete with a minimum density of 650kg/m³.

Fire & Sound classification

Steel pipes ≤ Ø324mm with 20-80mm thick continuous pipe insulation in maximum aperture 300x300mm or Ø505mm
EI 240 C/U & E 240 C/U

Sound reduction (seal only)
62dB

Protecta®

Polyseam Ltd, 15 St Andrews Road,
Huddersfield, West Yorkshire, HD1 6SB
Tel: +44 (0) 148 4421036
Email: post.uk@polyseam.com

Sheet size: **A4**	Drawn date & no: 20/1/17
Scale: **NTS**	Drawn by: K.B

Installation Instructions

1. Before installing Protecta® FR Acrylic ensure that the surface of all service penetrations and surrounding construction is free from all loose contaminants, dust and grease.
2. Where Protecta® FR Acrylic is to be installed against surfaces that cannot tolerate direct contact; appropriate surface preparation should be made (contact Polyseam for guidance in these cases). For paints sensitive to sealing compounds, priming with a PVA primer is recommended.
3. As Protecta® FR Acrylic is water based, in cases where corrosion protection is a problem; some metals may require a barrier between the sealant and the metal surface prior to this installation.
4. When installing Protecta® FR Acrylic in hollow floor slabs or boards, fire seals specified as single sided should be installed from the soffit side of the floor assuming there is sufficient thickness of concrete below the void to follow the installation guide. Where this is not the case, tubular voids should be filled with stone wool normally the same thickness as the depth of the floor slab. Alternatively, simply fire seal on both sides.
5. When installing any backing material, cut this slightly oversize and insert into the gap ensuring a tight friction fit. Ensure correct depth is achieved.
6. Fill the gap or joint with Protecta® FR Acrylic to the required depth.
7. Apply the sealant generously to prevent air bubbles. Finish the bead with a moist spatula, pallet knife or brush.
8. Protecta® FR Acrylic can be over-painted with most emulsion or alkyd (gloss) paints.

ETA 13/0879 & 13/0880

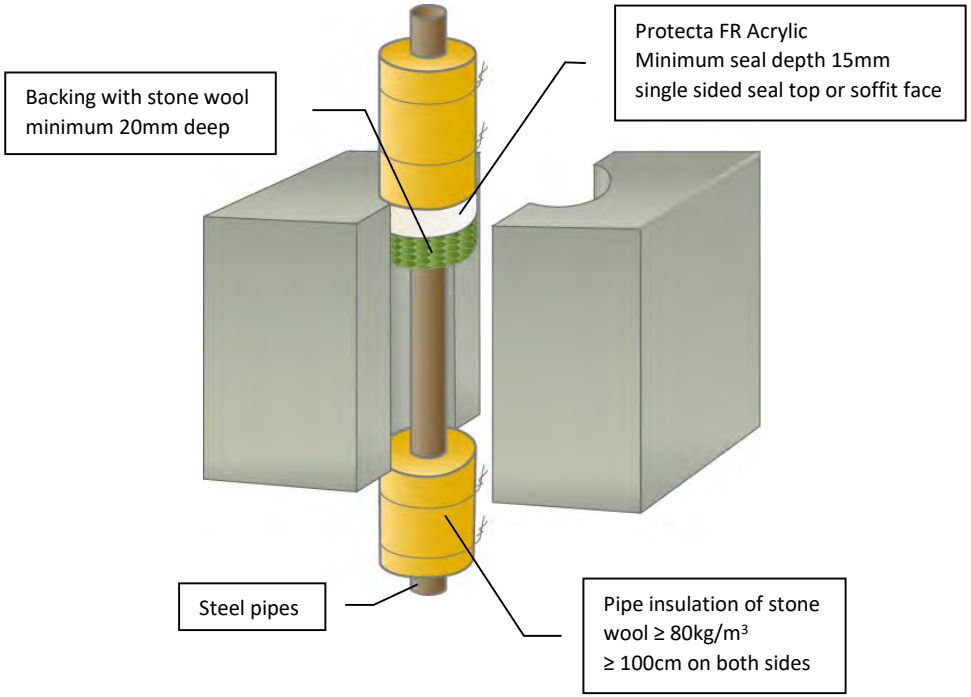

Client:

Job Title:

Products	Protecta FR Acrylic Stone wool
Application	Fire stopping of steel pipes in rigid floors
Construction	Minimum floor thickness of 150 mm and comprise aerated concrete or concrete with a minimum density of 650kg/m³.

Fire & Sound classification

Steel pipes ≤ Ø40mm with ≥ 20mm thick pipe insulation in maximum aperture 300x300mm
EI 60 C/U & E 90 C/U

Steel pipes ≤ Ø40mm with ≥ 20mm thick pipe insulation in maximum aperture pipe Ø + 20mm
EI 240 C/U & E 240 C/U

Steel pipes ≤ Ø219mm with ≥ 30mm thick pipe insulation in maximum aperture 300x300mm
EI 60 C/U & E 90 C/U

Steel pipes ≤ Ø219mm with ≥ 30mm thick pipe insulation in maximum aperture pipe + Ø 20mm
EI 90 C/U & E 240 C/U

Sound reduction (seal only) 62dB

Protecta®

Polyseam Ltd, 15 St Andrews Road, Huddersfield, West Yorkshire, HD1 6SB
Tel: +44 (0) 148 4421036
Email: post.uk@polyseam.com

For all technical details on the products specified please refer to the technical data sheets that can be found on www.protecta.eu

Signed and approved:

Sheet size: **A4**	Drawn date & no: 4/3/15
Scale: **NTS**	Drawn by: K.B

Installation Instructions

1. Before installing Protecta® FR Acrylic ensure that the surface of all service penetrations and surrounding construction is free from all loose contaminants, dust and grease.
2. Where Protecta® FR Acrylic is to be installed against surfaces that cannot tolerate direct contact; appropriate surface preparation should be made (contact Polyseam for guidance in these cases). For paints sensitive to sealing compounds, priming with a PVA primer is recommended.
3. As Protecta® FR Acrylic is water based, in cases where corrosion protection is a problem; some metals may require a barrier between the sealant and the metal surface prior to this installation.
4. When installing Protecta® FR Acrylic in hollow floor slabs or boards, fire seals specified as single sided should be installed from the soffit side of the floor assuming there is sufficient thickness of concrete below the void to follow the installation guide. Where this is not the case, tubular voids should be filled with stone wool normally the same thickness as the depth of the floor slab. Alternatively, simply fire seal on both sides.
5. When installing any backing material, cut this slightly oversize and insert into the gap ensuring a tight friction fit. Ensure correct depth is achieved.
6. Fill the gap or joint with Protecta® FR Acrylic to the required depth.
7. Apply the sealant generously to prevent air bubbles. Finish the bead with a moist spatula, pallet knife or brush.
8. Protecta® FR Acrylic can be over-painted with most emulsion or alkyd (gloss) paints.

ETA 13/0879 & 13/0880

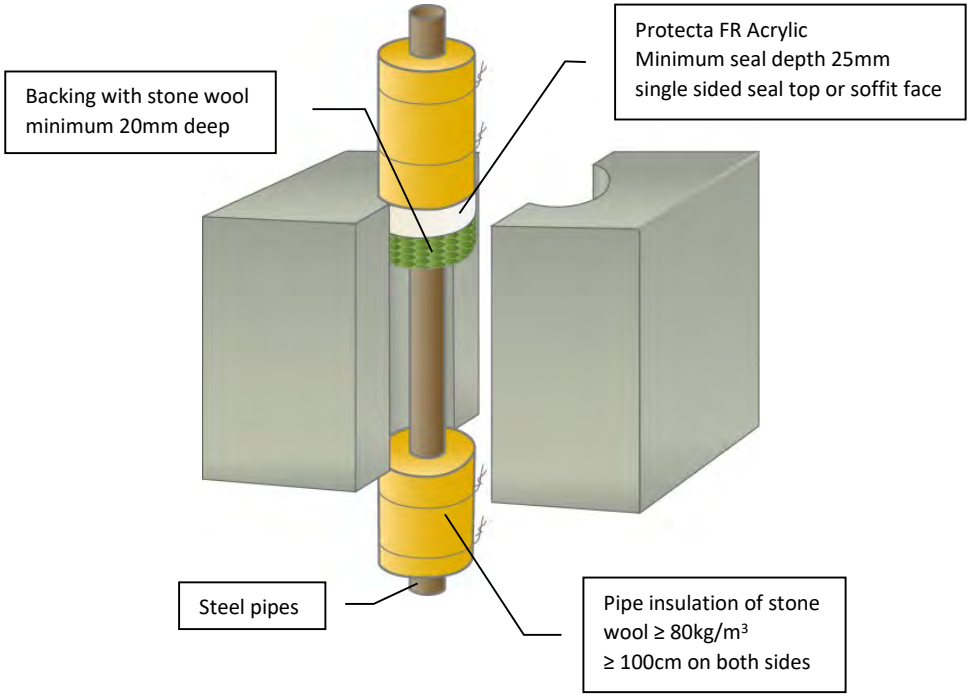

Client:

Job Title:

Products	Protecta FR Acrylic Stone wool
Application	Fire stopping of steel pipes in rigid floors
Construction	Minimum floor thickness of 150 mm and comprise aerated concrete or concrete with a minimum density of 650kg/m³.

Fire & Sound classification

Steel pipes ≤ Ø40mm with ≥ 20mm thick pipe insulation in maximum aperture 300x300mm
EI 90 C/U & E 120 C/U

Steel pipes ≤ Ø219mm with ≥ 30mm thick pipe insulation in maximum aperture 300x300mm
EI 90 C/U & E 120 C/U

Sound reduction (seal only)
62dB

Polyseam Ltd, 15 St Andrews Road, Huddersfield, West Yorkshire, HD1 6SB
Tel: +44 (0) 148 4421036
Email: post.uk@polyseam.com

For all technical details on the products specified please refer to the technical data sheets that can be found on www.protecta.eu

Signed and approved:

Sheet size: **A4**	Drawn date & no: 4/3/15
Scale: **NTS**	Drawn by: K.B

Installation Instructions

1. Before installing Protecta® FR Acrylic ensure that the surface of all service penetrations and surrounding construction is free from all loose contaminants, dust and grease.
2. Where Protecta® FR Acrylic is to be installed against surfaces that cannot tolerate direct contact; appropriate surface preparation should be made (contact Polyseam for guidance in these cases). For paints sensitive to sealing compounds, priming with a PVA primer is recommended.
3. As Protecta® FR Acrylic is water based, in cases where corrosion protection is a problem; some metals may require a barrier between the sealant and the metal surface prior to this installation.
4. When installing any backing material, cut this slightly oversize and insert into the gap ensuring a tight friction fit. Ensure correct depth is achieved.
5. Fill the gap or joint with Protecta® FR Acrylic to the required depth.
6. Apply the sealant generously to prevent air bubbles. Finish the bead with a moist spatula, pallet knife or brush.
7. Protecta® FR Acrylic can be over-painted with most emulsion or alkyd (gloss) paints.

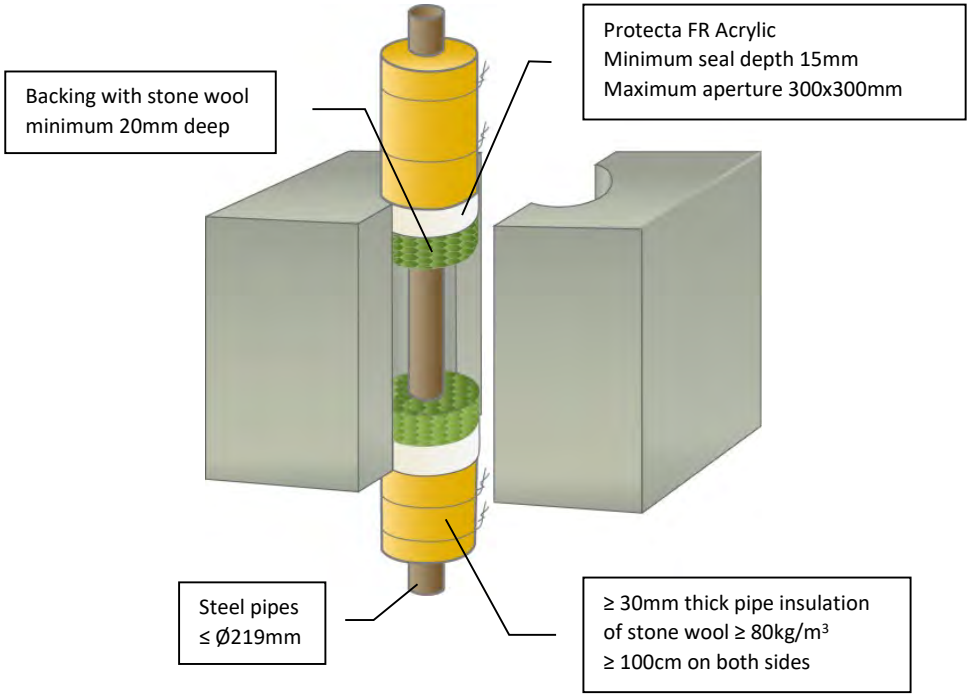

ETA 13/0879 & 13/0880

As a part of our policy of on-going product development and testing, we reserve the right to modify, alter or change product specifications without giving notice. All information contained in this document is given in good faith and is provided for guidance only. Any drawings provided are for illustrative purposes only. As Polyseam has no control over the methods or competence of installation and of prevailing site conditions, no warranties, expressed or implied, is intended to be given as to the actual performance of the product mentioned or referred to herein and no liability whatsoever will be accepted for any loss, damage or injury arising from the use of the information given.

For all technical details on the products specified please refer to the technical data sheets that can be found on www.protecta.eu

Signed and approved:

Client:

Job Title:

Products	Protecta FR Acrylic Stone wool
Application	Fire stopping of steel pipes in rigid floors
Construction	Minimum floor thickness of 150 mm and comprise aerated concrete or concrete with a minimum density of 650kg/m³.

Fire & Sound classification

Double sided seal
EI 120 C/U & E 240 C/U

Sound reduction (seal only)
62dB

Polyseam Ltd, 15 St Andrews Road,
Huddersfield, West Yorkshire, HD1 6SB
Tel: +44 (0) 148 4421036
Email: post.uk@polyseam.com

Sheet size: **A4**	Drawn date & no: 4/3/15
Scale: **NTS**	Drawn by: K.B

Installation Instructions

1. Before installing Protecta® FR Acrylic ensure that the surface of all service penetrations and surrounding construction is free from all loose contaminants, dust and grease.
2. Where Protecta® FR Acrylic is to be installed against surfaces that cannot tolerate direct contact; appropriate surface preparation should be made (contact Polyseam for guidance in these cases). For paints sensitive to sealing compounds, priming with a PVA primer is recommended.
3. When installing any backing material, cut this slightly oversize and insert into the gap ensuring a tight friction fit. Ensure correct depth is achieved.
4. Fill the gap or joint with Protecta® FR Acrylic to the required depth.
5. Apply the sealant generously to prevent air bubbles. Finish the bead with a moist spatula, pallet knife or brush.
6. Protecta® FR Acrylic can be over-painted with most emulsion or alkyd (gloss) paints.

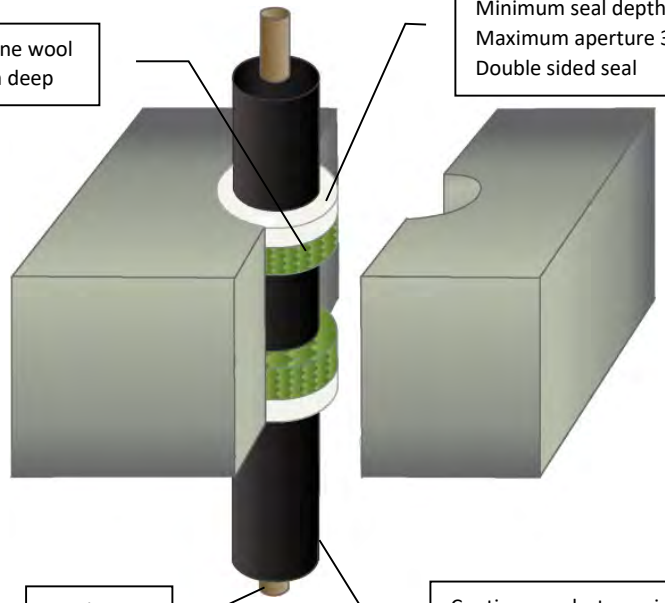

ETA 13/0879 & 13/0880

As a part of our policy of on-going product development and testing, we reserve the right to modify, alter or change product specifications without giving notice. All information contained in this document is given in good faith and is provided for guidance only. Any drawings provided are for illustrative purposes only. As Polyseam has no control over the methods or competence of installation and of prevailing site conditions, no warranties, expressed or implied, is intended to be given as to the actual performance of the product mentioned or referred to herein and no liability whatsoever will be accepted for any loss, damage or injury arising from the use of the information given.

For all technical details on the products specified please refer to the technical data sheets that can be found on www.protecta.eu

Signed and approved:

Client:

Job Title:

Products	Protecta FR Acrylic Stone wool
Application	Fire stopping of steel pipes in rigid floors
Construction	Minimum floor thickness of 150 mm and comprise aerated concrete or concrete with a minimum density of 650kg/m³.

Fire & Sound classification

Steel pipes ≤ Ø40mm with 13 – 19mm thick pipe insulation

EI 180 C/U & E 180 C/U

Sound reduction (seal only)

62dB

Polyseam Ltd, 15 St Andrews Road, Huddersfield, West Yorkshire, HD1 6SB
Tel: +44 (0) 148 4421036
Email: post.uk@polyseam.com

Sheet size: **A4**	Drawn date & no: 4/3/15
Scale: **NTS**	Drawn by: K.B

Installation Instructions

1. Before installing Protecta® FR Acrylic ensure that the surface of all service penetrations and surrounding construction is free from all loose contaminants, dust and grease.
2. Where Protecta® FR Acrylic is to be installed against surfaces that cannot tolerate direct contact; appropriate surface preparation should be made (contact Polyseam for guidance in these cases). For paints sensitive to sealing compounds, priming with a PVA primer is recommended.
3. When installing any backing material, cut this slightly oversize and insert into the gap ensuring a tight friction fit. Ensure correct depth is achieved.
4. Fill the gap or joint with Protecta® FR Acrylic to the required depth.
5. Apply the sealant generously to prevent air bubbles. Finish the bead with a moist spatula, pallet knife or brush.
6. Protecta® FR Acrylic can be over-painted with most emulsion or alkyd (gloss) paints.

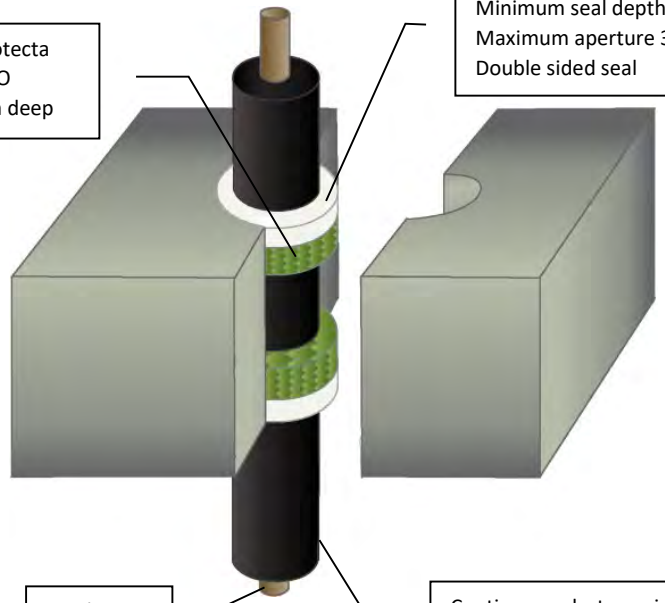

ETA 13/0879 & 13/0880

As a part of our policy of on-going product development and testing, we reserve the right to modify, alter or change product specifications without giving notice. All information contained in this document is given in good faith and is provided for guidance only. Any drawings provided are for illustrative purposes only. As Polyseam has no control over the methods or competence of installation and of prevailing site conditions, no warranties, expressed or implied, is intended to be given as to the actual performance of the product mentioned or referred to herein and no liability whatsoever will be accepted for any loss, damage or injury arising from the use of the information given.

For all technical details on the products specified please refer to the technical data sheets that can be found on www.protecta.eu

Signed and approved:

Client:

Job Title:

Products	Protecta FR Acrylic Protecta Mineral Fibre BIO
Application	Fire stopping of steel pipes in rigid floors
Construction	Minimum floor thickness of 150 mm and comprise aerated concrete or concrete with a minimum density of 650kg/m³.

Fire & Sound classification

Steel pipes ≤ Ø165mm with 13 – 19mm thick pipe insulation

EI 60 C/U & E 60 C/U

Sound reduction (seal only)

62dB

Protecta®

Polyseam Ltd, 15 St Andrews Road, Huddersfield, West Yorkshire, HD1 6SB
Tel: +44 (0) 148 4421036
Email: post.uk@polyseam.com

Sheet size: **A4**	Drawn date & no: 4/3/15
Scale: **NTS**	Drawn by: K.B

Installation Instructions

1. Before installing Protecta® FR Graphite ensure that the surface of all service penetrations and surrounding construction is free from all loose contaminants, dust and grease.
2. When installing any backing material, cut this slightly oversize and insert into the gap ensuring a tight friction fit. Ensure correct depth is achieved.
3. Fill the gap or joint with Protecta® FR Graphite to the required depth.
4. Apply the sealant generously avoiding air bubbles. Finish the bead with a moist spatula or pallet knife. Avoid excessive tooling/smoothing as this may make the seal surface wet and soft.
5. Protecta® FR Graphite can be over-painted with most emulsion or alkyd (gloss) paints.

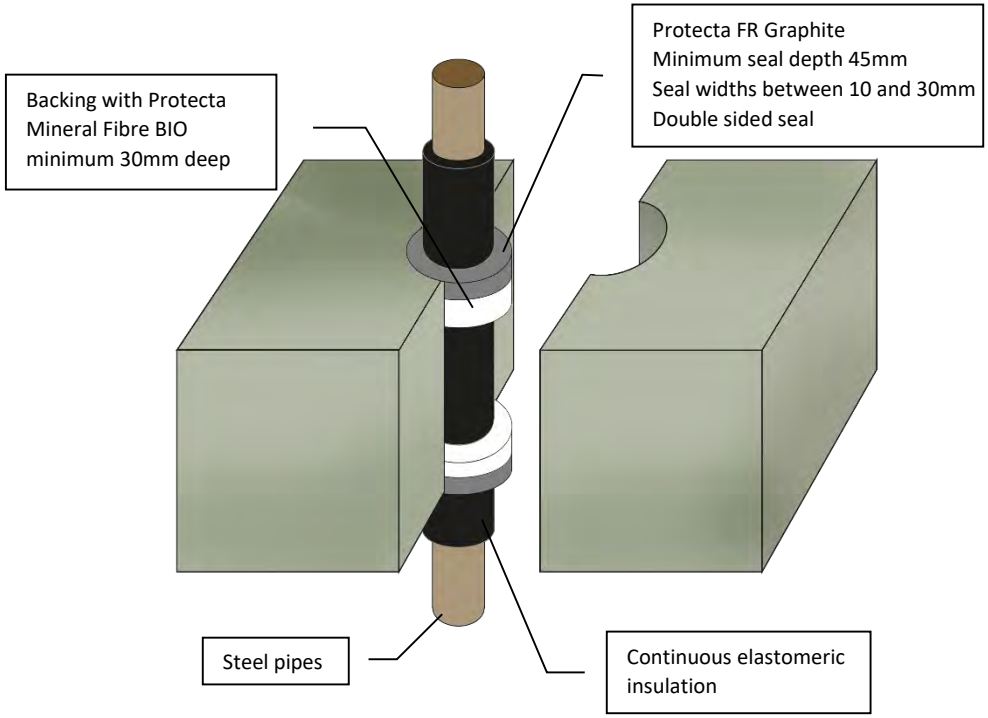

ETA 18/0626

As a part of our policy of on-going product development and testing, we reserve the right to modify, alter or change product specifications without giving notice. All information contained in this document is given in good faith and is provided for guidance only. Any drawings provided are for illustrative purposes only. As Polyseam has no control over the methods or competence of installation and of prevailing site conditions, no warranties, expressed or implied, is intended to be given as to the actual performance of the product mentioned or referred to herein and no liability whatsoever will be accepted for any loss, damage or injury arising from the use of the information given.

For all technical details on the products specified please refer to the technical data sheets that can be found on www.protecta.eu

Signed and approved:

Client:

Job Title:

Products	Protecta FR Graphite Protecta Mineral Fibre BIO
Application	Fire stopping of steel pipes in rigid floors
Construction	Minimum floor thickness of 150 mm and comprise aerated concrete or concrete with a minimum density of 650kg/m³.

Fire & Sound classification

Steel pipes ≤ Ø324mm with 25 – 49mm thick pipe insulation
EI 60 C/U

Steel pipes ≤ Ø324mm with 50mm thick pipe insulation
EI 120 C/U

Sound reduction (seal only)
Rw 53dB

Polyseam Ltd, 15 St Andrews Road, Huddersfield, West Yorkshire, HD1 6SB
Tel: +44 (0) 148 4421036
Email: post.uk@polyseam.com

Sheet size: **A4**	Drawn date & no: 11/11/18
Scale: **NTS**	Drawn by: K.B

Installation Instructions

1. Before installing Protecta® FR Acrylic ensure that the surface of all service penetrations and surrounding construction is free from all loose contaminants, dust and grease.
2. Where Protecta® FR Acrylic is to be installed against surfaces that cannot tolerate direct contact; appropriate surface preparation should be made (contact Polyseam for guidance in these cases). For paints sensitive to sealing compounds, priming with a PVA primer is recommended.
3. As Protecta® FR Acrylic is water based, in cases where corrosion protection is a problem; some metals may require a barrier between the sealant and the metal surface prior to this installation.
4. When installing any backing material, cut this slightly oversize and insert into the gap ensuring a tight friction fit. Ensure correct depth is achieved.
5. Fill the gap or joint with Protecta® FR Acrylic to the required depth.
6. Apply the sealant generously to prevent air bubbles. Finish the bead with a moist spatula, pallet knife or brush.
7. Protecta® FR Acrylic can be over-painted with most emulsion or alkyd (gloss) paints.

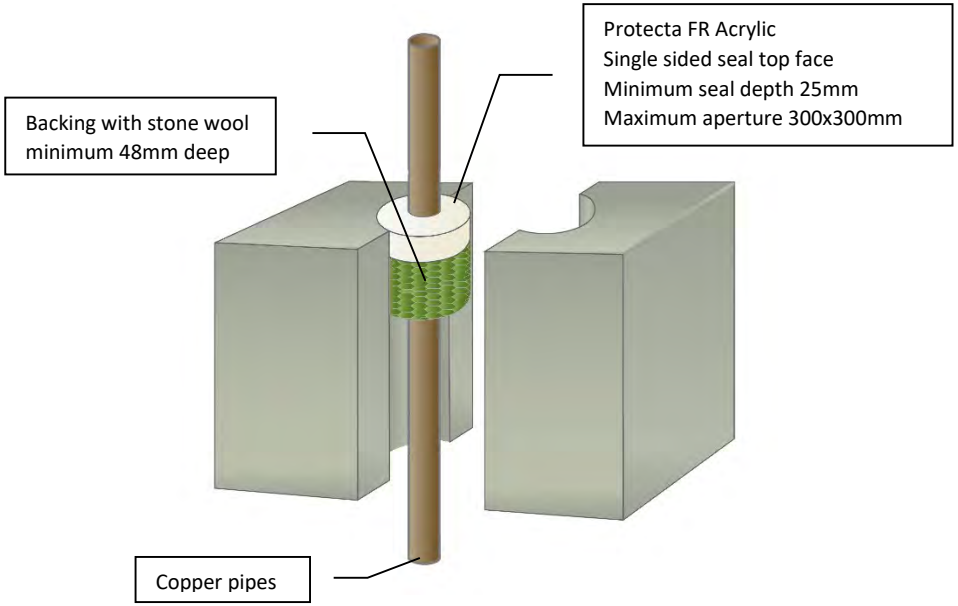

ETA 13/0879 & 13/0880

As a part of our policy of on-going product development and testing, we reserve the right to modify, alter or change product specifications without giving notice. All information contained in this document is given in good faith and is provided for guidance only. Any drawings provided are for illustrative purposes only. As Polyseam has no control over the methods or competence of installation and of prevailing site conditions, no warranties, expressed or implied, is intended to be given as to the actual performance of the product mentioned or referred to herein and no liability whatsoever will be accepted for any loss, damage or injury arising from the use of the information given.

For all technical details on the products specified please refer to the technical data sheets that can be found on www.protecta.eu

Signed and approved:

Client:

Job Title:

Products	Protecta FR Acrylic Stone wool
Application	Fire stopping of copper pipes in rigid floors
Construction	Minimum floor thickness of 150 mm and comprise aerated concrete or concrete with a minimum density of 650kg/m³.

Fire & Sound classification

Copper pipes ≤ Ø6mm
EI 120 C/C & E 120 C/C

Copper pipes ≤ Ø15mm
EI 60 C/C & E 120 C/C

Sound reduction (seal only)
62 dB

Protecta®

Polyseam Ltd, 15 St Andrews Road,
Huddersfield, West Yorkshire, HD1 6SB
Tel: +44 (0) 148 4421036
Email: post.uk@polyseam.com

Sheet size: **A4**	Drawn date & no: 9/4/18
Scale: **NTS**	Drawn by: K.B

Installation Instructions

1. Before installing Protecta® FR Acrylic ensure that the surface of all service penetrations and surrounding construction is free from all loose contaminants, dust and grease.
2. Where Protecta® FR Acrylic is to be installed against surfaces that cannot tolerate direct contact; appropriate surface preparation should be made (contact Polyseam for guidance in these cases). For paints sensitive to sealing compounds, priming with a PVA primer is recommended.
3. As Protecta® FR Acrylic is water based, in cases where corrosion protection is a problem; some metals may require a barrier between the sealant and the metal surface prior to this installation.
4. When installing any backing material, cut this slightly oversize and insert into the gap ensuring a tight friction fit. Ensure correct depth is achieved.
5. Fill the gap or joint with Protecta® FR Acrylic to the required depth.
6. Apply the sealant generously to prevent air bubbles. Finish the bead with a moist spatula, pallet knife or brush.
7. Protecta® FR Acrylic can be over-painted with most emulsion or alkyd (gloss) paints.

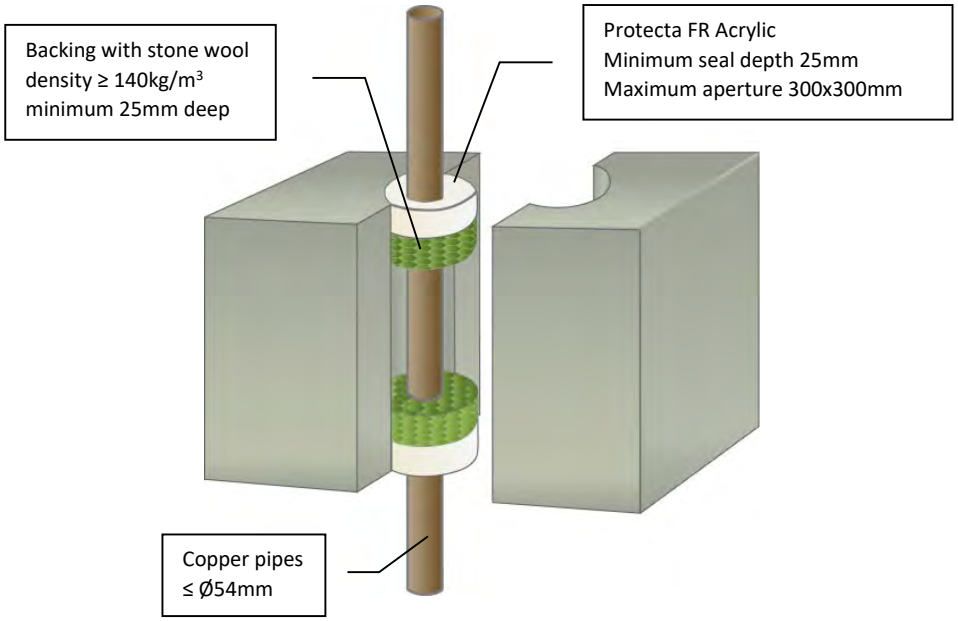

ETA 13/0879 & 13/0880

As a part of our policy of on-going product development and testing, we reserve the right to modify, alter or change product specifications without giving notice. All information contained in this document is given in good faith and is provided for guidance only. Any drawings provided are for illustrative purposes only. As Polyseam has no control over the methods or competence of installation and of prevailing site conditions, no warranties, expressed or implied, is intended to be given as to the actual performance of the product mentioned or referred to herein and no liability whatsoever will be accepted for any loss, damage or injury arising from the use of the information given.

For all technical details on the products specified please refer to the technical data sheets that can be found on www.protecta.eu

Signed and approved:

Client:

Job Title:

Products	Protecta FR Acrylic Stone wool
Application	Fire stopping of copper pipes in rigid floors
Construction	Minimum floor thickness of 150 mm and comprise aerated concrete or concrete with a minimum density of 650kg/m³.

Fire & Sound classification

Double sided seal
EI 20 C/U & E 120 C/U

Sound reduction (seal only)
62 dB

Polyseam Ltd, 15 St Andrews Road,
Huddersfield, West Yorkshire, HD1 6SB
Tel: +44 (0) 148 4421036
Email: post.uk@polyseam.com

Sheet size: **A4**	Drawn date & no: 4/3/15
Scale: **NTS**	Drawn by: K.B

Installation Instructions

1. Before installing Protecta® FR Acrylic ensure that the surface of all service penetrations and surrounding construction is free from all loose contaminants, dust and grease.
2. Where Protecta® FR Acrylic is to be installed against surfaces that cannot tolerate direct contact; appropriate surface preparation should be made (contact Polyseam for guidance in these cases). For paints sensitive to sealing compounds, priming with a PVA primer is recommended.
3. When installing any backing material, cut this slightly oversize and insert into the gap ensuring a tight friction fit. Ensure correct depth is achieved.
4. Fill the gap or joint with Protecta® FR Acrylic to the required depth.
5. Apply the sealant generously to prevent air bubbles. Finish the bead with a moist spatula, pallet knife or brush.
6. Protecta® FR Acrylic can be over-painted with most emulsion or alkyd (gloss) paints.

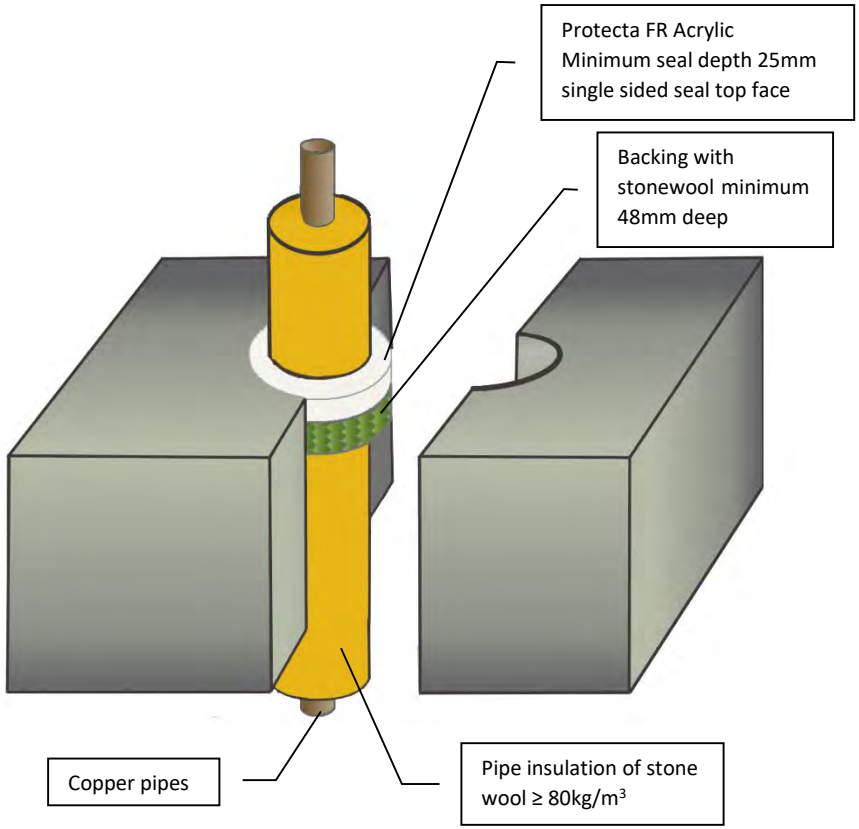

ETA 13/0879 & 13/0880

Client:

Job Title:

Products	Protecta FR Acrylic Stonewool
Application	Fire stopping of copper pipes in rigid floors
Construction	Minimum floor thickness of 150 mm and comprise aerated concrete or concrete with a minimum density of 650kg/m³.

Fire & Sound classification

Copper pipes ≤ Ø54mm with 20-80mm thick continuous pipe insulation in maximum aperture 300x300mm

EI 180 C/C & E 240 C/C

Sound reduction (seal only)

62dB

Protecta®

Polyseam Ltd, 15 St Andrews Road, Huddersfield, West Yorkshire, HD1 6SB
Tel: +44 (0) 148 4421036
Email: post.uk@polyseam.com

For all technical details on the products specified please refer to the technical data sheets that can be found on www.protecta.eu

Signed and approved:

Sheet size: **A4**	Drawn date & no: 9/4/18
Scale: **NTS**	Drawn by: K.B

Installation Instructions

1. Before installing Protecta® FR Acrylic ensure that the surface of all service penetrations and surrounding construction is free from all loose contaminants, dust and grease.
2. Where Protecta® FR Acrylic is to be installed against surfaces that cannot tolerate direct contact; appropriate surface preparation should be made (contact Polyseam for guidance in these cases). For paints sensitive to sealing compounds, priming with a PVA primer is recommended.
3. As Protecta® FR Acrylic is water based, in cases where corrosion protection is a problem; some metals may require a barrier between the sealant and the metal surface prior to this installation.
4. When installing Protecta® FR Acrylic in hollow floor slabs or boards, fire seals specified as single sided should be installed from the soffit side of the floor assuming there is sufficient thickness of concrete below the void to follow the installation guide. Where this is not the case, tubular voids should be filled with stone wool normally the same thickness as the depth of the floor slab. Alternatively, simply fire seal on both sides.
5. When installing any backing material, cut this slightly oversize and insert into the gap ensuring a tight friction fit. Ensure correct depth is achieved.
6. Fill the gap or joint with Protecta® FR Acrylic to the required depth.
7. Apply the sealant generously to prevent air bubbles. Finish the bead with a moist spatula, pallet knife or brush.
8. Protecta® FR Acrylic can be over-painted with most emulsion or alkyd (gloss) paints.

ETA 13/0879 & 13/0880

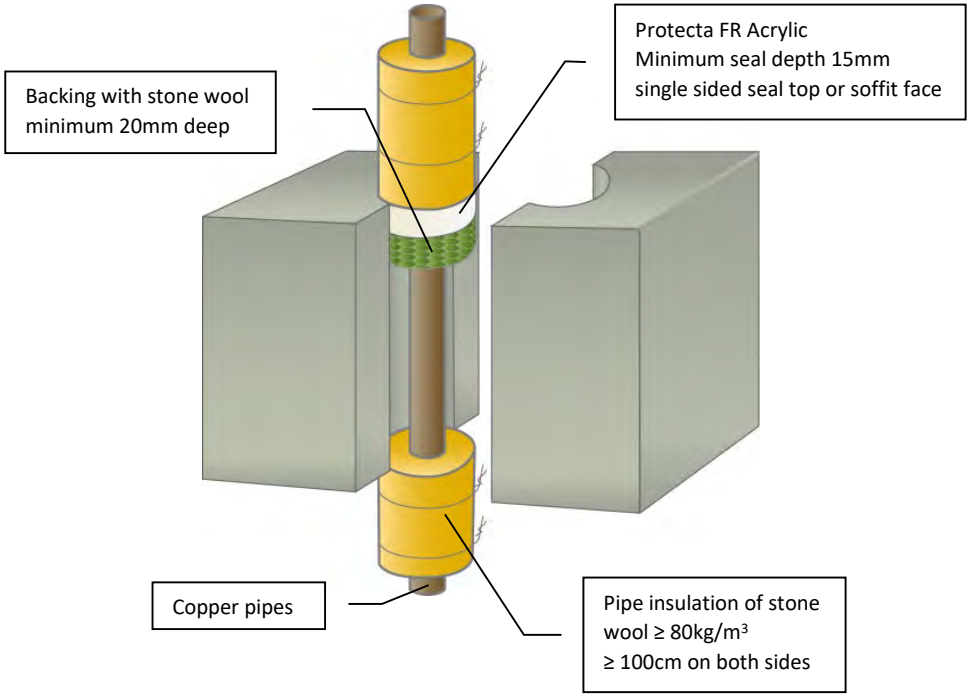

Client:

Job Title:

Products	Protecta FR Acrylic Stone wool
Application	Fire stopping of copper pipes in rigid floors
Construction	Minimum floor thickness of 150 mm and comprise aerated concrete or concrete with a minimum density of 650kg/m³.

Fire & Sound classification

Copper pipes ≤ Ø12mm with ≥ 20mm thick pipe insulation in maximum aperture pipe Ø + 20mm
EI 240 C/U & E 240 C/U

Copper pipes ≤ Ø54mm with ≥ 20mm thick pipe insulation in maximum aperture 300x300mm
EI 60 C/U & E 90 C/U

Copper pipes ≤ Ø54mm with ≥ 20mm thick pipe insulation in maximum aperture pipe + Ø 20mm
EI 180 C/U & E 240 C/U

Sound reduction (seal only) 62dB

Polyseam Ltd, 15 St Andrews Road, Huddersfield, West Yorkshire, HD1 6SB
Tel: +44 (0) 148 4421036
Email: post.uk@polyseam.com

For all technical details on the products specified please refer to the technical data sheets that can be found on www.protecta.eu

Signed and approved:

Sheet size: **A4**	Drawn date & no: 4/3/15
Scale: **NTS**	Drawn by: K.B

Installation Instructions

1. Before installing Protecta® FR Acrylic ensure that the surface of all service penetrations and surrounding construction is free from all loose contaminants, dust and grease.
2. Where Protecta® FR Acrylic is to be installed against surfaces that cannot tolerate direct contact; appropriate surface preparation should be made (contact Polyseam for guidance in these cases). For paints sensitive to sealing compounds, priming with a PVA primer is recommended.
3. As Protecta® FR Acrylic is water based, in cases where corrosion protection is a problem; some metals may require a barrier between the sealant and the metal surface prior to this installation.
4. When installing Protecta® FR Acrylic in hollow floor slabs or boards, fire seals specified as single sided should be installed from the soffit side of the floor assuming there is sufficient thickness of concrete below the void to follow the installation guide. Where this is not the case, tubular voids should be filled with stone wool normally the same thickness as the depth of the floor slab. Alternatively, simply fire seal on both sides.
5. When installing any backing material, cut this slightly oversize and insert into the gap ensuring a tight friction fit. Ensure correct depth is achieved.
6. Fill the gap or joint with Protecta® FR Acrylic to the required depth.
7. Apply the sealant generously to prevent air bubbles. Finish the bead with a moist spatula, pallet knife or brush.
8. Protecta® FR Acrylic can be over-painted with most emulsion or alkyd (gloss) paints.

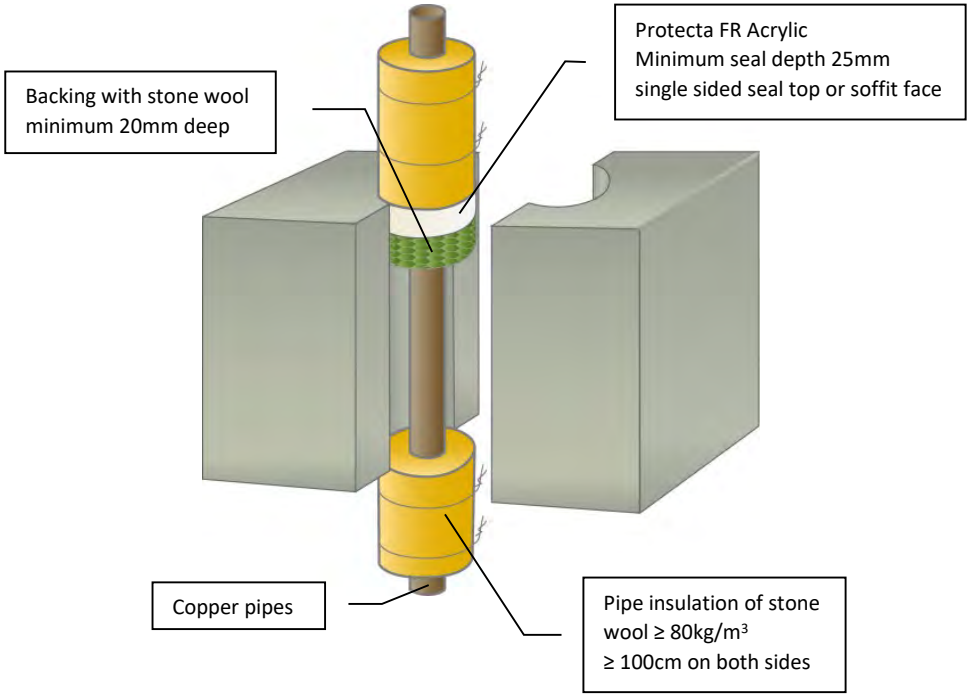

ETA 13/0879 & 13/0880

Client:

Job Title:

Products	Protecta FR Acrylic Stone wool
Application	Fire stopping of copper pipes in rigid floors
Construction	Minimum floor thickness of 150 mm and comprise aerated concrete or concrete with a minimum density of 650kg/m³.

Fire & Sound classification

Copper pipes ≤ Ø54mm with ≥ 20mm thick pipe insulation in maximum aperture 300x300mm
EI 120 C/U & E 120 C/U

Sound reduction (seal only) 62dB

Polyseam Ltd, 15 St Andrews Road, Huddersfield, West Yorkshire, HD1 6SB
Tel: +44 (0) 148 4421036
Email: post.uk@polyseam.com

For all technical details on the products specified please refer to the technical data sheets that can be found on www.protecta.eu

Signed and approved:

Sheet size: **A4**	Drawn date & no: 4/3/15
Scale: **NTS**	Drawn by: K.B

Installation Instructions

1. Before installing Protecta® FR Acrylic ensure that the surface of all service penetrations and surrounding construction is free from all loose contaminants, dust and grease.
2. Where Protecta® FR Acrylic is to be installed against surfaces that cannot tolerate direct contact; appropriate surface preparation should be made (contact Polyseam for guidance in these cases). For paints sensitive to sealing compounds, priming with a PVA primer is recommended.
3. When installing any backing material, cut this slightly oversize and insert into the gap ensuring a tight friction fit. Ensure correct depth is achieved.
4. Fill the gap or joint with Protecta® FR Acrylic to the required depth.
5. Apply the sealant generously to prevent air bubbles. Finish the bead with a moist spatula, pallet knife or brush.
6. Protecta® FR Acrylic can be over-painted with most emulsion or alkyd (gloss) paints.

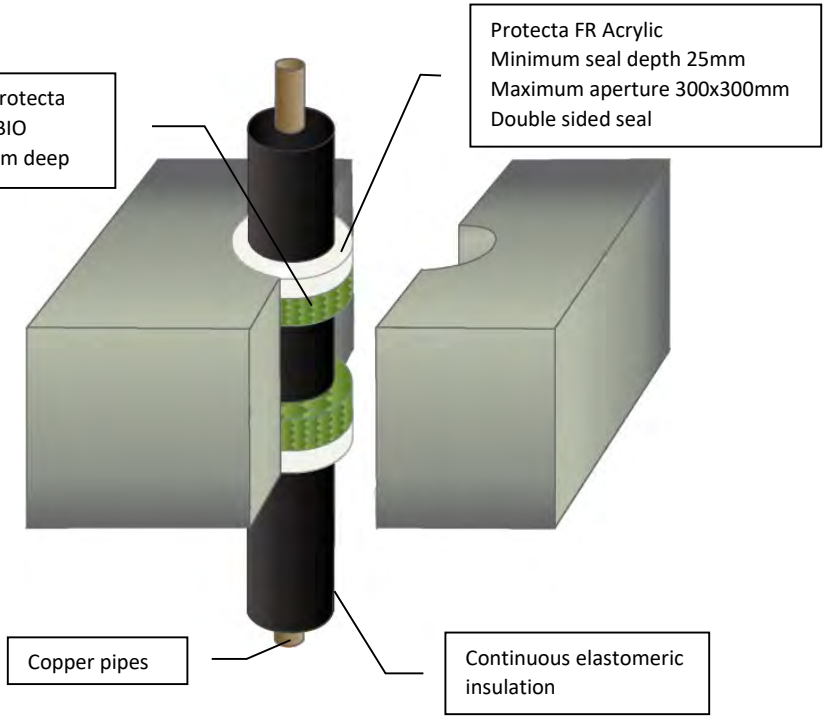

ETA 13/0879 & 13/0880

Client:

Job Title:

Products	Protecta FR Acrylic Protecta Mineral Fibre BIO
Application	Fire stopping of copper pipes in rigid floors
Construction	Minimum floor thickness of 150 mm and comprise aerated concrete or concrete with a minimum density of 650kg/m³.

Fire & Sound classification

Copper pipes ≤ Ø12mm with 9mm thick pipe insulation	EI 180 C/C & E 240 C/C
Copper pipes ≤ Ø54mm with 9-13mm thick pipe insulation	EI 120 C/C & E 180 C/C
Copper pipes ≤ Ø54mm with 14-25mm thick pipe insulation	EI 60 C/C & E 90 C/C
Sound reduction (seal only)	62dB

Polyseam Ltd, 15 St Andrews Road, Huddersfield, West Yorkshire, HD1 6SB
Tel: +44 (0) 148 4421036
Email: post.uk@polyseam.com

For all technical details on the products specified please refer to the technical data sheets that can be found on www.protecta.eu

Signed and approved:

Sheet size: **A4**	Drawn date & no: 4/3/15
Scale: **NTS**	Drawn by: K.B

Installation Instructions

1. Before installing Protecta® FR Acrylic ensure that the surface of all service penetrations and surrounding construction is free from all loose contaminants, dust and grease.
2. Where Protecta® FR Acrylic is to be installed against surfaces that cannot tolerate direct contact; appropriate surface preparation should be made (contact Polyseam for guidance in these cases). For paints sensitive to sealing compounds, priming with a PVA primer is recommended.
3. As Protecta® FR Acrylic is water based, in cases where corrosion protection is a problem; some metals may require a barrier between the sealant and the metal surface prior to this installation.
4. When installing any backing material, cut this slightly oversize and insert into the gap ensuring a tight friction fit. Ensure correct depth is achieved.
5. Fill the gap or joint with Protecta® FR Acrylic to the required depth.
6. Apply the sealant generously to prevent air bubbles. Finish the bead with a moist spatula, pallet knife or brush.
7. Protecta® FR Acrylic can be over-painted with most emulsion or alkyd (gloss) paints.

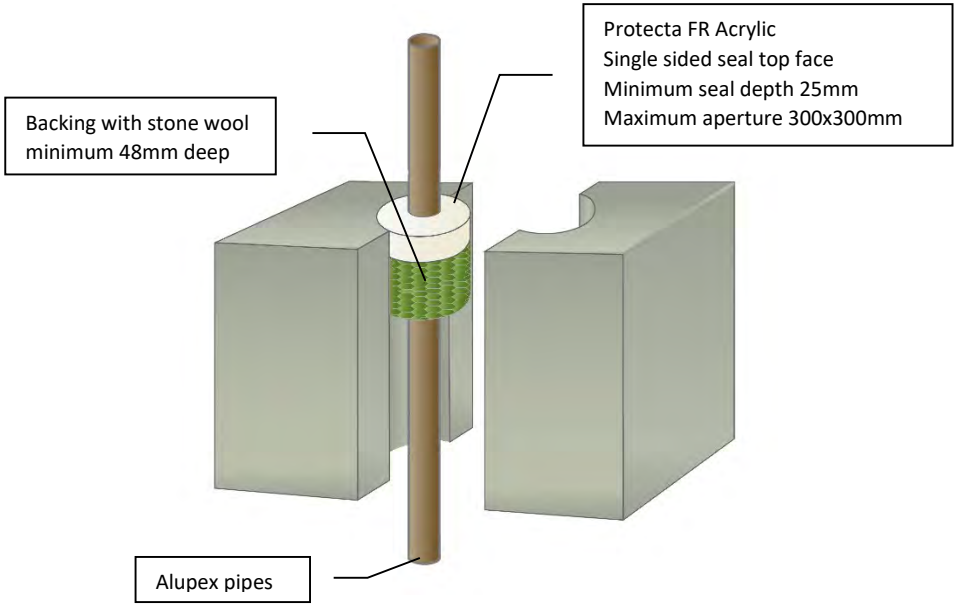

ETA 13/0879 & 13/0880

For all technical details on the products specified please refer to the technical data sheets that can be found on www.protecta.eu

Signed and approved:

Client:

Job Title:

Products	Protecta FR Acrylic Stone wool
Application	Fire stopping of alupex pipes in rigid floors
Construction	Minimum floor thickness of 150 mm and comprise aerated concrete or concrete with a minimum density of 650kg/m³.

Fire & Sound classification

Alupex pipes ≤ Ø20mm
EI 120 C/C & E 120 C/C

Sound reduction (seal only)
62 dB

Polyseam Ltd, 15 St Andrews Road,
Huddersfield, West Yorkshire, HD1 6SB
Tel: +44 (0) 148 4421036
Email: post.uk@polyseam.com

Sheet size: **A4**	Drawn date & no: 9/4/18
Scale: **NTS**	Drawn by: K.B

Installation Instructions

1. Before installing Protecta® FR Acrylic ensure that the surface of all service penetrations and surrounding construction is free from all loose contaminants, dust and grease.
2. Where Protecta® FR Acrylic is to be installed against surfaces that cannot tolerate direct contact; appropriate surface preparation should be made (contact Polyseam for guidance in these cases). For paints sensitive to sealing compounds, priming with a PVA primer is recommended.
3. As Protecta® FR Acrylic is water based, in cases where corrosion protection is a problem; some metals may require a barrier between the sealant and the metal surface prior to this installation.
4. When installing Protecta® FR Acrylic in hollow floor slabs or boards, fire seals specified as single sided should be installed from the soffit side of the floor assuming there is sufficient thickness of concrete below the void to follow the installation guide. Where this is not the case, tubular voids should be filled with stone wool normally the same thickness as the depth of the floor slab. Alternatively, simply fire seal on both sides.
5. When installing any backing material, cut this slightly oversize and insert into the gap ensuring a tight friction fit. Ensure correct depth is achieved.
6. Fill the gap or joint with Protecta® FR Acrylic to the required depth.
7. Apply the sealant generously to prevent air bubbles. Finish the bead with a moist spatula, pallet knife or brush.
8. Protecta® FR Acrylic can be over-painted with most emulsion or alkyd (gloss) paints.

ETA 13/0879 & 13/0880

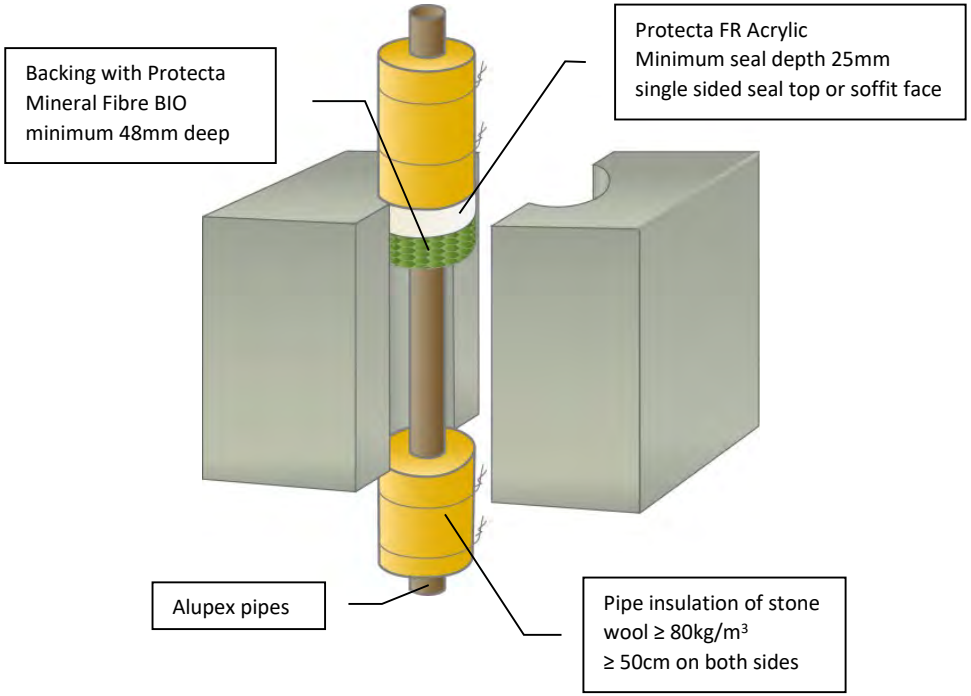

Client:

Job Title:

Products	Protecta FR Acrylic Protecta Mineral Fibre BIO
Application	Fire stopping of alupex pipes in rigid floors
Construction	Minimum floor thickness of 150 mm and comprise aerated concrete or concrete with a minimum density of 650kg/m³.

Fire & Sound classification

Alupex pipes ≤ Ø75mm with ≥ 20mm thick pipe insulation in maximum aperture 300x300mm
EI 240 C/C & E 240 C/C

Sound reduction (seal only)
62dB

Polyseam Ltd, 15 St Andrews Road, Huddersfield, West Yorkshire, HD1 6SB
Tel: +44 (0) 148 4421036
Email: post.uk@polyseam.com

For all technical details on the products specified please refer to the technical data sheets that can be found on www.protecta.eu

Signed and approved:

Sheet size: **A4**	Drawn date & no: 4/3/15
Scale: **NTS**	Drawn by: K.B

Installation Instructions

1. Before installing Protecta® FR Acrylic ensure that the surface of all service penetrations and surrounding construction is free from all loose contaminants, dust and grease.
2. Where Protecta® FR Acrylic is to be installed against surfaces that cannot tolerate direct contact; appropriate surface preparation should be made (contact Polyseam for guidance in these cases). For paints sensitive to sealing compounds, priming with a PVA primer is recommended.
3. When installing any backing material, cut this slightly oversize and insert into the gap ensuring a tight friction fit. Ensure correct depth is achieved.
4. Fill the gap or joint with Protecta® FR Acrylic to the required depth.
5. Apply the sealant generously to prevent air bubbles. Finish the bead with a moist spatula, pallet knife or brush.
6. Protecta® FR Acrylic can be over-painted with most emulsion or alkyd (gloss) paints.

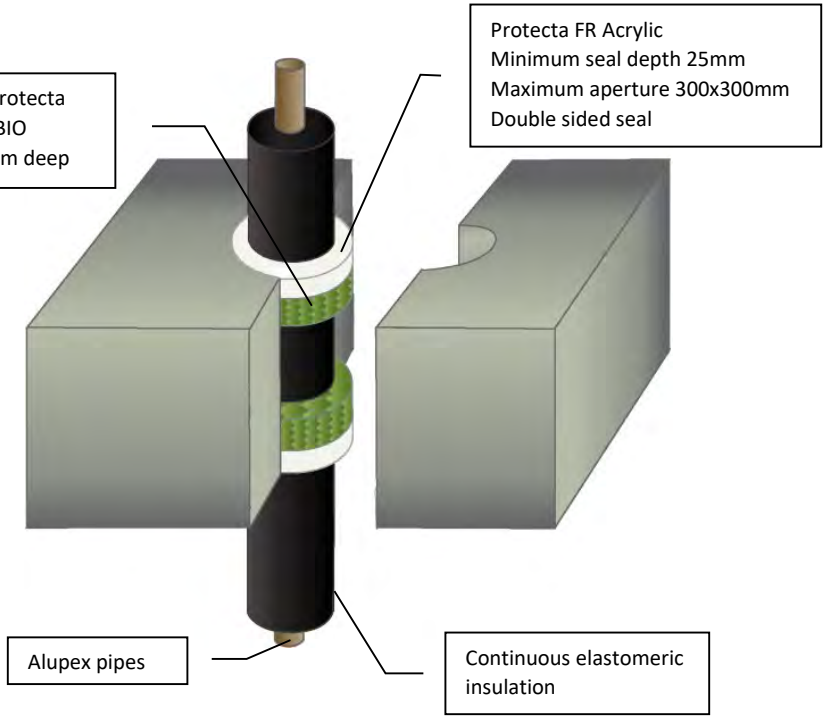

ETA 13/0879 & 13/0880

Client:

Job Title:

Products	Protecta FR Acrylic Protecta Mineral Fibre BIO
Application	Fire stopping of alupex pipes in rigid floors
Construction	Minimum floor thickness of 150 mm and comprise aerated concrete or concrete with a minimum density of 650kg/m³.

Fire & Sound classification

Alupex pipes ≤ Ø16mm with 9mm thick pipe insulation	EI 180 C/C & E 180 C/C
Alupex pipes ≤ Ø75mm with 9-13mm thick pipe insulation	EI 60 C/C & E 120 C/C
Alupex pipes ≤ Ø75mm with 14-25mm thick pipe insulation	EI 60 C/C & E 60 C/C
Sound reduction (seal only)	62dB

Polyseam Ltd, 15 St Andrews Road, Huddersfield, West Yorkshire, HD1 6SB
Tel: +44 (0) 148 4421036
Email: post.uk@polyseam.com

For all technical details on the products specified please refer to the technical data sheets that can be found on www.protecta.eu

Signed and approved:

Sheet size: **A4**	Drawn date & no: 4/3/15
Scale: **NTS**	Drawn by: K.B

Installation Instructions

1. Before installing Protecta® FR Acrylic ensure that the surface of all service penetrations and surrounding construction is free from all loose contaminants, dust and grease.
2. Where Protecta® FR Acrylic is to be installed against surfaces that cannot tolerate direct contact; appropriate surface preparation should be made (contact Polyseam for guidance in these cases). For paints sensitive to sealing compounds, priming with a PVA primer is recommended.
3. When installing any backing material, cut this slightly oversize and insert into the gap ensuring a tight friction fit. Ensure correct depth is achieved.
4. Fill the gap or joint with Protecta® FR Acrylic to the required depth.
5. Apply the sealant generously to prevent air bubbles. Finish the bead with a moist spatula, pallet knife or brush.
6. Protecta® FR Acrylic can be over-painted with most emulsion or alkyd (gloss) paints.

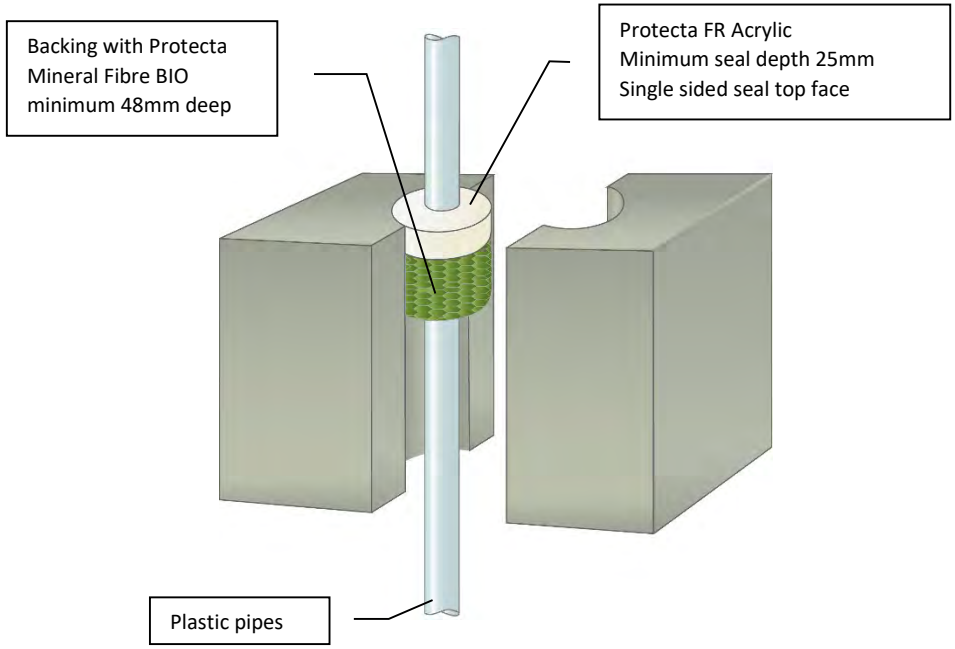

ETA 13/0879 & 13/0880

As a part of our policy of on-going product development and testing, we reserve the right to modify, alter or change product specifications without giving notice. All information contained in this document is given in good faith and is provided for guidance only. Any drawings provided are for illustrative purposes only. As Polyseam has no control over the methods or competence of installation and of prevailing site conditions, no warranties, expressed or implied, is intended to be given as to the actual performance of the product mentioned or referred to herein and no liability whatsoever will be accepted for any loss, damage or injury arising from the use of the information given.

For all technical details on the products specified please refer to the technical data sheets that can be found on www.protecta.eu

Signed and approved:

Client:

Job Title:

Products	Protecta FR Acrylic Stone wool
Application	Fire stopping of PEX plastic pipes in rigid floors
Construction	Minimum floor thickness of 150 mm and comprise aerated concrete or concrete with a minimum density of 650kg/m³.

Fire & Sound classification

PEX pipe-in-pipe ≤ Ø25mm in maximum aperture Ø85mm

EI 90 C/C & E 90 C/C

Sound reduction (seal only)

62dB

Protecta®

Polyseam Ltd, 15 St Andrews Road, Huddersfield, West Yorkshire, HD1 6SB
Tel: +44 (0) 148 4421036
Email: post.uk@polyseam.com

Sheet size: **A4**	Drawn date & no: 4/3/15
Scale: **NTS**	Drawn by: K.B

Installation Instructions

1. Before installing Protecta® FR Acrylic ensure that the surface of all service penetrations and surrounding construction is free from all loose contaminants, dust and grease.
2. Where Protecta® FR Acrylic is to be installed against surfaces that cannot tolerate direct contact; appropriate surface preparation should be made (contact Polyseam for guidance in these cases). For paints sensitive to sealing compounds, priming with a PVA primer is recommended.
3. When installing any backing material, cut this slightly oversize and insert into the gap ensuring a tight friction fit. Ensure correct depth is achieved.
4. Fill the gap or joint with Protecta® FR Acrylic to the required depth.
5. Apply the sealant generously to prevent air bubbles. Finish the bead with a moist spatula, pallet knife or brush.
6. Protecta® FR Acrylic can be over-painted with most emulsion or alkyd (gloss) paints.

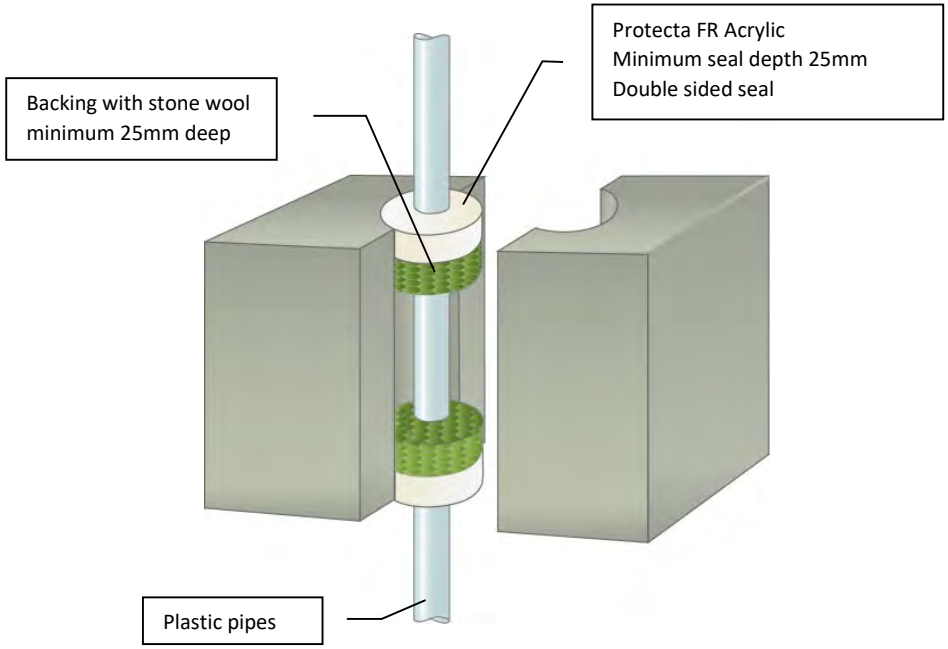

ETA 13/0879 & 13/0880

As a part of our policy of on-going product development and testing, we reserve the right to modify, alter or change product specifications without giving notice. All information contained in this document is given in good faith and is provided for guidance only. Any drawings provided are for illustrative purposes only. As Polyseam has no control over the methods or competence of installation and of prevailing site conditions, no warranties, expressed or implied, is intended to be given as to the actual performance of the product mentioned or referred to herein and no liability whatsoever will be accepted for any loss, damage or injury arising from the use of the information given.

For all technical details on the products specified please refer to the technical data sheets that can be found on www.protecta.eu

Signed and approved:

Client:

Job Title:

Products	Protecta FR Acrylic Stone wool
Application	Fire stopping of plastic pipes in rigid floors
Construction	Minimum floor thickness of 150 mm and comprise aerated concrete or concrete with a minimum density of 650kg/m³.

Fire & Sound classification

PVC-U & PVC-C pipes ≤ Ø50mm with wall thickness 1.6-3.7mm in maximum aperture 300x300mm **EI 240 U/C & E 240 U/C**

PE, ABS & SAN+PVC pipe ≤ Ø40mm with wall thickness 2.0-2.4mm in maximum aperture 300x300mm **EI 240 U/C & E 240 U/C**

PP pipes ≤ Ø 12mm with wall thickness 1.2mm in maximum aperture 300x300mm **EI 240 U/C & E 240 U/C**

PP pipe ≤ Ø75mm with wall thickness 1.2-2.8mm in maximum aperture pipe Ø + 60mm **EI 180 U/C & E 180 U/C**

PP pipes ≤ Ø75mm with wall thickness 1.2-6.8mm in maximum aperture 300x300mm **EI 90 U/C & E 90 U/C**

Sound reduction (seal only) **62dB**

Protecta®

Polyseam Ltd, 15 St Andrews Road, Huddersfield, West Yorkshire, HD1 6SB
Tel: +44 (0) 148 4421036
Email: post.uk@polyseam.com

Sheet size:	Drawn date & no:
A4	9/4/18
NTS	K.B

Installation Instructions

1. Before installing Protecta® FR Graphite ensure that the surface of all service penetrations and surrounding construction is free from all loose contaminants, dust and grease.
2. When installing any backing material, cut this slightly oversize and insert into the gap ensuring a tight friction fit. Ensure correct depth is achieved.
3. Fill the gap or joint with Protecta® FR Graphite to the required depth.
4. Apply the sealant generously avoiding air bubbles. Finish the bead with a moist spatula or pallet knife. Avoid excessive tooling/smoothing as this may make the seal surface wet and soft.
5. Protecta® FR Graphite can be over-painted with most emulsion or alkyd (gloss) paints.

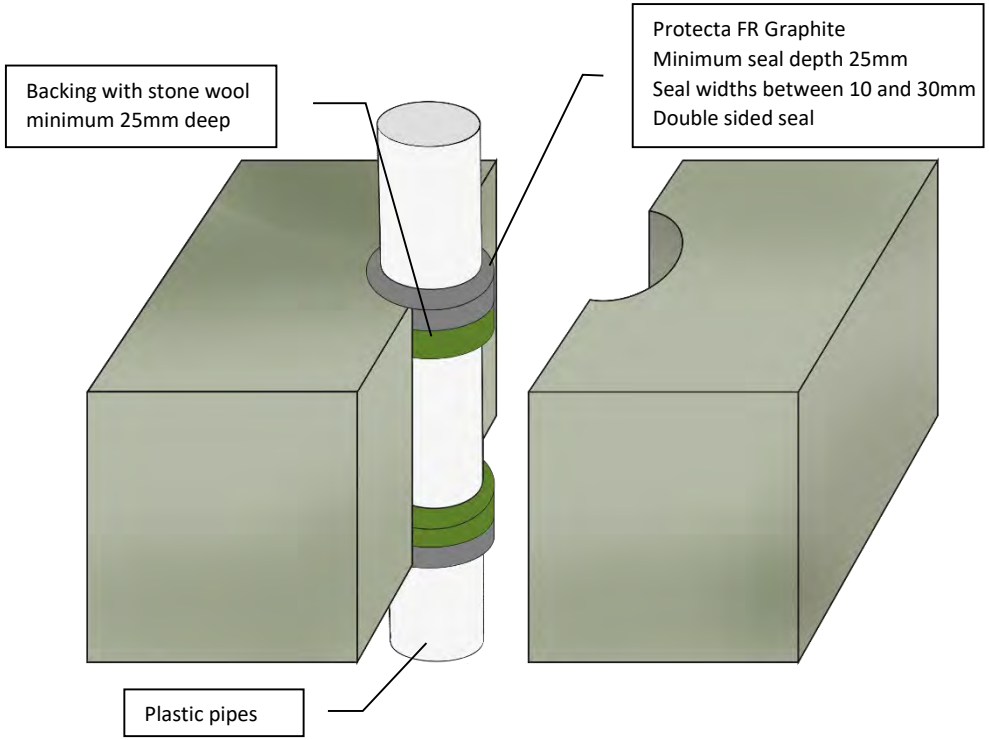

ETA 18/0626

As a part of our policy of on-going product development and testing, we reserve the right to modify, alter or change product specifications without giving notice. All information contained in this document is given in good faith and is provided for guidance only. Any drawings provided are for illustrative purposes only. As Polyseam has no control over the methods or competence of installation and of prevailing site conditions, no warranties, expressed or implied, is intended to be given as to the actual performance of the product mentioned or referred to herein and no liability whatsoever will be accepted for any loss, damage or injury arising from the use of the information given.

For all technical details on the products specified please refer to the technical data sheets that can be found on www.protecta.eu

Signed and approved:

Client:

Job Title:

Products	Protecta FR Graphite Stone wool
Application	Fire stopping of plastic pipes in rigid floors
Construction	Minimum floor thickness of 150 mm and comprise aerated concrete or concrete with a minimum density of 650kg/m³

Fire & Sound classification

PVC-U and PVC-C pipe ≤ 40 mm diameter with wall thickness 1.8-3.7mm	EI 240 U/U
PVC-U and PVC-C pipe ≤ 110 mm diameter with wall thickness 1.8-6.6mm	EI 90 C/U
PE, ABS and SAN+PVC pipe ≤ 40 mm diameter with wall thickness 2.4-3.7mm	EI 60 U/U & EI 240 U/C
PE, ABS and SAN+PVC pipe ≤ 110 mm diameter with wall thickness 2.4-4.2mm	EI 60 U/C
PE, ABS and SAN+PVC pipe ≤ 110 mm diameter with wall thickness 4.3-10.0mm	EI 90 U/C
PE, ABS and SAN+PVC pipe ≤ 110 mm diameter with wall thickness 10.0mm	EI 60 U/U
PP pipe ≤ 40 mm diameter with wall thickness 1.8mm	EI 120 C/C
PP pipe ≤ 110 mm diameter with wall thickness 1.8-6.3mm	EI 30 U/C
Sound reduction (seal only)	53dB

Polyseam Ltd, 15 St Andrews Road, Huddersfield, West Yorkshire, HD1 6SB
Tel: +44 (0) 148 4421036
Email: post.uk@polyseam.com

Sheet size: **A4**	Drawn date & no: 11/11/18
Scale: **NTS**	Drawn by: K.B

Installation Instructions

1. Before installing Protecta® FR Graphite ensure that the surface of all service penetrations and surrounding construction is free from all loose contaminants, dust and grease.
2. When installing any backing material, cut this slightly oversize and insert into the gap ensuring a tight friction fit. Ensure correct depth is achieved.
3. Fill the gap or joint with Protecta® FR Graphite to the required depth.
4. Apply the sealant generously avoiding air bubbles. Finish the bead with a moist spatula or pallet knife. Avoid excessive tooling/smoothing as this may make the seal surface wet and soft.
5. Protecta® FR Graphite can be over-painted with most emulsion or alkyd (gloss) paints.

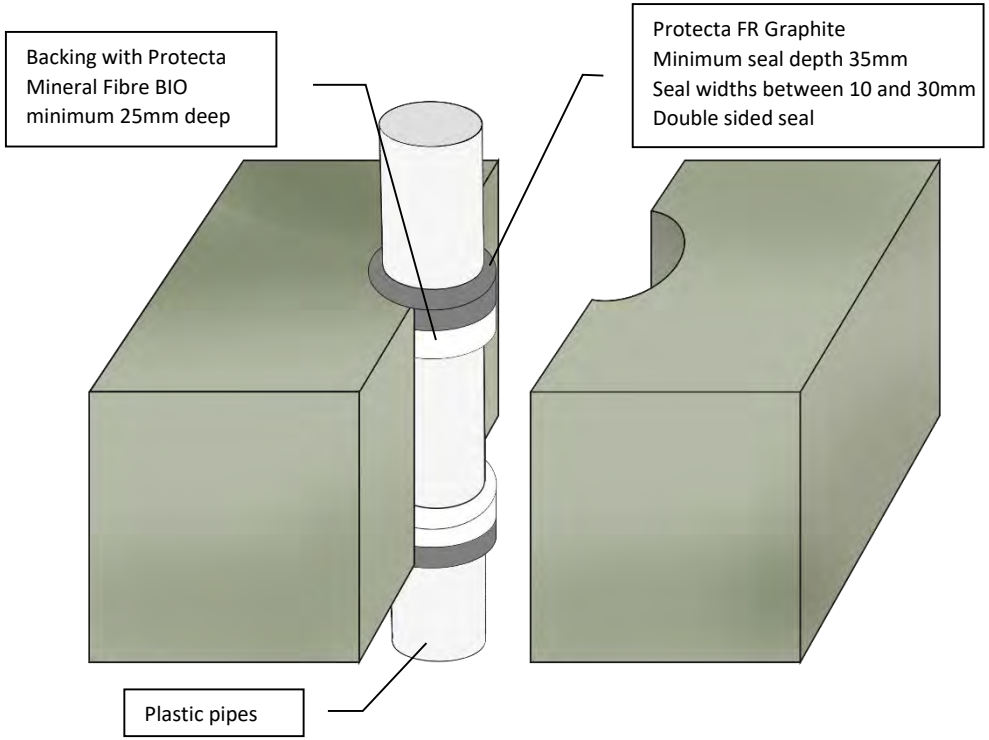

ETA 18/0626

As a part of our policy of on-going product development and testing, we reserve the right to modify, alter or change product specifications without giving notice. All information contained in this document is given in good faith and is provided for guidance only. Any drawings provided are for illustrative purposes only. As Polyseam has no control over the methods or competence of installation and of prevailing site conditions, no warranties, expressed or implied, is intended to be given as to the actual performance of the product mentioned or referred to herein and no liability whatsoever will be accepted for any loss, damage or injury arising from the use of the information given.

For all technical details on the products specified please refer to the technical data sheets that can be found on www.protecta.eu

Signed and approved:

Client:

Job Title:

Products	Protecta FR Graphite Stone wool
Application	Fire stopping of plastic pipes in rigid floors
Construction	Minimum floor thickness of 150 mm and comprise aerated concrete or concrete with a minimum density of 650kg/m^3

Fire & Sound classification

PVC-U and PVC-C pipe ≤ 160 mm diameter with wall thickness 4.0-9.5mm	EI 60 U/C
PE, ABS and SAN+PVC pipe ≤ 160 mm diameter with wall thickness 4.9-14.6mm	EI 30 U/C
PE, ABS and SAN+PVC pipe ≤ 160 mm diameter with wall thickness 14.6mm	EI 60 U/C
Sound reduction (seal only)	53dB

Polyseam Ltd, 15 St Andrews Road,
Huddersfield, West Yorkshire, HD1 6SB
Tel: +44 (0) 148 4421036
Email: post.uk@polyseam.com

Sheet size: **A4**	Drawn date & no: 11/11/18
Scale: **NTS**	Drawn by: K.B

Installation Instructions

1. A single pipe collar is installed on the underside of the floor.
2. Before fitting the pipe collar ensure that the gaps between the pipe and the separating element are sealed.
3. Place a pipe collar around the service penetration (pipe) and ensure that the fixing lugs are positioned tightly to the surface of the floor so that the fixings can be inserted fully.
4. Where the surface is uneven, apply a sealing bead of Protecta® FR Acrylic between the floor and the pipe collar.
5. Attach the pipe collar with steel screws or fixings that are suitable for the substrate that the pipe collar will be fitted to; use ≥ Ø4 x 50mm long masonry screws or expansion bolts.
6. On site where the penetration size is greater than the pipe diameter and/or the pipe is in an angle an oversized collar can be used. Protecta® FR Collars are tested 'oversize', i.e. the internal diameter of the collar can be larger than the pipe.

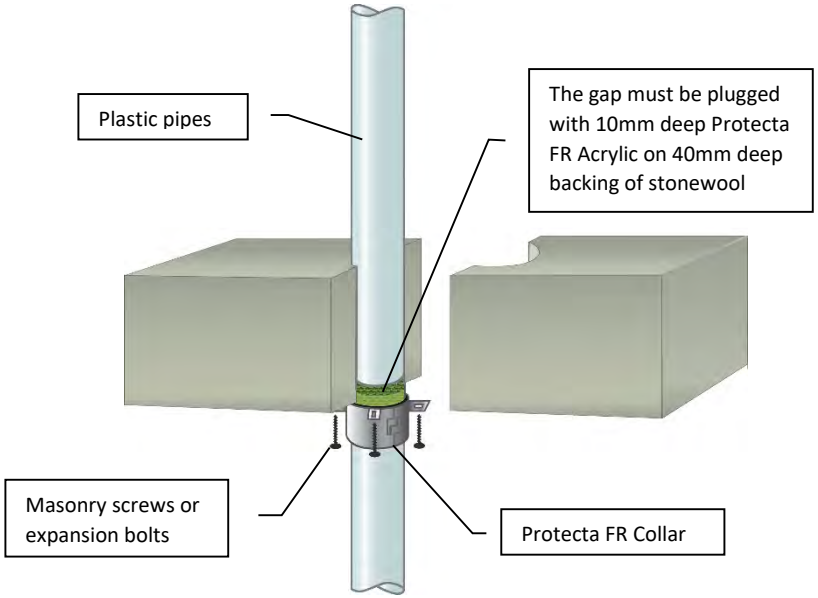

Services	Minimum Collar Height	Classification
≤ Ø110mm PVC-U & PVC-C	30mm	EI 60 C/C, EI 60 U/C, EI 60 C/U, EI 60 U/U
≤ Ø110mm PVC-U & PVC-C	50mm	EI 120 C/C, EI 120 U/C, EI 60 C/U, EI 60 U/U
≤ Ø125mm PVC-U & PVC-C	60mm	EI 120 C/C, EI 120 U/C, EI 60 C/U, EI 60 U/U
≤ Ø160mm PVC-U & PVC-C	60mm	EI 120 C/C, EI 120 U/C, EI 60 C/U, EI 60 U/U
≤ Ø50mm PE, ABS & SAN+PVC	30mm	EI 60 C/C, EI 60 U/C, EI 60 C/U, EI 60 U/U
≤ Ø50mm PE, ABS & SAN+PVC	50mm	EI 120 C/C, EI 120 U/C, EI 60 C/U, EI 60 U/U
≤ Ø110mm PE, ABS & SAN+PVC	50mm	EI 120 C/C, EI 120 U/C, EI 60 C/U, EI 60 U/U
≤ Ø160mm PE, ABS & SAN+PVC	60mm	EI 120 C/C, EI 120 U/C, EI 60 C/U, EI 60 U/U
≤ Ø50mm PP	30mm	EI 120 C/C, EI 120 U/C, EI 120 C/U, EI 120 U/U
≤ Ø110mm PP	50mm	EI 120 C/C, EI 120 U/C, EI 60 C/U, EI 60 U/U
≤ Ø125mm PP	60mm	EI 120 C/C, EI 120 U/C
≤ Ø160mm PP	60mm	EI 180 C/C, EI 180 U/C

ETA 14/0249

Client:

Job Title:

Products Protecta FR Collar

Application Fire stopping of plastic pipes in rigid floors with gap widths of minimum 10mm

Construction Minimum floor thickness of 150 mm and comprise aerated concrete or concrete with a minimum density of 650kg/m³

Fire & Sound classification

Fire classifications in table on the left.

Sound reduction (seal only) 58dB

Polyseam Ltd, 15 St Andrews Road, Huddersfield, West Yorkshire, HD1 6SB
Tel: +44 (0) 148 4421036
Email: post.uk@polyseam.com

For all technical details on the products specified please refer to the technical data sheets that can be found on www.protecta.eu

Signed and approved:

Sheet size:	Drawn date & no:
A4	24/5/18
Scale:	Drawn by:
NTS	K.B

Installation Instructions

1. Before installing Protecta® FR Acrylic ensure that the surface of all service penetrations and surrounding construction is free from all loose contaminants, dust and grease.
2. Where Protecta® FR Acrylic is to be installed against surfaces that cannot tolerate direct contact; appropriate surface preparation should be made (contact Polyseam for guidance in these cases). For paints sensitive to sealing compounds, priming with a PVA primer is recommended.
3. When installing any backing material, cut this slightly oversize and insert into the gap ensuring a tight friction fit. Ensure correct depth is achieved.
4. Fill the gap or joint with Protecta® FR Acrylic to the required depth.
5. Apply the sealant generously to prevent air bubbles. Finish the bead with a moist spatula, pallet knife or brush.
6. Protecta® FR Acrylic can be over-painted with most emulsion or alkyd (gloss) paints.

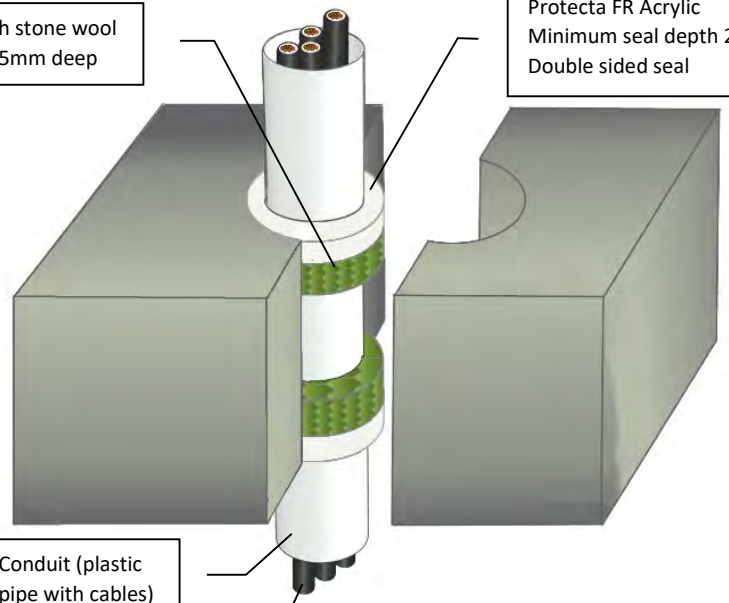

ETA 13/0879 & 13/0880

As a part of our policy of on-going product development and testing, we reserve the right to modify, alter or change product specifications without giving notice. All information contained in this document is given in good faith and is provided for guidance only. Any drawings provided are for illustrative purposes only. As Polyseam has no control over the methods or competence of installation and of prevailing site conditions, no warranties, expressed or implied, is intended to be given as to the actual performance of the product mentioned or referred to herein and no liability whatsoever will be accepted for any loss, damage or injury arising from the use of the information given.

For all technical details on the products specified please refer to the technical data sheets that can be found on www.protecta.eu

Signed and approved:

Client:

Job Title:

Products	Protecta FR Acrylic Stone wool
Application	Fire stopping of conduits in rigid floors
Construction	Minimum floor thickness of 150 mm and comprise aerated concrete or concrete with a minimum density of 650kg/m^3

Fire & Sound classification

PE, ABS & SAN+PVC conduits/pipes ≤ Ø40mm with wall thickness 2.0 – 2.4mm
EI 180 U/C & E 180 U/C

PP conduits/pipes ≤ Ø40mm with wall thickness 1.2 – 1.8mm EI 180 U/C & E 180 U/C

PVC-U & PVC-C conduits/pipes ≤ Ø40mm with wall thickness 1.6 – 3.7mm
EI 240 U/C & E 240 U/C

Sound reduction (seal only) 62dB

Protecta®

Polyseam Ltd, 15 St Andrews Road, Huddersfield, West Yorkshire, HD1 6SB
Tel: +44 (0) 148 4421036
Email: post.uk@polyseam.com

Sheet size: **A4**	Drawn date & no: 9/4/18
Scale: **NTS**	Drawn by: K.B

Installation Instructions

1. Before installing Protecta® FR Graphite ensure that the surface of all service penetrations and surrounding construction is free from all loose contaminants, dust and grease.
2. When installing any backing material, cut this slightly oversize and insert into the gap ensuring a tight friction fit. Ensure correct depth is achieved.
3. Fill the gap or joint with Protecta® FR Graphite to the required depth.
4. Apply the sealant generously avoiding air bubbles. Finish the bead with a moist spatula or pallet knife. Avoid excessive tooling/smoothing as this may make the seal surface wet and soft.
5. Protecta® FR Graphite can be over-painted with most emulsion or alkyd (gloss) paints.

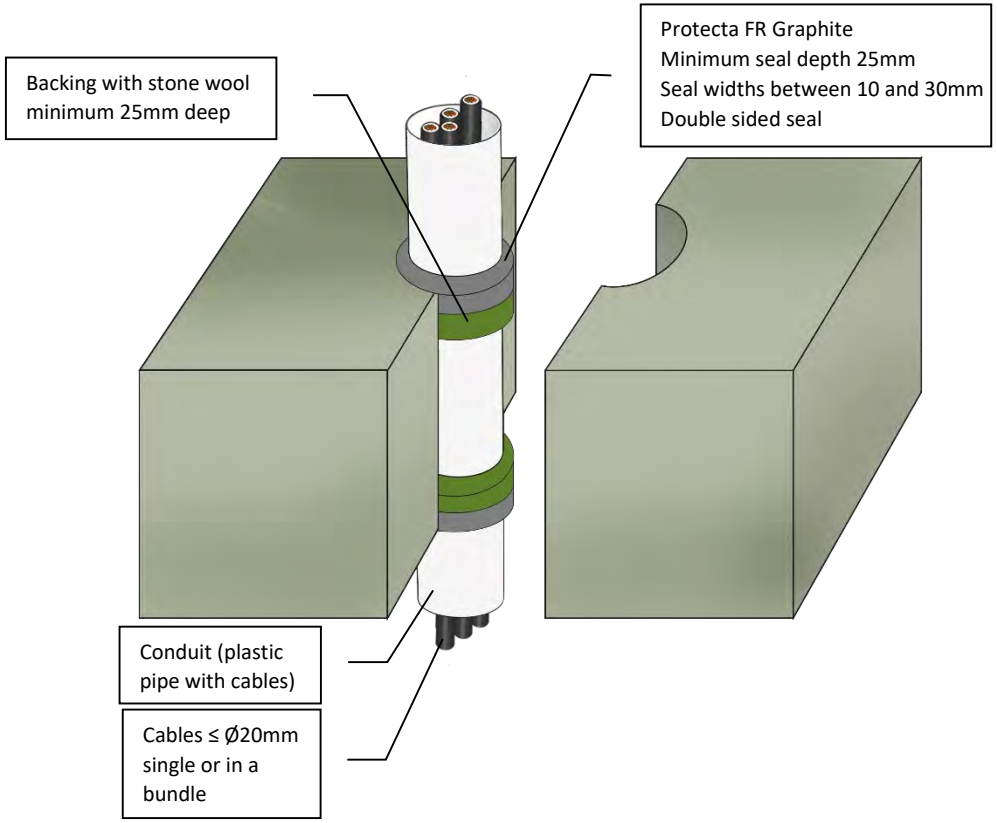

ETA 18/0626

Client:

Job Title:

Products	Protecta FR Graphite Stone wool
Application	Fire stopping of conduits in rigid floors
Construction	Minimum floor thickness of 150 mm and comprise aerated concrete or concrete with a minimum density of 650kg/m³

Fire & Sound classification

PE, ABS & SAN+PVC conduits/pipes ≤ Ø110mm with wall thickness 2.4 - 10.0mm EI 60 U/C

PP conduits/pipes ≤ Ø110mm with wall thickness 2.7mm EI 90 U/C

PVC-U & PVC-C conduits/pipes ≤ Ø110mm with wall thickness 1.8-6.6mm EI 90 U/C

Sound reduction (seal only) Rw 53dB

Polyseam Ltd, 15 St Andrews Road, Huddersfield, West Yorkshire, HD1 6SB
Tel: +44 (0) 148 4421036
Email: post.uk@polyseam.com

For all technical details on the products specified please refer to the technical data sheets that can be found on www.protecta.eu

Signed and approved:

Sheet size: **A4**	Drawn date & no: 11/11/18
Scale: **NTS**	Drawn by: K.B

Installation Instructions

1. Before installing Protecta® FR Acrylic ensure that the surface of all service penetrations and surrounding construction is free from all loose contaminants, dust and grease.
2. Where Protecta® FR Acrylic is to be installed against surfaces that cannot tolerate direct contact; appropriate surface preparation should be made (contact Polyseam for guidance in these cases). For paints sensitive to sealing compounds, priming with a PVA primer is recommended.
3. When installing any backing material, cut this slightly oversize and insert into the gap ensuring a tight friction fit. Ensure correct depth is achieved.
4. Fill the gap or joint with Protecta® FR Acrylic to the required depth.
5. Apply the sealant generously to prevent air bubbles. Finish the bead with a moist spatula, pallet knife or brush.
6. Protecta® FR Acrylic can be over-painted with most emulsion or alkyd (gloss) paints.

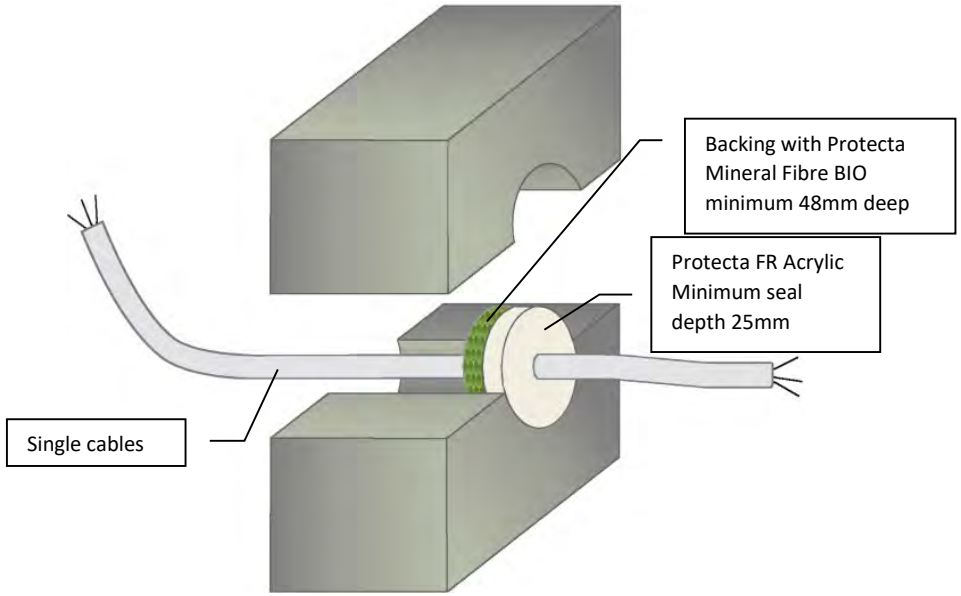

ETA 13/0879 & 13/0880

As a part of our policy of on-going product development and testing, we reserve the right to modify, alter or change product specifications without giving notice. All information contained in this document is given in good faith and is provided for guidance only. Any drawings provided are for illustrative purposes only. As Polyseam has no control over the methods or competence of installation and of prevailing site conditions, no warranties, expressed or implied, is intended to be given as to the actual performance of the product mentioned or referred to herein and no liability whatsoever will be accepted for any loss, damage or injury arising from the use of the information given.

For all technical details on the products specified please refer to the technical data sheets that can be found on www.protecta.eu

Signed and approved:

Client:

Job Title:

Products	Protecta FR Acrylic Protecta Mineral Fibre BIO
Application	Fire stopping of cables in rigid walls
Construction	Minimum wall thickness of 150 mm and comprise concrete, aerated concrete or masonry, with a density of ≥ 650 kg/m³

Fire & Sound classification

Cables ≤ Ø21mm single sided seal in maximum aperture 300x300mm	EI 60 & E 240
Cables ≤ Ø21mm single sided seal in maximum aperture Ø87mm	EI 90 & E 240
Cables ≤ Ø21mm single sided seal in maximum aperture 35x35mm	EI 120 & E 240
Sound reduction (seal only)	62 dB

Polyseam Ltd, 15 St Andrews Road, Huddersfield, West Yorkshire, HD1 6SB
Tel: +44 (0) 148 4421036
Email: post.uk@polyseam.com

Sheet size: **A4**	Drawn date & no: 7/3/15
Scale: **NTS**	Drawn by: K.B

Installation Instructions

1. Before installing Protecta® FR Acrylic ensure that the surface of all service penetrations and surrounding construction is free from all loose contaminants, dust and grease.
2. Where Protecta® FR Acrylic is to be installed against surfaces that cannot tolerate direct contact; appropriate surface preparation should be made (contact Polyseam for guidance in these cases). For paints sensitive to sealing compounds, priming with a PVA primer is recommended.
3. When installing any backing material, cut this slightly oversize and insert into the gap ensuring a tight friction fit. Ensure correct depth is achieved.
4. Fill the gap or joint with Protecta® FR Acrylic to the required depth.
5. Apply the sealant generously to prevent air bubbles. Finish the bead with a moist spatula, pallet knife or brush.
6. Protecta® FR Acrylic can be over-painted with most emulsion or alkyd (gloss) paints.

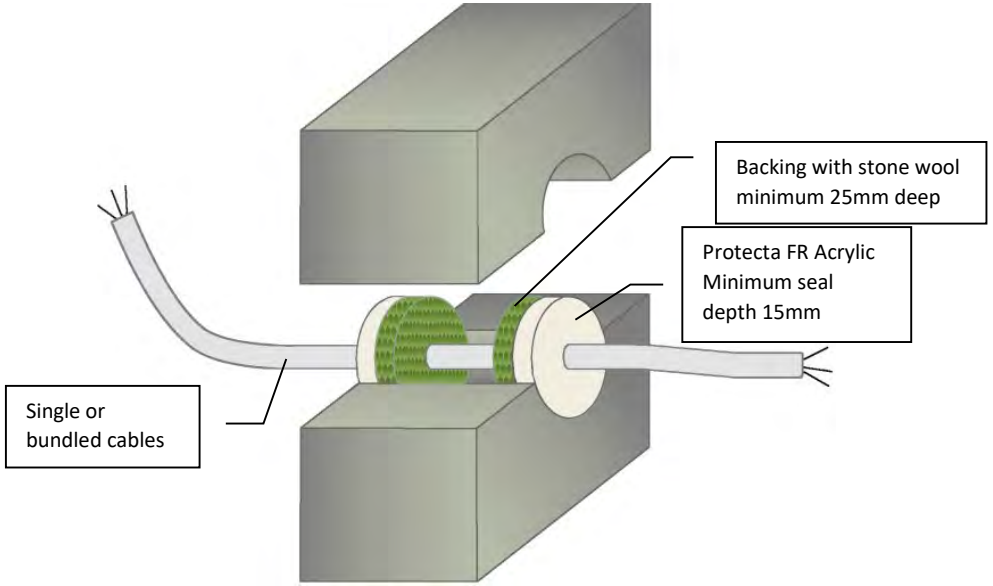

ETA 13/0879 & 13/0880

As a part of our policy of on-going product development and testing, we reserve the right to modify, alter or change product specifications without giving notice. All information contained in this document is given in good faith and is provided for guidance only. Any drawings provided are for illustrative purposes only. As Polyseam has no control over the methods or competence of installation and of prevailing site conditions, no warranties, expressed or implied, is intended to be given as to the actual performance of the product mentioned or referred to herein and no liability whatsoever will be accepted for any loss, damage or injury arising from the use of the information given.

For all technical details on the products specified please refer to the technical data sheets that can be found on www.protecta.eu

Signed and approved:

Client:

Job Title:

Products	Protecta FR Acrylic Stone wool
Application	Fire stopping of cables in rigid walls
Construction	Minimum wall thickness of 150 mm and comprise concrete, aerated concrete or masonry, with a density of ≥ 650 kg/m³

Fire & Sound classification

Cables ≤ Ø21mm single or in a bundle in double sided seal in maximum aperture 300x300mm
EI 120 & E 240

Cables ≤ Ø80mm single or in a bundle in double sided seal in maximum aperture 300x300mm
EI 60 & E 120

Sound reduction (seal only) 62 dB

Protecta®

Polyseam Ltd, 15 St Andrews Road, Huddersfield, West Yorkshire, HD1 6SB
Tel: +44 (0) 148 4421036
Email: post.uk@polyseam.com

Sheet size: **A4**	Drawn date & no: 7/3/15
Scale: **NTS**	Drawn by: K.B

Installation Instructions

1. Before installing Protecta® FR Acrylic ensure that the surface of all service penetrations and surrounding construction is free from all loose contaminants, dust and grease.
2. Where Protecta® FR Acrylic is to be installed against surfaces that cannot tolerate direct contact; appropriate surface preparation should be made (contact Polyseam for guidance in these cases). For paints sensitive to sealing compounds, priming with a PVA primer is recommended.
3. When installing any backing material, cut this slightly oversize and insert into the gap ensuring a tight friction fit. Ensure correct depth is achieved.
4. Fill the gap or joint with Protecta® FR Acrylic to the required depth.
5. Apply the sealant generously to prevent air bubbles. Finish the bead with a moist spatula, pallet knife or brush.
6. Protecta® FR Acrylic can be over-painted with most emulsion or alkyd (gloss) paints.

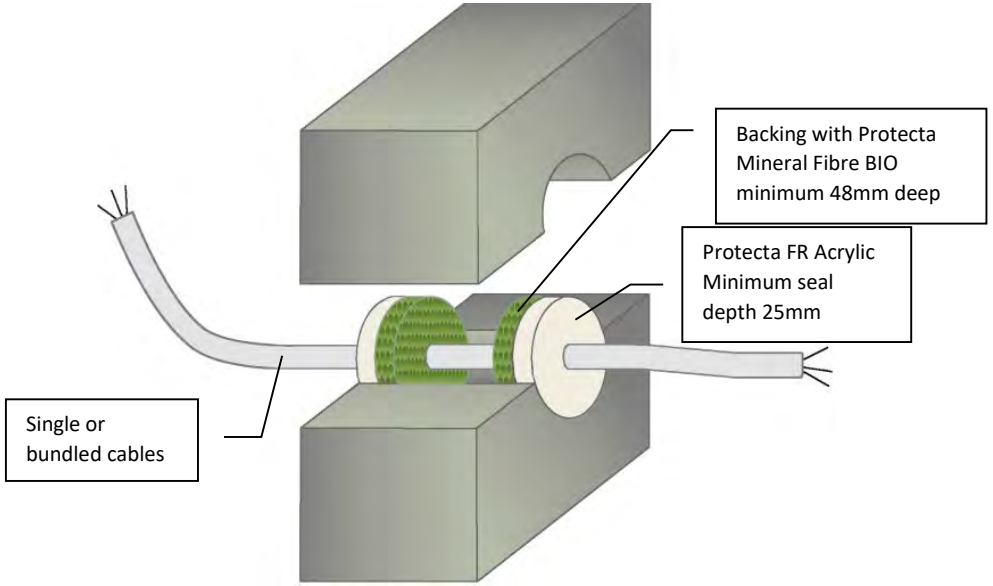

ETA 13/0879 & 13/0880

As a part of our policy of on-going product development and testing, we reserve the right to modify, alter or change product specifications without giving notice. All information contained in this document is given in good faith and is provided for guidance only. Any drawings provided are for illustrative purposes only. As Polyseam has no control over the methods or competence of installation and of prevailing site conditions, no warranties, expressed or implied, is intended to be given as to the actual performance of the product mentioned or referred to herein and no liability whatsoever will be accepted for any loss, damage or injury arising from the use of the information given.

For all technical details on the products specified please refer to the technical data sheets that can be found on www.protecta.eu

Signed and approved:

Client:

Job Title:

Products	Protecta FR Acrylic Protecta Mineral Fibre BIO
Application	Fire stopping of cables in rigid walls
Construction	Minimum wall thickness of 150 mm and comprise concrete, aerated concrete or masonry, with a density of ≥ 650 kg/m³

Fire & Sound classification

Cables ≤ Ø21mm in tied bundles ≤ Ø100mm in double sided seal in maximum aperture 300x300mm
EI 240 & E 240

Cables ≤ Ø80mm single or in a bundle in double sided seal in maximum aperture 300x300mm
EI 60 & E 240

Sound reduction (seal only) 62 dB

Protecta®

Polyseam Ltd, 15 St Andrews Road, Huddersfield, West Yorkshire, HD1 6SB
Tel: +44 (0) 148 4421036
Email: post.uk@polyseam.com

Sheet size: **A4**	Drawn date & no: 7/3/15
Scale: **NTS**	Drawn by: K.B

Installation Instructions

1. Before installing Protecta® FR Acrylic ensure that the surface of all service penetrations and surrounding construction is free from all loose contaminants, dust and grease.
2. Where Protecta® FR Acrylic is to be installed against surfaces that cannot tolerate direct contact; appropriate surface preparation should be made (contact Polyseam for guidance in these cases). For paints sensitive to sealing compounds, priming with a PVA primer is recommended.
3. As Protecta® FR Acrylic is water based, in cases where corrosion protection is a problem; some metals may require a barrier between the sealant and the metal surface prior to this installation.
4. When installing any backing material, cut this slightly oversize and insert into the gap ensuring a tight friction fit. Ensure correct depth is achieved.
5. Fill the gap or joint with Protecta® FR Acrylic to the required depth.
6. Apply the sealant generously to prevent air bubbles. Finish the bead with a moist spatula, pallet knife or brush.
7. Protecta® FR Acrylic can be over-painted with most emulsion or alkyd (gloss) paints.

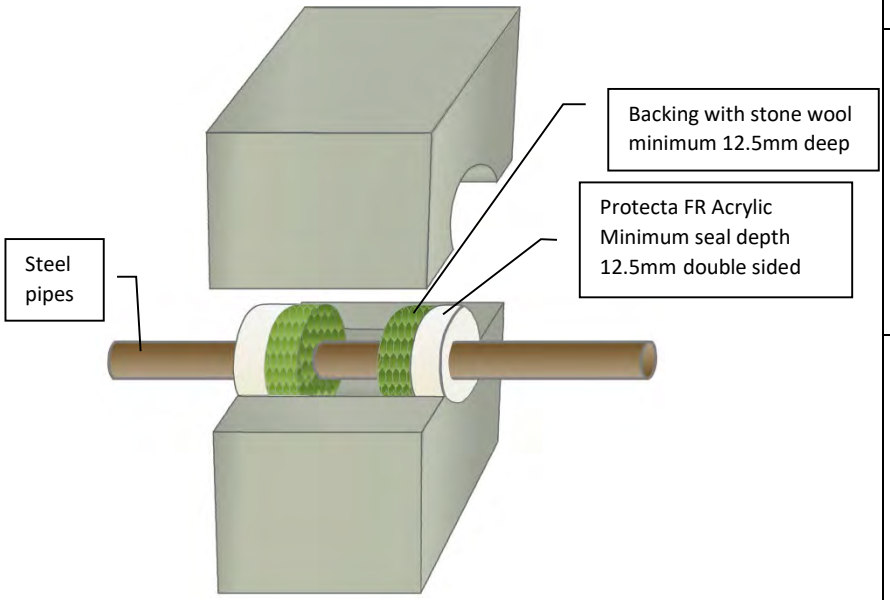

ETA 13/0879 & 13/0880

As a part of our policy of on-going product development and testing, we reserve the right to modify, alter or change product specifications without giving notice. All information contained in this document is given in good faith and is provided for guidance only. Any drawings provided are for illustrative purposes only. As Polyseam has no control over the methods or competence of installation and of prevailing site conditions, no warranties, expressed or implied, is intended to be given as to the actual performance of the product mentioned or referred to herein and no liability whatsoever will be accepted for any loss, damage or injury arising from the use of the information given.

For all technical details on the products specified please refer to the technical data sheets that can be found on www.protecta.eu

Signed and approved:

Client:

Job Title:

Products	Protecta FR Acrylic Stone wool
Application	Fire stopping of steel pipes in rigid walls
Construction	Minimum wall thickness of 100 mm and comprise concrete, aerated concrete or masonry, with a density of ≥ 650 kg/m³

Fire & Sound classification

Steel pipes ≤ Ø30mm without pipe insulation in maximum aperture 300x300mm

EI 90 C/C & E 90 C/C

Sound reduction (seal only)

62dB

Polyseam Ltd, 15 St Andrews Road, Huddersfield, West Yorkshire, HD1 6SB
Tel: +44 (0) 148 4421036
Email: post.uk@polyseam.com

Sheet size: **A4**	Drawn date & no: 8/4/18
Scale: **NTS**	Drawn by: K.B

Installation Instructions

1. Before installing Protecta® FR Acrylic ensure that the surface of all service penetrations and surrounding construction is free from all loose contaminants, dust and grease.
2. Where Protecta® FR Acrylic is to be installed against surfaces that cannot tolerate direct contact; appropriate surface preparation should be made (contact Polyseam for guidance in these cases). For paints sensitive to sealing compounds, priming with a PVA primer is recommended.
3. As Protecta® FR Acrylic is water based, in cases where corrosion protection is a problem; some metals may require a barrier between the sealant and the metal surface prior to this installation.
4. When installing any backing material, cut this slightly oversize and insert into the gap ensuring a tight friction fit. Ensure correct depth is achieved.
5. Fill the gap or joint with Protecta® FR Acrylic to the required depth.
6. Apply the sealant generously to prevent air bubbles. Finish the bead with a moist spatula, pallet knife or brush.
7. Protecta® FR Acrylic can be over-painted with most emulsion or alkyd (gloss) paints.

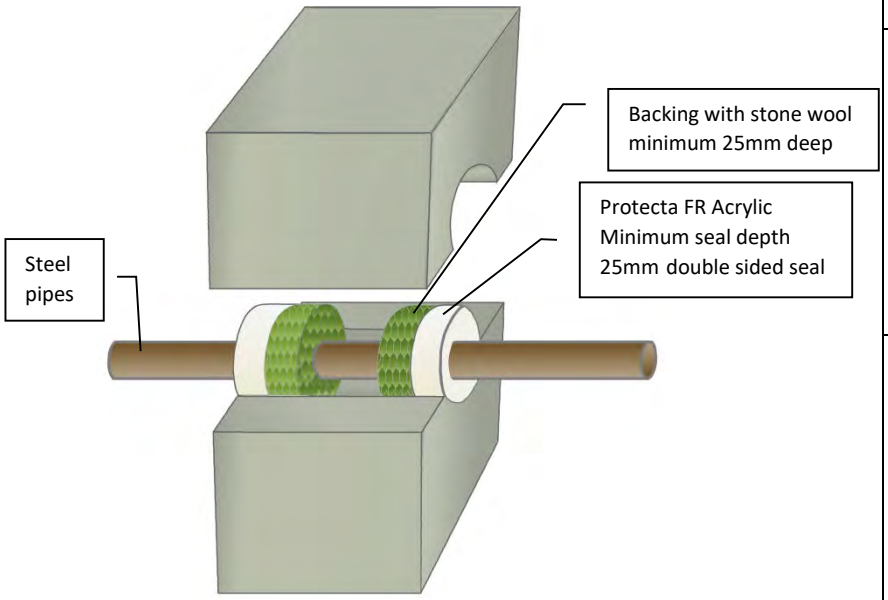

ETA 13/0879 & 13/0880

Client:

Job Title:

Products	Protecta FR Acrylic Stone wool
Application	Fire stopping of steel pipes in rigid walls
Construction	Minimum wall thickness of 100 mm and comprise concrete, aerated concrete or masonry, with a density of ≥ 650 kg/m³

Fire & Sound classification

Steel pipes Ø22 – Ø30mm without pipe insulation in maximum aperture 300x300mm

EI 120 C/C & E 120 C/C

Sound reduction (seal only)

62dB

Polyseam Ltd, 15 St Andrews Road, Huddersfield, West Yorkshire, HD1 6SB
Tel: +44 (0) 148 4421036
Email: post.uk@polyseam.com

For all technical details on the products specified please refer to the technical data sheets that can be found on www.protecta.eu

Signed and approved:

Sheet size: **A4**	Drawn date & no: 8/4/18
Scale: **NTS**	Drawn by: K.B

Installation Instructions

1. Before installing Protecta® FR Acrylic ensure that the surface of all service penetrations and surrounding construction is free from all loose contaminants, dust and grease.
2. Where Protecta® FR Acrylic is to be installed against surfaces that cannot tolerate direct contact; appropriate surface preparation should be made (contact Polyseam for guidance in these cases). For paints sensitive to sealing compounds, priming with a PVA primer is recommended.
3. When installing any backing material, cut this slightly oversize and insert into the gap ensuring a tight friction fit. Ensure correct depth is achieved.
4. Fill the gap or joint with Protecta® FR Acrylic to the required depth.
5. Apply the sealant generously to prevent air bubbles. Finish the bead with a moist spatula, pallet knife or brush.
6. Protecta® FR Acrylic can be over-painted with most emulsion or alkyd (gloss) paints.

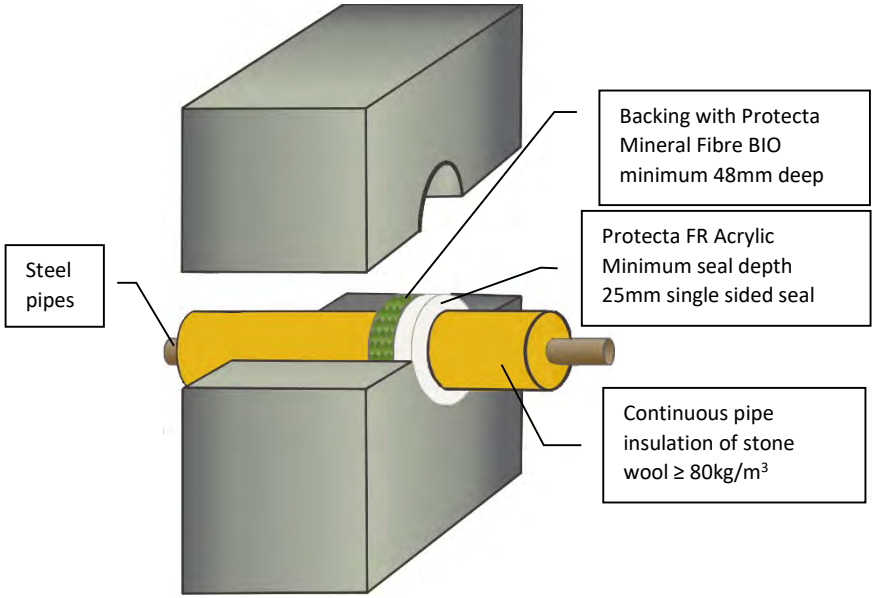

Client:

Job Title:

Products	Protecta FR Acrylic Protecta Mineral Fibre BIO
Application	Fire stopping of steel pipes in rigid walls
Construction	Minimum wall thickness of 150 mm and comprise concrete, aerated concrete or masonry, with a density of ≥ 650 kg/m³

Fire & Sound classification

Steel pipes ≤ Ø40mm with 20mm thick pipe insulation in maximum aperture 300x300mm or Ø505mm

EI 240 C/U & E 240 C/U

Steel pipes ≤ Ø324mm with 20-80mm thick pipe insulation in maximum aperture 300x300mm or Ø505mm

EI 180 C/U & E 180 C/U

Sound reduction (seal only)

62dB

ETA 13/0879 & 13/0880

Polyseam Ltd, 15 St Andrews Road, Huddersfield, West Yorkshire, HD1 6SB
Tel: +44 (0) 148 4421036
Email: post.uk@polyseam.com

For all technical details on the products specified please refer to the technical data sheets that can be found on www.protecta.eu

Signed and approved:

Sheet size: **A4**	Drawn date & no: 9/4/18
Scale: **NTS**	Drawn by: K.B

Installation Instructions

1. Before installing Protecta® FR Acrylic ensure that the surface of all service penetrations and surrounding construction is free from all loose contaminants, dust and grease.
2. Where Protecta® FR Acrylic is to be installed against surfaces that cannot tolerate direct contact; appropriate surface preparation should be made (contact Polyseam for guidance in these cases). For paints sensitive to sealing compounds, priming with a PVA primer is recommended.
3. When installing any backing material, cut this slightly oversize and insert into the gap ensuring a tight friction fit. Ensure correct depth is achieved.
4. Fill the gap or joint with Protecta® FR Acrylic to the required depth.
5. Apply the sealant generously to prevent air bubbles. Finish the bead with a moist spatula, pallet knife or brush.
6. Protecta® FR Acrylic can be over-painted with most emulsion or alkyd (gloss) paints.

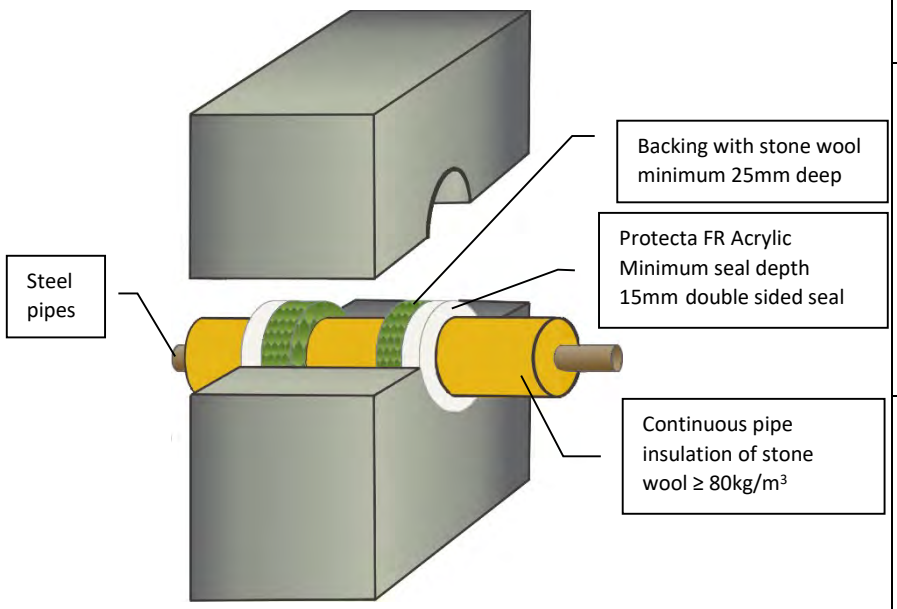

Client:

Job Title:

Products	Protecta FR Acrylic Stone wool
Application	Fire stopping of steel pipes in rigid walls
Construction	Minimum wall thickness of 150 mm and comprise concrete, aerated concrete or masonry, with a density of ≥ 650 kg/m³

Fire & Sound classification

Steel pipes ≤ Ø324mm with 20-80mm thick pipe insulation in maximum aperture 300x300mm or Ø505mm

EI 240 C/U & E 240 C/U

Sound reduction (seal only)

62dB

ETA 13/0879 & 13/0880

Polyseam Ltd, 15 St Andrews Road, Huddersfield, West Yorkshire, HD1 6SB
Tel: +44 (0) 148 4421036
Email: post.uk@polyseam.com

For all technical details on the products specified please refer to the technical data sheets that can be found on www.protecta.eu

Signed and approved:

Sheet size: **A4**	Drawn date & no: 20/4/15
Scale: **NTS**	Drawn by: K.B

Installation Instructions

1. Before installing Protecta® FR Acrylic ensure that the surface of all service penetrations and surrounding construction is free from all loose contaminants, dust and grease.
2. Where Protecta® FR Acrylic is to be installed against surfaces that cannot tolerate direct contact; appropriate surface preparation should be made (contact Polyseam for guidance in these cases). For paints sensitive to sealing compounds, priming with a PVA primer is recommended.
3. As Protecta® FR Acrylic is water based, in cases where corrosion protection is a problem; some metals may require a barrier between the sealant and the metal surface prior to this installation.
4. When installing any backing material, cut this slightly oversize and insert into the gap ensuring a tight friction fit. Ensure correct depth is achieved.
5. Fill the gap or joint with Protecta® FR Acrylic to the required depth.
6. Apply the sealant generously to prevent air bubbles. Finish the bead with a moist spatula, pallet knife or brush.
7. Protecta® FR Acrylic can be over-painted with most emulsion or alkyd (gloss) paints.

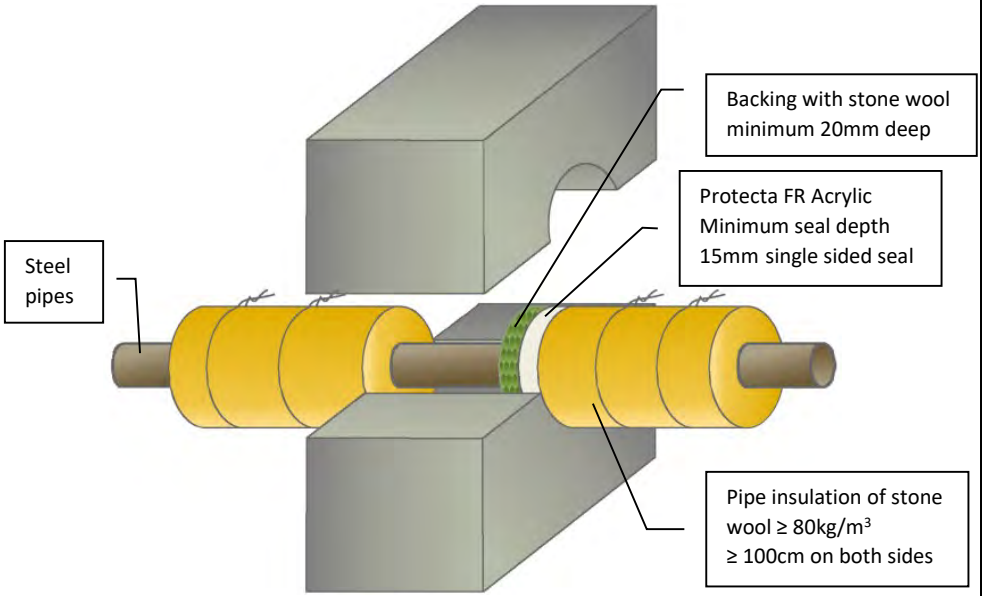

Client:

Job Title:

Products	Protecta FR Acrylic Stone wool
Application	Fire stopping of steel pipes in rigid walls
Construction	Minimum wall thickness of 150 mm and comprise concrete, aerated concrete or masonry, with a density of ≥ 650 kg/m³

Fire & Sound classification

Steel pipes ≤ Ø40mm with ≥ 20mm thick pipe insulation in maximum aperture 300x300mm
EI 60 C/U & E 240 C/U

Steel pipes ≤ Ø40mm with ≥ 20mm thick pipe insulation in maximum aperture pipe Ø + 36mm
EI 240 C/U & E 240 C/U

Steel pipes ≤ Ø219mm with ≥ 30mm thick pipe insulation in maximum aperture 300x300mm
EI 60 C/U & E 180 C/U

Steel pipes ≤ Ø219mm with ≥ 30mm thick pipe insulation in maximum aperture pipe Ø + 36mm
EI 90 C/U & E 180 C/U

Sound reduction (seal only)
62dB

ETA 13/0879 & 13/0880

Polyseam Ltd, 15 St Andrews Road,
Huddersfield, West Yorkshire, HD1 6SB
Tel: +44 (0) 148 4421036
Email: post.uk@polyseam.com

For all technical details on the products specified please refer to the technical data sheets that can be found on www.protecta.eu

Signed and approved:

Sheet size: **A4**	Drawn date & no: 7/3/15
Scale: **NTS**	Drawn by: K.B

Installation Instructions

1. Before installing Protecta® FR Acrylic ensure that the surface of all service penetrations and surrounding construction is free from all loose contaminants, dust and grease.
2. Where Protecta® FR Acrylic is to be installed against surfaces that cannot tolerate direct contact; appropriate surface preparation should be made (contact Polyseam for guidance in these cases). For paints sensitive to sealing compounds, priming with a PVA primer is recommended.
3. As Protecta® FR Acrylic is water based, in cases where corrosion protection is a problem; some metals may require a barrier between the sealant and the metal surface prior to this installation.
4. When installing any backing material, cut this slightly oversize and insert into the gap ensuring a tight friction fit. Ensure correct depth is achieved.
5. Fill the gap or joint with Protecta® FR Acrylic to the required depth.
6. Apply the sealant generously to prevent air bubbles. Finish the bead with a moist spatula, pallet knife or brush.
7. Protecta® FR Acrylic can be over-painted with most emulsion or alkyd (gloss) paints.

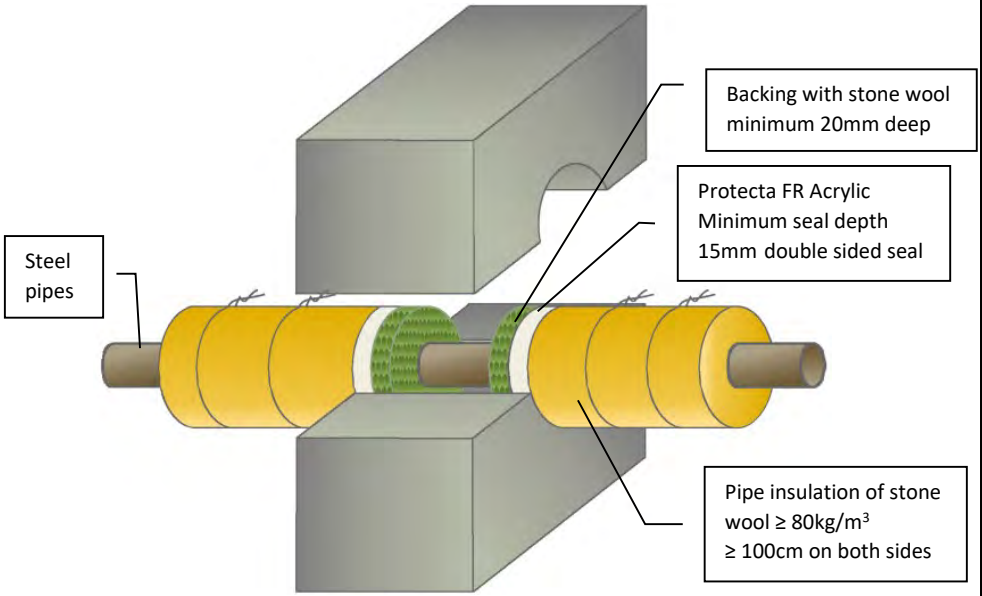

ETA 13/0879 & 13/0880

Client:

Job Title:

Products	Protecta FR Acrylic Stone wool
Application	Fire stopping of steel pipes in rigid walls
Construction	Minimum wall thickness of 150 mm and comprise concrete, aerated concrete or masonry, with a density of ≥ 650 kg/m³

Fire & Sound classification

Steel pipes ≤ Ø219mm with ≥ 30mm thick pipe insulation in maximum aperture 300x300mm

EI 120 C/U & E 240 C/U

Sound reduction (seal only)

62dB

Polyseam Ltd, 15 St Andrews Road, Huddersfield, West Yorkshire, HD1 6SB
Tel: +44 (0) 148 4421036
Email: post.uk@polyseam.com

For all technical details on the products specified please refer to the technical data sheets that can be found on www.protecta.eu

Signed and approved:

Sheet size: **A4**	Drawn date & no: 7/3/15
Scale: **NTS**	Drawn by: K.B

Installation Instructions

1. Before installing Protecta® FR Acrylic ensure that the surface of all service penetrations and surrounding construction is free from all loose contaminants, dust and grease.
2. Where Protecta® FR Acrylic is to be installed against surfaces that cannot tolerate direct contact; appropriate surface preparation should be made (contact Polyseam for guidance in these cases). For paints sensitive to sealing compounds, priming with a PVA primer is recommended.
3. When installing any backing material, cut this slightly oversize and insert into the gap ensuring a tight friction fit. Ensure correct depth is achieved.
4. Fill the gap or joint with Protecta® FR Acrylic to the required depth.
5. Apply the sealant generously to prevent air bubbles. Finish the bead with a moist spatula, pallet knife or brush.
6. Protecta® FR Acrylic can be over-painted with most emulsion or alkyd (gloss) paints.

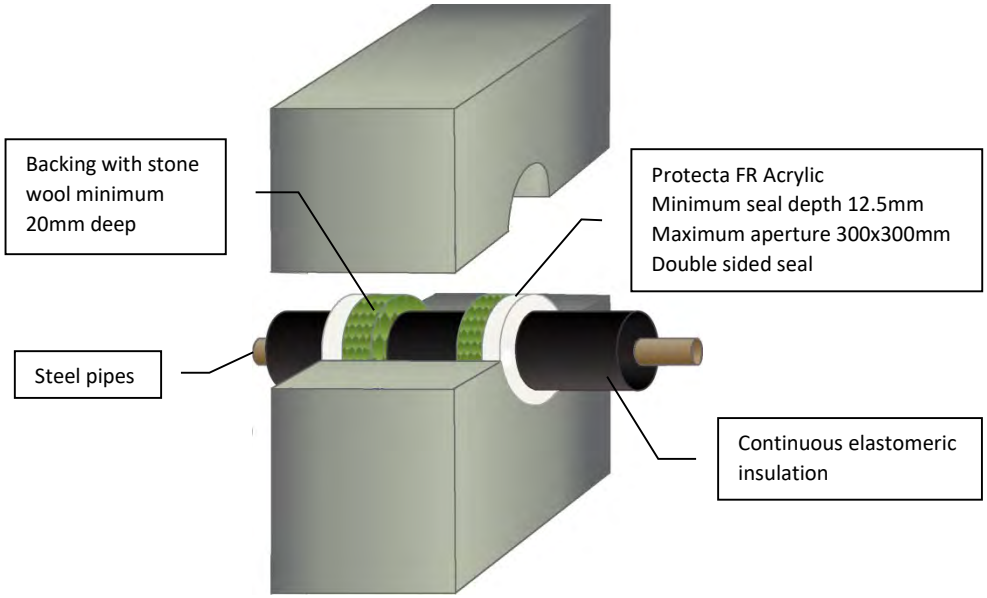

ETA 13/0879 & 13/0880

As a part of our policy of on-going product development and testing, we reserve the right to modify, alter or change product specifications without giving notice. All information contained in this document is given in good faith and is provided for guidance only. Any drawings provided are for illustrative purposes only. As Polyseam has no control over the methods or competence of installation and of prevailing site conditions, no warranties, expressed or implied, is intended to be given as to the actual performance of the product mentioned or referred to herein and no liability whatsoever will be accepted for any loss, damage or injury arising from the use of the information given.

For all technical details on the products specified please refer to the technical data sheets that can be found on www.protecta.eu

Signed and approved:

Client:

Job Title:

Products	Protecta FR Acrylic Stone wool
Application	Fire stopping of steel pipes in rigid walls
Construction	Minimum wall thickness of 100 mm and comprise concrete, aerated concrete or masonry, with a density of ≥ 650 kg/m³

Fire & Sound classification

Steel pipes ≤ Ø40mm with 13 – 19mm thick pipe insulation

EI 120 C/C & E 120 C/C

Sound reduction (seal only)

62dB

Polyseam Ltd, 15 St Andrews Road, Huddersfield, West Yorkshire, HD1 6SB
Tel: +44 (0) 148 4421036
Email: post.uk@polyseam.com

Sheet size: **A4**	Drawn date & no: 7/3/15
Scale: **NTS**	Drawn by: K.B

Installation Instructions

1. Before installing Protecta® FR Acrylic ensure that the surface of all service penetrations and surrounding construction is free from all loose contaminants, dust and grease.
2. Where Protecta® FR Acrylic is to be installed against surfaces that cannot tolerate direct contact; appropriate surface preparation should be made (contact Polyseam for guidance in these cases). For paints sensitive to sealing compounds, priming with a PVA primer is recommended.
3. When installing any backing material, cut this slightly oversize and insert into the gap ensuring a tight friction fit. Ensure correct depth is achieved.
4. Fill the gap or joint with Protecta® FR Acrylic to the required depth.
5. Apply the sealant generously to prevent air bubbles. Finish the bead with a moist spatula, pallet knife or brush.
6. Protecta® FR Acrylic can be over-painted with most emulsion or alkyd (gloss) paints.

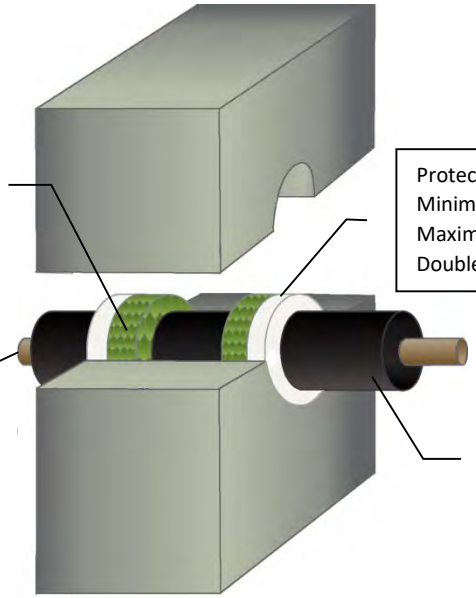

ETA 13/0879 & 13/0880

Client:

Job Title:

Products	Protecta FR Acrylic Protecta Mineral Fibre BIO
Application	Fire stopping of steel pipes in rigid walls
Construction	Minimum wall thickness of 100 mm and comprise concrete, aerated concrete or masonry, with a density of ≥ 650 kg/m³

Fire & Sound classification

Steel pipes ≤ Ø165mm with 13 – 19mm thick pipe insulation

EI 60 C/C & E 120 C/C

Sound reduction (seal only)

62dB

Polyseam Ltd, 15 St Andrews Road, Huddersfield, West Yorkshire, HD1 6SB
Tel: +44 (0) 148 4421036
Email: post.uk@polyseam.com

For all technical details on the products specified please refer to the technical data sheets that can be found on www.protecta.eu

Signed and approved:

Sheet size: **A4**	Drawn date & no: 7/3/15
Scale: **NTS**	Drawn by: K.B

Installation Instructions

1. Before installing Protecta® FR Acrylic ensure that the surface of all service penetrations and surrounding construction is free from all loose contaminants, dust and grease.
2. Where Protecta® FR Acrylic is to be installed against surfaces that cannot tolerate direct contact; appropriate surface preparation should be made (contact Polyseam for guidance in these cases). For paints sensitive to sealing compounds, priming with a PVA primer is recommended.
3. When installing any backing material, cut this slightly oversize and insert into the gap ensuring a tight friction fit. Ensure correct depth is achieved.
4. Fill the gap or joint with Protecta® FR Acrylic to the required depth.
5. Apply the sealant generously to prevent air bubbles. Finish the bead with a moist spatula, pallet knife or brush.
6. Protecta® FR Acrylic can be over-painted with most emulsion or alkyd (gloss) paints.

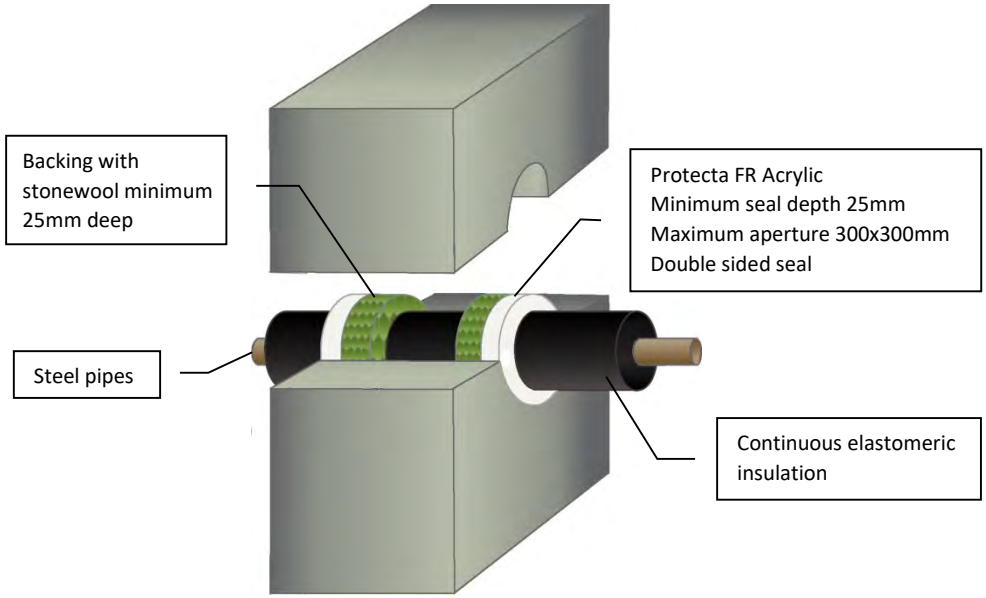

ETA 13/0879 & 13/0880

Client:

Job Title:

Products	Protecta FR Acrylic Protecta Mineral Fibre BIO
Application	Fire stopping of steel pipes in rigid walls
Construction	Minimum wall thickness of 100 mm and comprise concrete, aerated concrete or masonry, with a density of ≥ 650 kg/m³

Fire & Sound classification

Steel pipes ≤ Ø22mm with 13mm thick pipe insulation EI 180 C/U & E 240 C/U

Steel pipes ≤ Ø114mm with 13 – 25mm thick pipe insulation EI 90 C/U & E 120 C/U

Steel pipes ≤ Ø114mm with 26 – 50mm thick pipe insulation EI 60 C/U & E 60 C/U

Sound reduction (seal only) 62dB

Polyseam Ltd, 15 St Andrews Road, Huddersfield, West Yorkshire, HD1 6SB
Tel: +44 (0) 148 4421036
Email: post.uk@polyseam.com

For all technical details on the products specified please refer to the technical data sheets that can be found on www.protecta.eu

Signed and approved:

Sheet size: **A4**	Drawn date & no: 9/4/18
Scale: **NTS**	Drawn by: K.B

Installation Instructions

1. Before installing Protecta® FR Acrylic ensure that the surface of all service penetrations and surrounding construction is free from all loose contaminants, dust and grease.
2. Where Protecta® FR Acrylic is to be installed against surfaces that cannot tolerate direct contact; appropriate surface preparation should be made (contact Polyseam for guidance in these cases). For paints sensitive to sealing compounds, priming with a PVA primer is recommended.
3. As Protecta® FR Acrylic is water based, in cases where corrosion protection is a problem; some metals may require a barrier between the sealant and the metal surface prior to this installation.
4. When installing any backing material, cut this slightly oversize and insert into the gap ensuring a tight friction fit. Ensure correct depth is achieved.
5. Fill the gap or joint with Protecta® FR Acrylic to the required depth.
6. Apply the sealant generously to prevent air bubbles. Finish the bead with a moist spatula, pallet knife or brush.
7. Protecta® FR Acrylic can be over-painted with most emulsion or alkyd (gloss) paints.

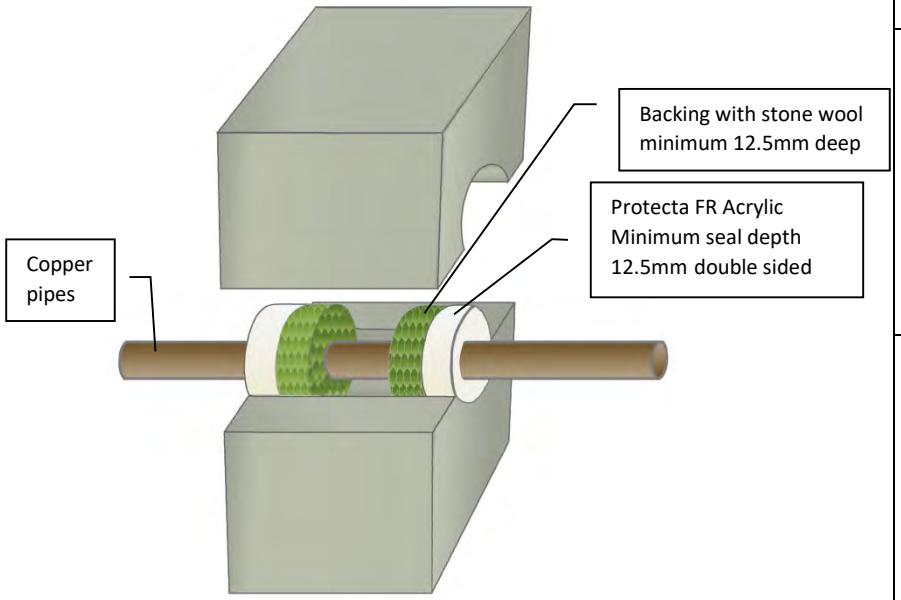

ETA 13/0879 & 13/0880

Client:

Job Title:

Products	Protecta FR Acrylic Stone wool
Application	Fire stopping of copper pipes in rigid walls
Construction	Minimum wall thickness of 100 mm and comprise concrete, aerated concrete or masonry, with a density of ≥ 650 kg/m³

Fire & Sound classification

Copper pipes ≤ Ø6mm without pipe insulation in maximum aperture 300x300mm
EI 60 C/C & E 90 C/C

Copper pipes ≤ Ø22mm without pipe insulation in maximum aperture 300x300mm
EI 30 C/C & E 90 C/C

Sound reduction (seal only) 62dB

Polyseam Ltd, 15 St Andrews Road, Huddersfield, West Yorkshire, HD1 6SB
Tel: +44 (0) 148 4421036
Email: post.uk@polyseam.com

For all technical details on the products specified please refer to the technical data sheets that can be found on www.protecta.eu

Signed and approved:

Sheet size: **A4**	Drawn date & no: 8/4/18
Scale: **NTS**	Drawn by: K.B

Installation Instructions

1. Before installing Protecta® FR Acrylic ensure that the surface of all service penetrations and surrounding construction is free from all loose contaminants, dust and grease.
2. Where Protecta® FR Acrylic is to be installed against surfaces that cannot tolerate direct contact; appropriate surface preparation should be made (contact Polyseam for guidance in these cases). For paints sensitive to sealing compounds, priming with a PVA primer is recommended.
3. As Protecta® FR Acrylic is water based, in cases where corrosion protection is a problem; some metals may require a barrier between the sealant and the metal surface prior to this installation.
4. When installing any backing material, cut this slightly oversize and insert into the gap ensuring a tight friction fit. Ensure correct depth is achieved.
5. Fill the gap or joint with Protecta® FR Acrylic to the required depth.
6. Apply the sealant generously to prevent air bubbles. Finish the bead with a moist spatula, pallet knife or brush.
7. Protecta® FR Acrylic can be over-painted with most emulsion or alkyd (gloss) paints.

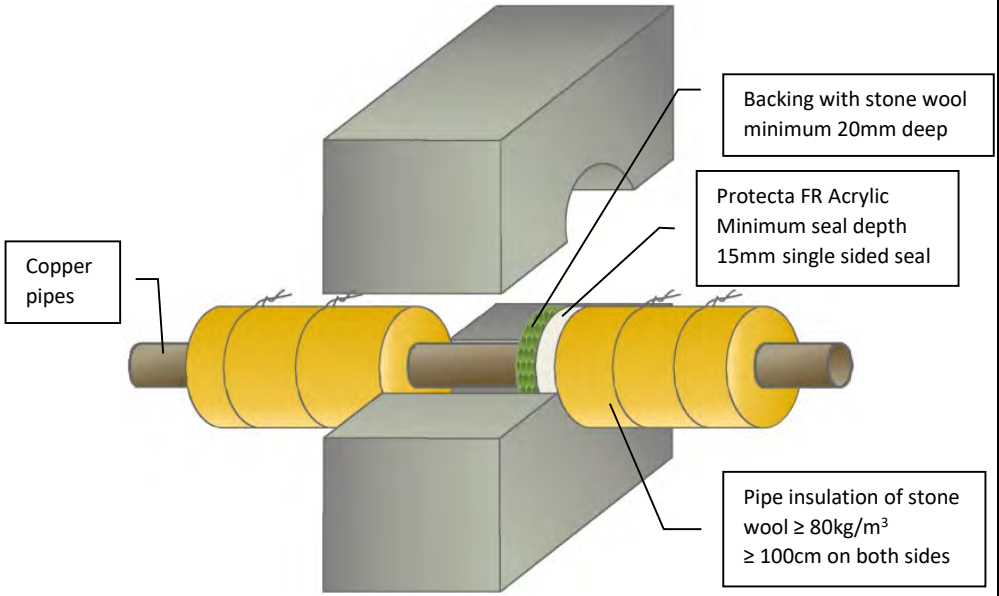

Client:

Job Title:

Products	Protecta FR Acrylic Stone wool
Application	Fire stopping of copper pipes in rigid walls
Construction	Minimum wall thickness of 150 mm and comprise concrete, aerated concrete or masonry, with a density of ≥ 650 kg/m³

Fire & Sound classification

Copper pipes ≤ Ø12mm with ≥ 20mm thick pipe insulation in maximum aperture pipe Ø + 16mm
EI 240 C/U & E 240 C/U

Copper pipes ≤ Ø54mm with ≥ 20mm thick pipe insulation in maximum aperture 300x300mm
EI 60 C/U & E 240 C/U

Copper pipes ≤ Ø54mm with ≥ 20mm thick pipe insulation in maximum aperture pipe Ø + 18mm
EI 180 C/U & E 240 C/U

Sound reduction (seal only)
62dB

ETA 13/0879 & 13/0880

Polyseam Ltd, 15 St Andrews Road, Huddersfield, West Yorkshire, HD1 6SB
Tel: +44 (0) 148 4421036
Email: post.uk@polyseam.com

For all technical details on the products specified please refer to the technical data sheets that can be found on www.protecta.eu

Signed and approved:

Sheet size: **A4**	Drawn date & no: 9/3/15
Scale: **NTS**	Drawn by: K.B

Installation Instructions

1. Before installing Protecta® FR Acrylic ensure that the surface of all service penetrations and surrounding construction is free from all loose contaminants, dust and grease.
2. Where Protecta® FR Acrylic is to be installed against surfaces that cannot tolerate direct contact; appropriate surface preparation should be made (contact Polyseam for guidance in these cases). For paints sensitive to sealing compounds, priming with a PVA primer is recommended.
3. As Protecta® FR Acrylic is water based, in cases where corrosion protection is a problem; some metals may require a barrier between the sealant and the metal surface prior to this installation.
4. When installing any backing material, cut this slightly oversize and insert into the gap ensuring a tight friction fit. Ensure correct depth is achieved.
5. Fill the gap or joint with Protecta® FR Acrylic to the required depth.
6. Apply the sealant generously to prevent air bubbles. Finish the bead with a moist spatula, pallet knife or brush.
7. Protecta® FR Acrylic can be over-painted with most emulsion or alkyd (gloss) paints.

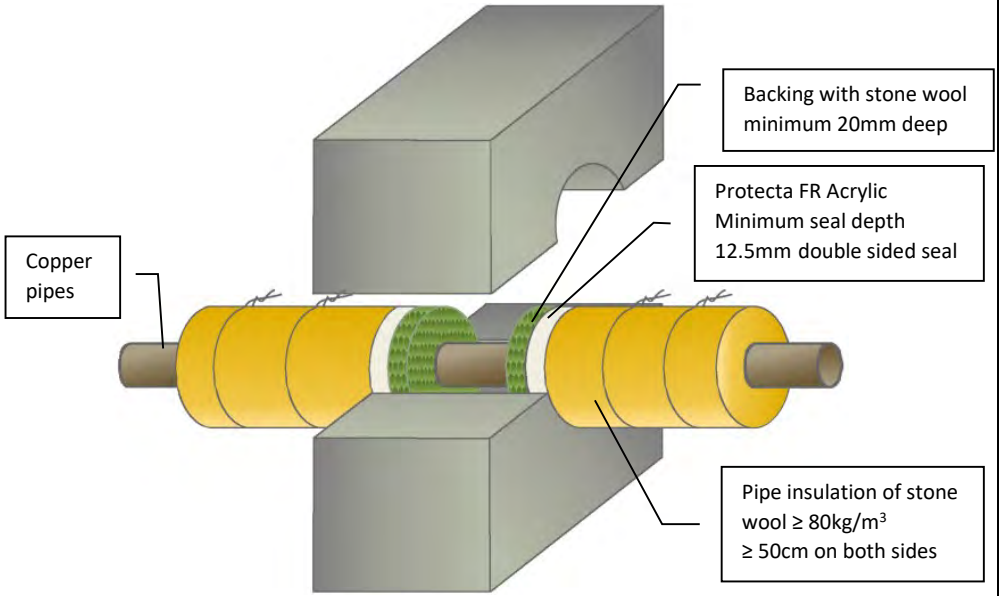

ETA 13/0879 & 13/0880

Client:

Job Title:

Products	Protecta FR Acrylic Stone wool
Application	Fire stopping of copper pipes in rigid walls
Construction	Minimum wall thickness of 100 mm and comprise concrete, aerated concrete or masonry, with a density of ≥ 650 kg/m³

Fire & Sound classification

Copper pipes ≤ Ø54mm with ≥ 20mm thick pipe insulation in maximum aperture 300x300mm

EI 120 C/U & E 120 C/U

Sound reduction (seal only)

62dB

Polyseam Ltd, 15 St Andrews Road, Huddersfield, West Yorkshire, HD1 6SB
Tel: +44 (0) 148 4421036
Email: post.uk@polyseam.com

For all technical details on the products specified please refer to the technical data sheets that can be found on www.protecta.eu

Signed and approved:

Sheet size: **A4**	Drawn date & no: 9/3/15
Scale: **NTS**	Drawn by: K.B

Installation Instructions

1. Before installing Protecta® FR Acrylic ensure that the surface of all service penetrations and surrounding construction is free from all loose contaminants, dust and grease.
2. Where Protecta® FR Acrylic is to be installed against surfaces that cannot tolerate direct contact; appropriate surface preparation should be made (contact Polyseam for guidance in these cases). For paints sensitive to sealing compounds, priming with a PVA primer is recommended.
3. When installing any backing material, cut this slightly oversize and insert into the gap ensuring a tight friction fit. Ensure correct depth is achieved.
4. Fill the gap or joint with Protecta® FR Acrylic to the required depth.
5. Apply the sealant generously to prevent air bubbles. Finish the bead with a moist spatula, pallet knife or brush.
6. Protecta® FR Acrylic can be over-painted with most emulsion or alkyd (gloss) paints.

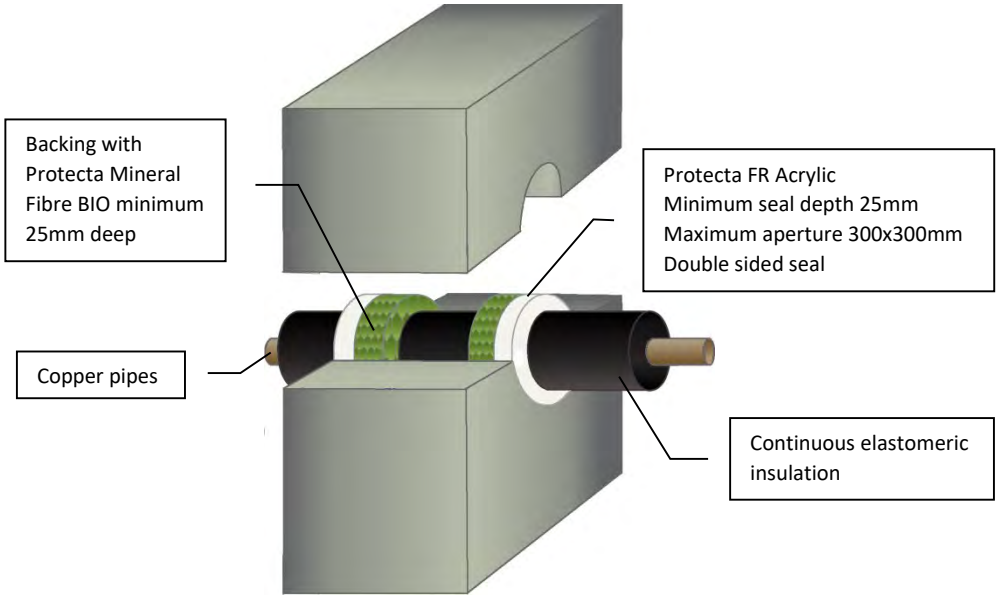

ETA 13/0879 & 13/0880

As a part of our policy of on-going product development and testing, we reserve the right to modify, alter or change product specifications without giving notice. All information contained in this document is given in good faith and is provided for guidance only. Any drawings provided are for illustrative purposes only. As Polyseam has no control over the methods or competence of installation and of prevailing site conditions, no warranties, expressed or implied, is intended to be given as to the actual performance of the product mentioned or referred to herein and no liability whatsoever will be accepted for any loss, damage or injury arising from the use of the information given.

For all technical details on the products specified please refer to the technical data sheets that can be found on www.protecta.eu

Signed and approved:

Client:

Job Title:

Products	Protecta FR Acrylic Protecta Mineral Fibre BIO
Application	Fire stopping of copper pipes in rigid walls
Construction	Minimum wall thickness of 100 mm and comprise concrete, aerated concrete or masonry, with a density of ≥ 650 kg/m³

Fire & Sound classification

Copper pipes ≤ Ø12mm with 9mm thick pipe insulation	EI 120 C/C & E 120 C/C
Copper pipes ≤ Ø54mm with 9-13mm thick pipe insulation	EI 60 C/C & E 120 C/C
Copper pipes ≤ Ø54mm with 14-25mm thick pipe insulation	EI 60 C/C & E 60 C/C
Sound reduction (seal only)	62dB

Protecta®

Polyseam Ltd, 15 St Andrews Road, Huddersfield, West Yorkshire, HD1 6SB
Tel: +44 (0) 148 4421036
Email: post.uk@polyseam.com

Sheet size: **A4**	Drawn date & no: 9/3/15
Scale: **NTS**	Drawn by: K.B

Installation Instructions

1. Before installing Protecta® FR Acrylic ensure that the surface of all service penetrations and surrounding construction is free from all loose contaminants, dust and grease.
2. Where Protecta® FR Acrylic is to be installed against surfaces that cannot tolerate direct contact; appropriate surface preparation should be made (contact Polyseam for guidance in these cases). For paints sensitive to sealing compounds, priming with a PVA primer is recommended.
3. As Protecta® FR Acrylic is water based, in cases where corrosion protection is a problem; some metals may require a barrier between the sealant and the metal surface prior to this installation.
4. When installing any backing material, cut this slightly oversize and insert into the gap ensuring a tight friction fit. Ensure correct depth is achieved.
5. Fill the gap or joint with Protecta® FR Acrylic to the required depth.
6. Apply the sealant generously to prevent air bubbles. Finish the bead with a moist spatula, pallet knife or brush.
7. Protecta® FR Acrylic can be over-painted with most emulsion or alkyd (gloss) paints.

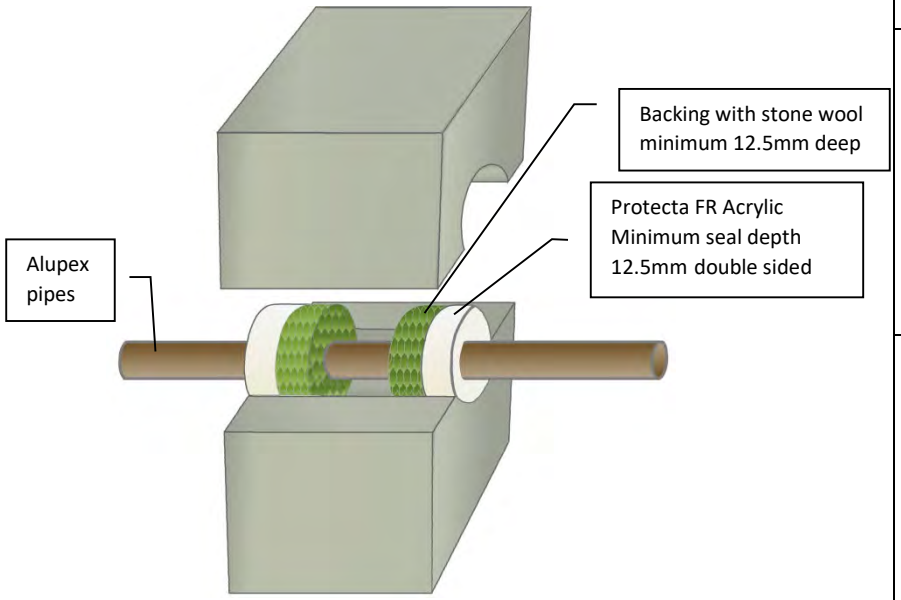

ETA 13/0879 & 13/0880

As a part of our policy of on-going product development and testing, we reserve the right to modify, alter or change product specifications without giving notice. All information contained in this document is given in good faith and is provided for guidance only. Any drawings provided are for illustrative purposes only. As Polyseam has no control over the methods or competence of installation and of prevailing site conditions, no warranties, expressed or implied, is intended to be given as to the actual performance of the product mentioned or referred to herein and no liability whatsoever will be accepted for any loss, damage or injury arising from the use of the information given.

For all technical details on the products specified please refer to the technical data sheets that can be found on www.protecta.eu

Signed and approved:

Client:

Job Title:

Products	Protecta FR Acrylic Stone wool
Application	Fire stopping of alupex pipes in rigid walls
Construction	Minimum wall thickness of 100 mm and comprise concrete, aerated concrete or masonry, with a density of ≥ 650 kg/m³

Fire & Sound classification

Alupex pipes ≤ Ø20mm without pipe insulation in maximum aperture 300x300mm

EI 120 C/C & E 120 C/C

Sound reduction (seal only)

62dB

Protecta®

Polyseam Ltd, 15 St Andrews Road, Huddersfield, West Yorkshire, HD1 6SB
Tel: +44 (0) 148 4421036
Email: post.uk@polyseam.com

Sheet size: **A4**	Drawn date & no: 8/4/18
Scale: **NTS**	Drawn by: K.B

Installation Instructions

1. Before installing Protecta® FR Acrylic ensure that the surface of all service penetrations and surrounding construction is free from all loose contaminants, dust and grease.
2. Where Protecta® FR Acrylic is to be installed against surfaces that cannot tolerate direct contact; appropriate surface preparation should be made (contact Polyseam for guidance in these cases). For paints sensitive to sealing compounds, priming with a PVA primer is recommended.
3. As Protecta® FR Acrylic is water based, in cases where corrosion protection is a problem; some metals may require a barrier between the sealant and the metal surface prior to this installation.
4. When installing any backing material, cut this slightly oversize and insert into the gap ensuring a tight friction fit. Ensure correct depth is achieved.
5. Fill the gap or joint with Protecta® FR Acrylic to the required depth.
6. Apply the sealant generously to prevent air bubbles. Finish the bead with a moist spatula, pallet knife or brush.
7. Protecta® FR Acrylic can be over-painted with most emulsion or alkyd (gloss) paints.

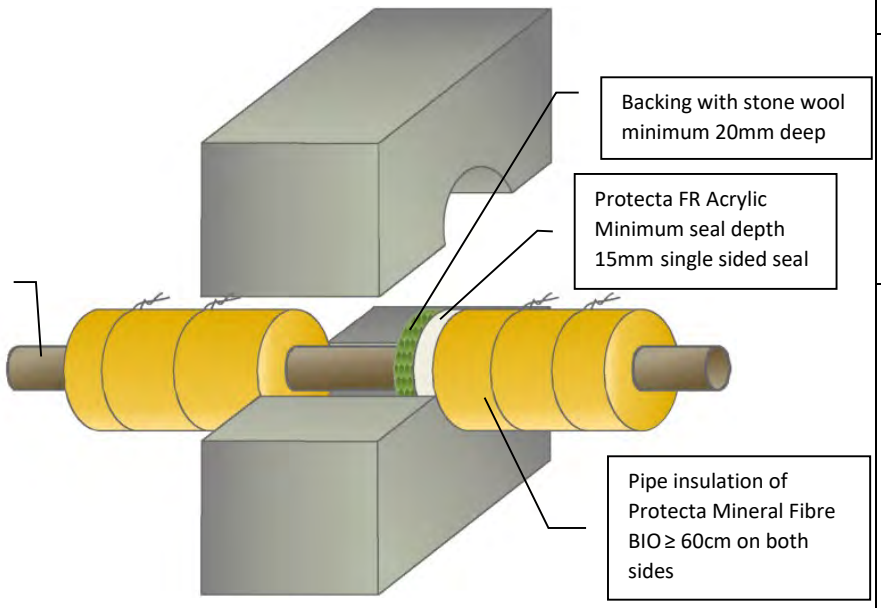

ETA 13/0879 & 13/0880

Client:

Job Title:

Products	Protecta FR Acrylic Stone wool
Application	Fire stopping of alupex pipes in rigid walls
Construction	Minimum wall thickness of 150 mm and comprise concrete, aerated concrete or masonry, with a density of ≥ 650 kg/m³

Fire & Sound classification

Alupex pipes ≤ Ø75mm with ≥ 25mm thick pipe insulation in maximum aperture 300x300mm

EI 60 C/U & E 120 C/U

Alupex pipes ≤ Ø75mm with ≥ 25mm thick pipe insulation in maximum aperture pipe Ø + 60mm

EI 120 C/U & E 120 C/U

Sound reduction (seal only)

62dB

Polyseam Ltd, 15 St Andrews Road, Huddersfield, West Yorkshire, HD1 6SB
Tel: +44 (0) 148 4421036
Email: post.uk@polyseam.com

For all technical details on the products specified please refer to the technical data sheets that can be found on www.protecta.eu

Signed and approved:

Sheet size: **A4**	Drawn date & no: 23/4/15
Scale: **NTS**	Drawn by: K.B

Installation Instructions

1. Before installing Protecta® FR Acrylic ensure that the surface of all service penetrations and surrounding construction is free from all loose contaminants, dust and grease.
2. Where Protecta® FR Acrylic is to be installed against surfaces that cannot tolerate direct contact; appropriate surface preparation should be made (contact Polyseam for guidance in these cases). For paints sensitive to sealing compounds, priming with a PVA primer is recommended.
3. As Protecta® FR Acrylic is water based, in cases where corrosion protection is a problem; some metals may require a barrier between the sealant and the metal surface prior to this installation.
4. When installing any backing material, cut this slightly oversize and insert into the gap ensuring a tight friction fit. Ensure correct depth is achieved.
5. Fill the gap or joint with Protecta® FR Acrylic to the required depth.
6. Apply the sealant generously to prevent air bubbles. Finish the bead with a moist spatula, pallet knife or brush.
7. Protecta® FR Acrylic can be over-painted with most emulsion or alkyd (gloss) paints.

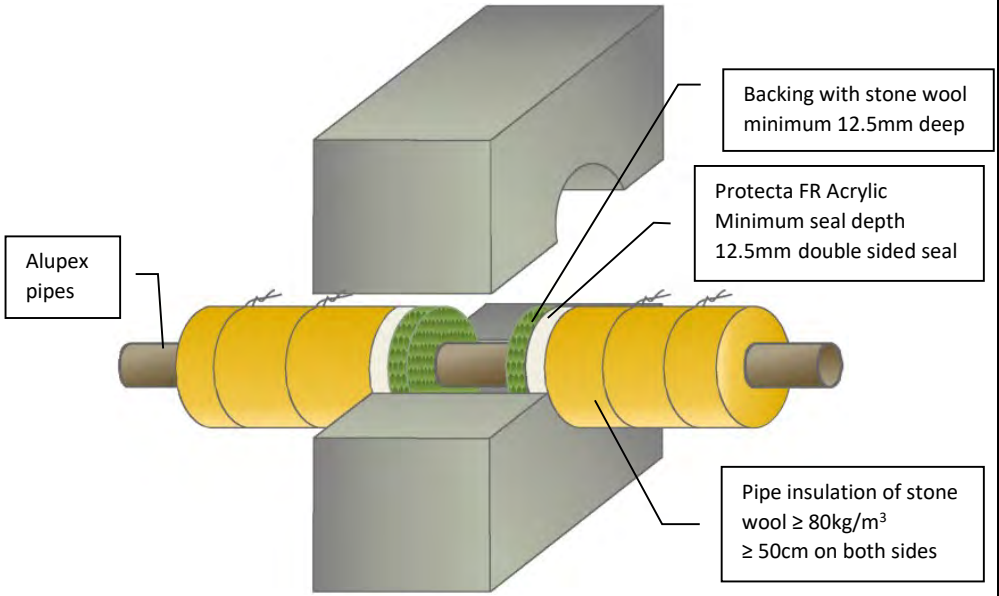

ETA 13/0879 & 13/0880

Client:

Job Title:

Products	Protecta FR Acrylic Stone wool
Application	Fire stopping of alupex pipes in rigid walls
Construction	Minimum wall thickness of 100 mm and comprise concrete, aerated concrete or masonry, with a density of ≥ 650 kg/m³

Fire & Sound classification

Alupex pipes ≤ Ø75mm with ≥ 20mm thick pipe insulation in maximum aperture 300x300mm

EI 120 C/C & E 120 C/C

Sound reduction (seal only)

62dB

Polyseam Ltd, 15 St Andrews Road, Huddersfield, West Yorkshire, HD1 6SB
Tel: +44 (0) 148 4421036
Email: post.uk@polyseam.com

For all technical details on the products specified please refer to the technical data sheets that can be found on www.protecta.eu

Signed and approved:

Sheet size: **A4**	Drawn date & no: 23/4/15
Scale: **NTS**	Drawn by: K.B

Installation Instructions

1. Before installing Protecta® FR Acrylic ensure that the surface of all service penetrations and surrounding construction is free from all loose contaminants, dust and grease.
2. Where Protecta® FR Acrylic is to be installed against surfaces that cannot tolerate direct contact; appropriate surface preparation should be made (contact Polyseam for guidance in these cases). For paints sensitive to sealing compounds, priming with a PVA primer is recommended.
3. When installing any backing material, cut this slightly oversize and insert into the gap ensuring a tight friction fit. Ensure correct depth is achieved.
4. Fill the gap or joint with Protecta® FR Acrylic to the required depth.
5. Apply the sealant generously to prevent air bubbles. Finish the bead with a moist spatula, pallet knife or brush.
6. Protecta® FR Acrylic can be over-painted with most emulsion or alkyd (gloss) paints.

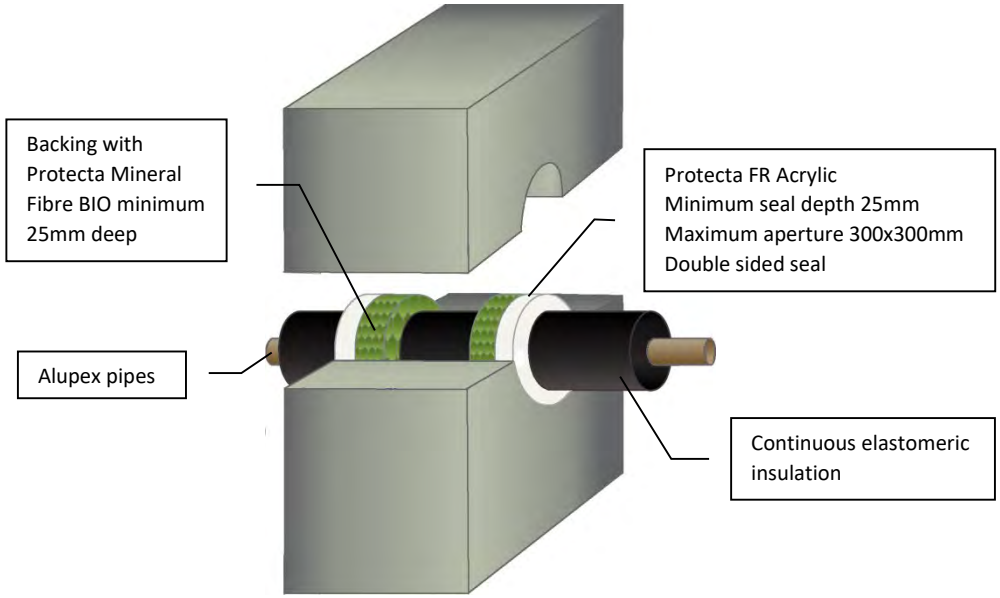

Client:

Job Title:

Products	Protecta FR Acrylic Protecta Mineral Fibre BIO
Application	Fire stopping of alupex pipes in rigid walls
Construction	Minimum wall thickness of 100 mm and comprise concrete, aerated concrete or masonry, with a density of ≥ 650 kg/m³

Fire & Sound classification

Alupex pipes ≤ Ø16mm with 9mm thick pipe insulation	EI 120 C/C & E 120 C/C
Alupex pipes ≤ Ø75mm with 9 – 25mm thick pipe insulation	EI 60 C/C & E 60 C/C
Sound reduction (seal only)	62dB

ETA 13/0879 & 13/0880

Polyseam Ltd, 15 St Andrews Road, Huddersfield, West Yorkshire, HD1 6SB
Tel: +44 (0) 148 4421036
Email: post.uk@polyseam.com

For all technical details on the products specified please refer to the technical data sheets that can be found on www.protecta.eu

Signed and approved:

Sheet size: **A4**	Drawn date & no: 23/4/15
Scale: **NTS**	Drawn by: K.B

Installation Instructions

1. Before installing Protecta® FR Acrylic ensure that the surface of all service penetrations and surrounding construction is free from all loose contaminants, dust and grease.
2. Where Protecta® FR Acrylic is to be installed against surfaces that cannot tolerate direct contact; appropriate surface preparation should be made (contact Polyseam for guidance in these cases). For paints sensitive to sealing compounds, priming with a PVA primer is recommended.
3. When installing any backing material, cut this slightly oversize and insert into the gap ensuring a tight friction fit. Ensure correct depth is achieved.
4. Fill the gap or joint with Protecta® FR Acrylic to the required depth.
5. Apply the sealant generously to prevent air bubbles. Finish the bead with a moist spatula, pallet knife or brush.
6. Protecta® FR Acrylic can be over-painted with most emulsion or alkyd (gloss) paints.

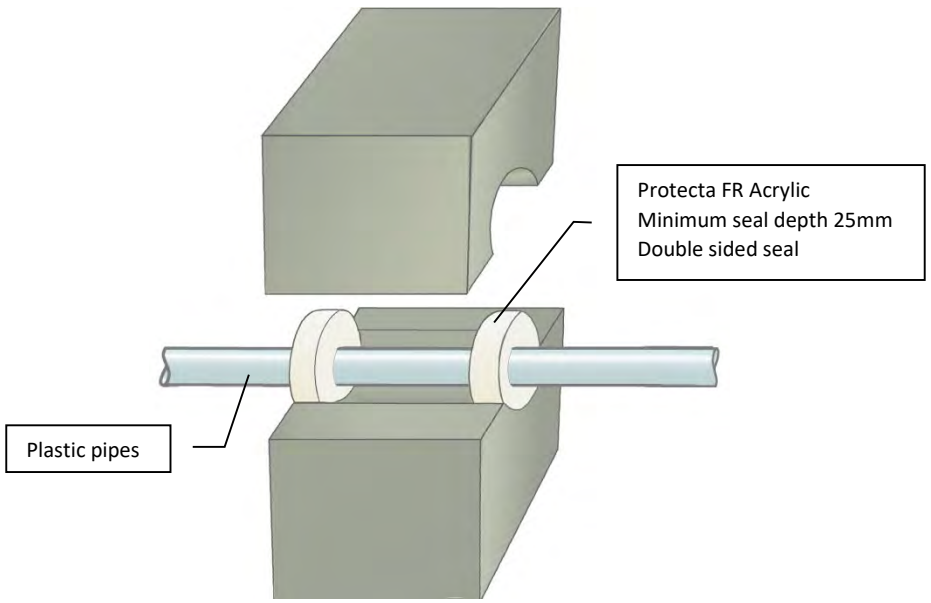

ETA 13/0879 & 13/0880

As a part of our policy of on-going product development and testing, we reserve the right to modify, alter or change product specifications without giving notice. All information contained in this document is given in good faith and is provided for guidance only. Any drawings provided are for illustrative purposes only. As Polyseam has no control over the methods or competence of installation and of prevailing site conditions, no warranties, expressed or implied, is intended to be given as to the actual performance of the product mentioned or referred to herein and no liability whatsoever will be accepted for any loss, damage or injury arising from the use of the information given.

For all technical details on the products specified please refer to the technical data sheets that can be found on www.protecta.eu

Signed and approved:

Client:

Job Title:

Products	Protecta FR Acrylic
Application	Fire stopping of plastic pipes in rigid walls
Construction	Minimum wall thickness of 100 mm and comprise concrete, aerated concrete or masonry, with a density of ≥ 650 kg/m³

Fire & Sound classification

PVC-U & PVC-C pipes ≤ Ø32mm with wall thickness 1.0-2.4mm in maximum aperture pipe Ø + 20mm **EI 120 U/C & E 120 U/C**

PVC-U & PVC-C pipes ≤ Ø32mm with wall thickness 1.0-2.4mm in maximum aperture pipe Ø + 60mm **EI 90 U/C & E 120 U/C**

PE, ABS & SAN+PVC pipe Ø20mm with wall thickness 2.0mm in maximum aperture pipe Ø + 60mm **EI 120 U/C & E 120 U/C**

PP pipe Ø20mm with wall thickness 2.2mm in maximum aperture pipe Ø + 60mm **EI 120 U/C & E 120 U/C**

PP pipes ≤ Ø32mm with wall thickness 2.0-4.4mm in maximum aperture pipe Ø + 60mm **EI 60 U/C & E 60 U/C**

Sound reduction (seal only) **62dB**

Polyseam Ltd, 15 St Andrews Road, Huddersfield, West Yorkshire, HD1 6SB
Tel: +44 (0) 148 4421036
Email: post.uk@polyseam.com

Sheet size: **A4**	Drawn date & no: 23/4/15
Scale: **NTS**	Drawn by: K.B

Installation Instructions

1. Before installing Protecta® FR Acrylic ensure that the surface of all service penetrations and surrounding construction is free from all loose contaminants, dust and grease.
2. Where Protecta® FR Acrylic is to be installed against surfaces that cannot tolerate direct contact; appropriate surface preparation should be made (contact Polyseam for guidance in these cases). For paints sensitive to sealing compounds, priming with a PVA primer is recommended.
3. When installing any backing material, cut this slightly oversize and insert into the gap ensuring a tight friction fit. Ensure correct depth is achieved.
4. Fill the gap or joint with Protecta® FR Acrylic to the required depth.
5. Apply the sealant generously to prevent air bubbles. Finish the bead with a moist spatula, pallet knife or brush.
6. Protecta® FR Acrylic can be over-painted with most emulsion or alkyd (gloss) paints.

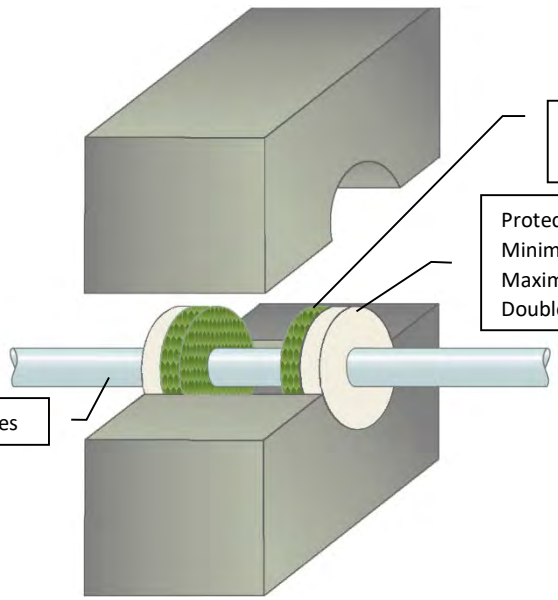

ETA 13/0879 & 13/0880

As a part of our policy of on-going product development and testing, we reserve the right to modify, alter or change product specifications without giving notice. All information contained in this document is given in good faith and is provided for guidance only. Any drawings provided are for illustrative purposes only. As Polyseam has no control over the methods or competence of installation and of prevailing site conditions, no warranties, expressed or implied, is intended to be given as to the actual performance of the product mentioned or referred to herein and no liability whatsoever will be accepted for any loss, damage or injury arising from the use of the information given.

For all technical details on the products specified please refer to the technical data sheets that can be found on www.protecta.eu

Signed and approved:

Client:

Job Title:

Products	Protecta FR Acrylic Stonewool
Application	Fire stopping of plastic pipes in rigid walls
Construction	Minimum wall thickness of 150 mm and comprise concrete, aerated concrete or masonry, with a density of ≥ 650 kg/m³

Fire & Sound classification

PVC-U & PVC-C pipes Ø32mm with wall thickness 1.6mm
EI 240 U/C & E 240 U/C

PE, ABS & SAN+PVC pipe ≤ Ø32mm with wall thickness 2.0mm
EI 240 C/U & E 240 C/U

PP pipes Ø32mm with wall thickness 2.0-4.4mm
EI 180 C/U & E 180 C/U

Sound reduction (seal only) 62dB

Polyseam Ltd, 15 St Andrews Road, Huddersfield, West Yorkshire, HD1 6SB
Tel: +44 (0) 148 4421036
Email: post.uk@polyseam.com

Sheet size: **A4**	Drawn date & no: 9/4/18
Scale: **NTS**	Drawn by: K.B

Installation Instructions

1. Before installing Protecta® FR Acrylic ensure that the surface of all service penetrations and surrounding construction is free from all loose contaminants, dust and grease.
2. Where Protecta® FR Acrylic is to be installed against surfaces that cannot tolerate direct contact; appropriate surface preparation should be made (contact Polyseam for guidance in these cases). For paints sensitive to sealing compounds, priming with a PVA primer is recommended.
3. When installing any backing material, cut this slightly oversize and insert into the gap ensuring a tight friction fit. Ensure correct depth is achieved.
4. Fill the gap or joint with Protecta® FR Acrylic to the required depth.
5. Apply the sealant generously to prevent air bubbles. Finish the bead with a moist spatula, pallet knife or brush.
6. Protecta® FR Acrylic can be over-painted with most emulsion or alkyd (gloss) paints.

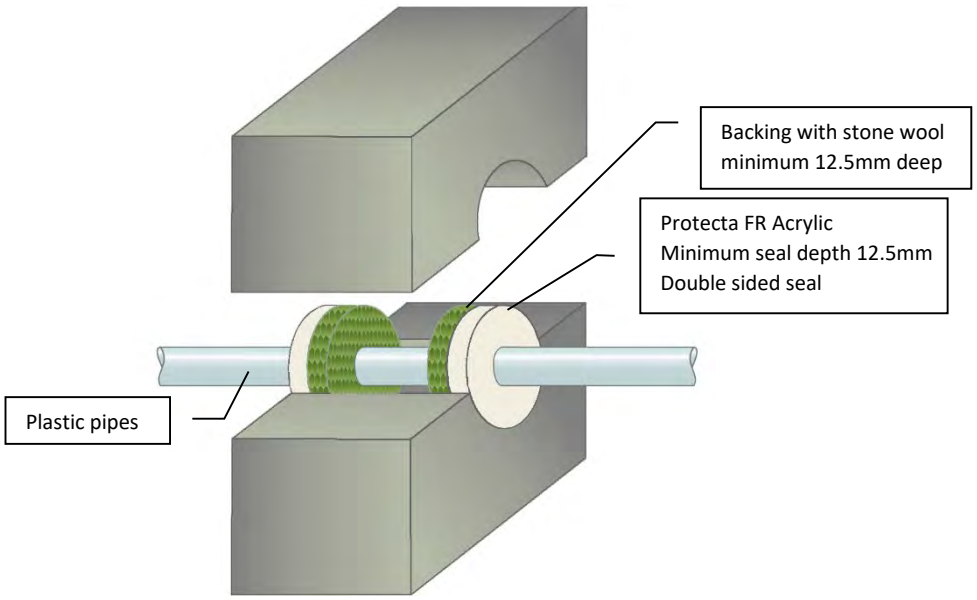

ETA 13/0879 & 13/0880

As a part of our policy of on-going product development and testing, we reserve the right to modify, alter or change product specifications without giving notice. All information contained in this document is given in good faith and is provided for guidance only. Any drawings provided are for illustrative purposes only. As Polyseam has no control over the methods or competence of installation and of prevailing site conditions, no warranties, expressed or implied, is intended to be given as to the actual performance of the product mentioned or referred to herein and no liability whatsoever will be accepted for any loss, damage or injury arising from the use of the information given.

For all technical details on the products specified please refer to the technical data sheets that can be found on www.protecta.eu

Signed and approved:

Client:

Job Title:

Products	Protecta FR Acrylic Stonewool
Application	Fire stopping of PEX plastic pipes in rigid walls
Construction	Minimum wall thickness of 100 mm and comprise concrete, aerated concrete or masonry, with a density of ≥ 650 kg/m³

Fire & Sound classification

PEX pipe-in-pipe ≤ Ø25mm in maximum aperture Ø85mm

EI 120 C/C & E 120 C/C

Sound reduction (seal only)

62dB

Polyseam Ltd, 15 St Andrews Road, Huddersfield, West Yorkshire, HD1 6SB
Tel: +44 (0) 148 4421036
Email: post.uk@polyseam.com

Sheet size: **A4**	Drawn date & no: 9/4/18
Scale: **NTS**	Drawn by: K.B

Installation Instructions

1. Before installing Protecta® FR Graphite ensure that the surface of all service penetrations and surrounding construction is free from all loose contaminants, dust and grease.
2. When installing any backing material, cut this slightly oversize and insert into the gap ensuring a tight friction fit. Ensure correct depth is achieved.
3. Fill the gap or joint with Protecta® FR Graphite to the required depth.
4. Apply the sealant generously avoiding air bubbles. Finish the bead with a moist spatula or pallet knife. Avoid excessive tooling/smoothing as this may make the seal surface wet and soft.
5. Protecta® FR Graphite can be over-painted with most emulsion or alkyd (gloss) paints.

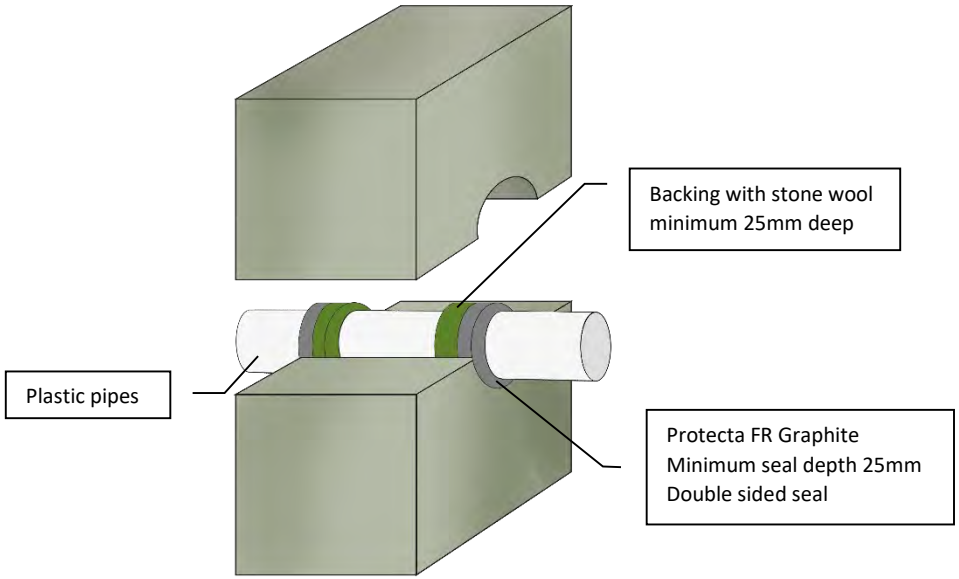

ETA 18/0626

As a part of our policy of on-going product development and testing, we reserve the right to modify, alter or change product specifications without giving notice. All information contained in this document is given in good faith and is provided for guidance only. Any drawings provided are for illustrative purposes only. As Polyseam has no control over the methods or competence of installation and of prevailing site conditions, no warranties, expressed or implied, is intended to be given as to the actual performance of the product mentioned or referred to herein and no liability whatsoever will be accepted for any loss, damage or injury arising from the use of the information given.

For all technical details on the products specified please refer to the technical data sheets that can be found on www.protecta.eu

Signed and approved:

Client:

Job Title:

Products	Protecta FR Graphite Stone wool
Application	Fire stopping of plastic pipes in rigid walls
Construction	Minimum wall thickness of 100 mm and comprise concrete, aerated concrete or masonry, with a density of ≥ 650 kg/m³

Fire & Sound classification

PVC-U and PVC-C pipe ≤ 110 mm diameter with wall thickness 1.9-6.6mm in seal widths between 10 and 30mm EI 120 U/C

PE, ABS and SAN+PVC pipe ≤ 40 mm diameter with wall thickness 2.4-3.7mm in seal widths between 10 and 30mm EI 120 U/C

PE, ABS and SAN+PVC pipe ≤ 110 mm diameter with wall thickness 2.4-4.2mm in seal widths between 10 and 30mm EI 60 U/C

PE, ABS and SAN+PVC pipe ≤ 110 mm diameter with wall thickness 4.3-10.0mm in seal widths between 10 and 30mm EI 90 U/C & E 120 U/C

Sound reduction (seal only) Rw 53dB

Polyseam Ltd, 15 St Andrews Road, Huddersfield, West Yorkshire, HD1 6SB
Tel: +44 (0) 148 4421036
Email: post.uk@polyseam.com

Sheet size: **A4**	Drawn date & no: 11/11/18
Scale: **NTS**	Drawn by: K.B

Installation Instructions

1. Before installing Protecta® FR Graphite ensure that the surface of all service penetrations and surrounding construction is free from all loose contaminants, dust and grease.
2. When installing any backing material, cut this slightly oversize and insert into the gap ensuring a tight friction fit. Ensure correct depth is achieved.
3. Fill the gap or joint with Protecta® FR Graphite to the required depth.
4. Apply the sealant generously avoiding air bubbles. Finish the bead with a moist spatula or pallet knife. Avoid excessive tooling/smoothing as this may make the seal surface wet and soft.
5. Protecta® FR Graphite can be over-painted with most emulsion or alkyd (gloss) paints.

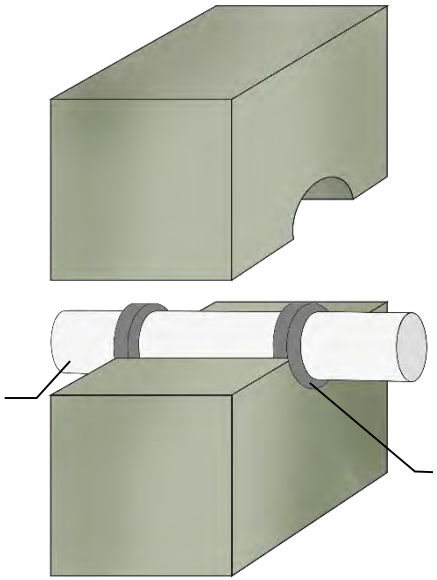

ETA 18/0626

As a part of our policy of on-going product development and testing, we reserve the right to modify, alter or change product specifications without giving notice. All information contained in this document is given in good faith and is provided for guidance only. Any drawings provided are for illustrative purposes only. As Polyseam has no control over the methods or competence of installation and of prevailing site conditions, no warranties, expressed or implied, is intended to be given as to the actual performance of the product mentioned or referred to herein and no liability whatsoever will be accepted for any loss, damage or injury arising from the use of the information given.

For all technical details on the products specified please refer to the technical data sheets that can be found on www.protecta.eu

Signed and approved:

Client:

Job Title:

Products	Protecta FR Graphite
Application	Fire stopping of plastic pipes in rigid walls
Construction	Minimum wall thickness of 100 mm and comprise concrete, aerated concrete or masonry, with a density of ≥ 650 kg/m³

Fire & Sound classification

PVC-U and PVC-C pipe ≤ 160 mm diameter with wall thickness 3.2-9.5mm in seal widths between 10 and 30mm EI 30 U/C

PVC-U and PVC-C pipe ≤ 160 mm diameter with wall thickness 9.5mm in seal widths between 10 and 30mm EI 90 U/C

PP pipe ≤ 110 mm diameter with wall thickness 1.8-6.3mm in seal widths between 10 and 30mm EI 60 U/C

Sound reduction (seal only) Rw 53dB

Polyseam Ltd, 15 St Andrews Road, Huddersfield, West Yorkshire, HD1 6SB
Tel: +44 (0) 148 4421036
Email: post.uk@polyseam.com

Sheet size: **A4**	Drawn date & no: 11/11/18
Scale: **NTS**	Drawn by: K.B

Installation Instructions

1. Before installing Protecta® FR Graphite ensure that the surface of all service penetrations and surrounding construction is free from all loose contaminants, dust and grease.
2. When installing any backing material, cut this slightly oversize and insert into the gap ensuring a tight friction fit. Ensure correct depth is achieved.
3. Fill the gap or joint with Protecta® FR Graphite to the required depth.
4. Apply the sealant generously avoiding air bubbles. Finish the bead with a moist spatula or pallet knife. Avoid excessive tooling/smoothing as this may make the seal surface wet and soft.
5. Protecta® FR Graphite can be over-painted with most emulsion or alkyd (gloss) paints.

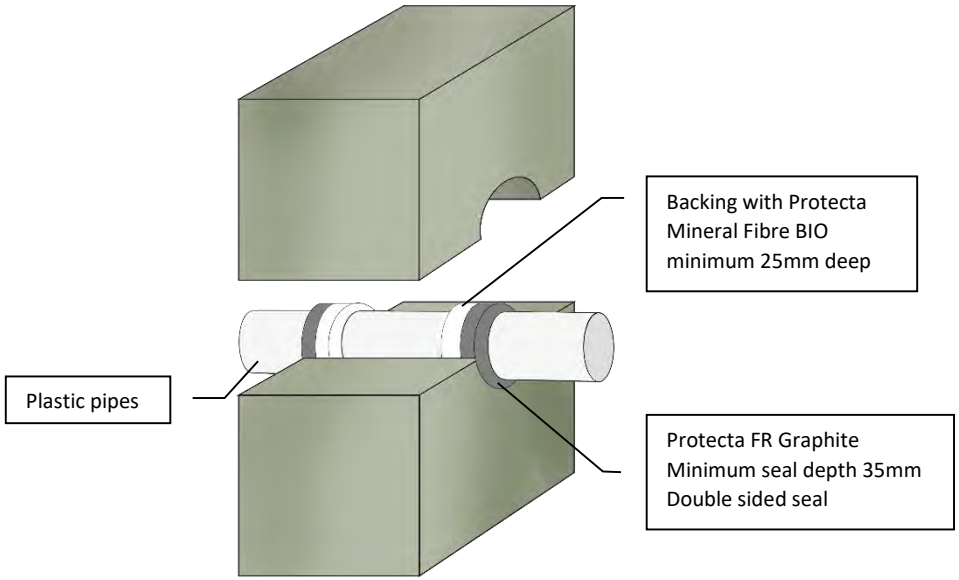

ETA 18/0626

As a part of our policy of on-going product development and testing, we reserve the right to modify, alter or change product specifications without giving notice. All information contained in this document is given in good faith and is provided for guidance only. Any drawings provided are for illustrative purposes only. As Polyseam has no control over the methods or competence of installation and of prevailing site conditions, no warranties, expressed or implied, is intended to be given as to the actual performance of the product mentioned or referred to herein and no liability whatsoever will be accepted for any loss, damage or injury arising from the use of the information given.

For all technical details on the products specified please refer to the technical data sheets that can be found on www.protecta.eu

Signed and approved:

Client:

Job Title:

Products	Protecta FR Graphite
Application	Fire stopping of plastic pipes in rigid walls
Construction	Minimum wall thickness of 150 mm and comprise concrete, aerated concrete or masonry, with a density of ≥ 650 kg/m³

Fire & Sound classification

PVC-U and PVC-C pipe ≤ 160 mm diameter with wall thickness 4.0-9.5mm in seal widths between 10 and 30mm

EI 90 U/C

PVC-U and PVC-C pipe ≤ 160 mm diameter with wall thickness 9.5mm in seal widths between 10 and 30mm

EI 180 U/C & E 240 U/C

Sound reduction (seal only)

Rw 53dB

Polyseam Ltd, 15 St Andrews Road, Huddersfield, West Yorkshire, HD1 6SB
Tel: +44 (0) 148 4421036
Email: post.uk@polyseam.com

Sheet size: **A4**	Drawn date & no: 11/11/18
Scale: **NTS**	Drawn by: K.B

Installation Instructions

1. For sealing plastic pipes, a pipe collar is installed on both sides of the wall.
2. Before fitting the pipe collar ensure that the gaps between the pipe and the separating element are sealed.
3. Place a pipe collar around the service penetration (pipe) and ensure that the fixing lugs are positioned tightly to the surface of the wall so that the fixings can be inserted fully.
4. Where the surface is uneven, apply a sealing bead of Protecta® FR Acrylic between the wall/floor and the pipe collar.
5. Attach the pipe collar with steel screws or fixings that are suitable for the substrate that the pipe collar will be fitted to. Use ≥ Ø4 x 50mm long masonry screws or expansion bolts.
6. On site where the penetration size is greater than the pipe diameter and/or the pipe is in an angle an oversized collar can be used. Protecta® FR Collars are tested 'oversize', i.e. the internal diameter of the collar can be larger than the pipe.

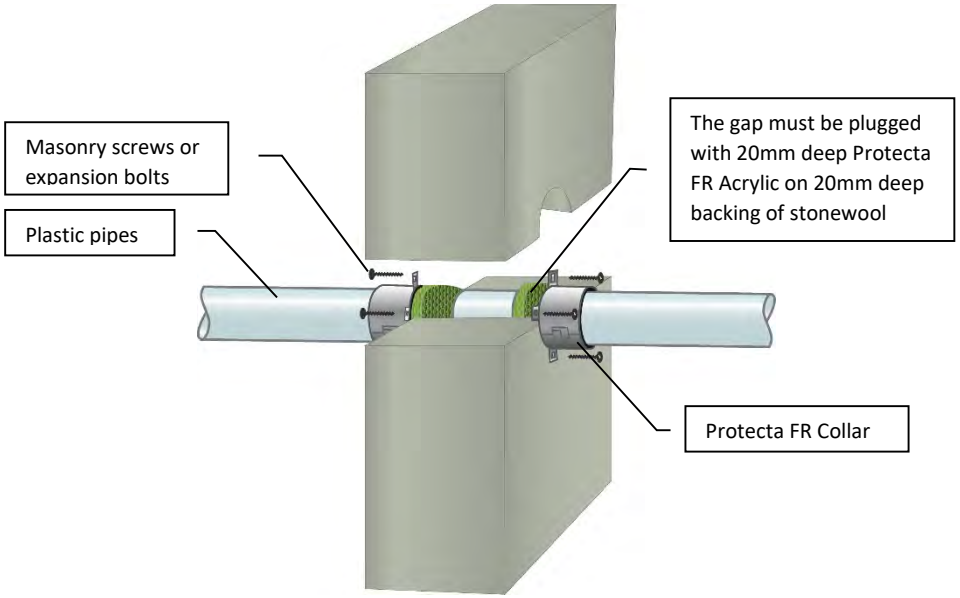

Services	Minimum Collar Height	Classification
≤ Ø110mm PVC-U & PVC-C	30mm	EI 60 C/C, EI 60 U/C
≤ Ø110mm PVC-U & PVC-C	50mm	EI 180 C/C, EI 180 U/C, EI 180 C/U, EI 180 U/U
≤ Ø160mm PVC-U & PVC-C	60mm	EI 240 C/C, EI 240 U/C, EI 240 C/U, EI 240 U/U
Ø315x9.2mm PVC-U & PVC-C	75mm	EI 120 C/C
≤ Ø50mm PE, ABS & SAN+PVC	30mm	EI 60 C/C, EI 60 U/C, EI 45 C/U, EI 45 U/U
≤ Ø50mm PE, ABS & SAN+PVC	50mm	EI 240 C/C, EI 240 U/C, EI 240 C/U, EI 240 U/U
≤ Ø110mm PE, ABS & SAN+PVC	30mm	EI 60 C/C, EI 60 U/C
≤ Ø110mm PE, ABS & SAN+PVC	50mm	EI 180 C/C, EI 180 U/C, EI 180 C/U, EI 180 U/U
≤ Ø160mm PE, ABS & SAN+PVC	60mm	EI 180 C/C, EI 180 U/C, EI 180 C/U, EI 180 U/U
Ø200x18.2mm PE, ABS & SAN+PVC	75mm	EI 60 C/C
Ø250x22.7mm PE, ABS & SAN+PVC	75mm	EI 90 C/C
≤ Ø50mm PP	30mm	EI 240 C/C, EI 240 U/C, EI 240 C/U, EI 240 U/U
≤ Ø110mm PP	30mm	EI 60 C/C, EI 60 U/C
≤ Ø110mm PP	50mm	EI 240 C/C, EI 240 U/C, EI 60 C/U, EI 60 U/U
≤ Ø125mm PP	60mm	EI 180 C/C, EI 180 U/C, EI 60 C/U, EI 60 U/U
≤ Ø160mm PP	60mm	EI 180 C/C, EI 180 U/C, EI 180 C/U, EI 180 U/U

ETA 14/0249

Client:

Job Title:

Products Protecta FR Collar
Protecta FR Acrylic

Application Fire stopping of plastic pipes in rigid walls with gap widths of minimum 8mm

Construction Minimum wall thickness of 150 mm and comprise concrete, aerated concrete or masonry, with a density of ≥ 650 kg/m³

Fire & Sound classification

Fire classifications in table on the left.

Sound reduction (seal only) 58dB

Polyseam Ltd, 15 St Andrews Road, Huddersfield, West Yorkshire, HD1 6SB
Tel: +44 (0) 148 4421036
Email: post.uk@polyseam.com

For all technical details on the products specified please refer to the technical data sheets that can be found on www.protecta.eu

Signed and approved:

Sheet size:	Drawn date & no:
A4	24/5/18
Scale:	Drawn by:
NTS	K.B

Installation Instructions

1. Before installing Protecta® FR Graphite ensure that the surface of all service penetrations and surrounding construction is free from all loose contaminants, dust and grease.
2. When installing any backing material, cut this slightly oversize and insert into the gap ensuring a tight friction fit. Ensure correct depth is achieved.
3. Fill the gap or joint with Protecta® FR Graphite to the required depth.
4. Apply the sealant generously avoiding air bubbles. Finish the bead with a moist spatula or pallet knife. Avoid excessive tooling/smoothing as this may make the seal surface wet and soft.
5. Protecta® FR Graphite can be over-painted with most emulsion or alkyd (gloss) paints.

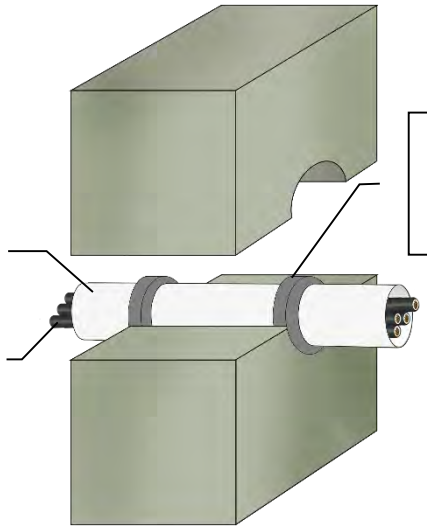

ETA 18/0626

As a part of our policy of on-going product development and testing, we reserve the right to modify, alter or change product specifications without giving notice. All information contained in this document is given in good faith and is provided for guidance only. Any drawings provided are for illustrative purposes only. As Polyseam has no control over the methods or competence of installation and of prevailing site conditions, no warranties, expressed or implied, is intended to be given as to the actual performance of the product mentioned or referred to herein and no liability whatsoever will be accepted for any loss, damage or injury arising from the use of the information given.

For all technical details on the products specified please refer to the technical data sheets that can be found on www.protecta.eu

Signed and approved:

Client:

Job Title:

Products	Protecta FR Graphite
Application	Fire stopping of conduits in rigid walls
Construction	Minimum wall thickness of 100 mm and comprise concrete, aerated concrete or masonry, with a density of ≥ 650 kg/m³

Fire & Sound classification

PE, ABS & SAN+PVC conduits/pipes ≤ Ø110mm with wall thickness 2.4 - 10.0mm	EI 60 U/C
PP conduits/pipes ≤ Ø110mm with wall thickness 2.7 - 6.6mm	EI 90 U/C
PVC-U & PVC-C conduits/pipes ≤ Ø110mm with wall thickness 1.9 - 6.6mm	EI 90 U/C
Sound reduction (seal only)	Rw 53dB

Polyseam Ltd, 15 St Andrews Road, Huddersfield, West Yorkshire, HD1 6SB
Tel: +44 (0) 148 4421036
Email: post.uk@polyseam.com

Sheet size: **A4**	Drawn date & no: 11/11/18
Scale: **NTS**	Drawn by: K.B

Installation Instructions

1. Before installing Protecta® FR Acrylic ensure that the surface of all service penetrations and surrounding construction is free from all loose contaminants, dust and grease.
2. Where Protecta® FR Acrylic is to be installed against surfaces that cannot tolerate direct contact; appropriate surface preparation should be made (contact Polyseam for guidance in these cases). For paints sensitive to sealing compounds, priming with a PVA primer is recommended.
3. When installing the sealant in gypsum boards, the exposed edges of the board can be wetted with water, or Protecta® FR Acrylic diluted with water to prime the surfaces helping adhesion and preventing excessive joint shrinkage.
4. When installing any backing material, cut this slightly oversize and insert into the gap ensuring a tight friction fit. Ensure correct depth is achieved.
5. Fill the gap or joint with Protecta® FR Acrylic to the required depth.
6. Apply the sealant generously to prevent air bubbles. Finish the bead with a moist spatula, pallet knife or brush.
7. Protecta® FR Acrylic can be over-painted with most emulsion or alkyd (gloss) paints.

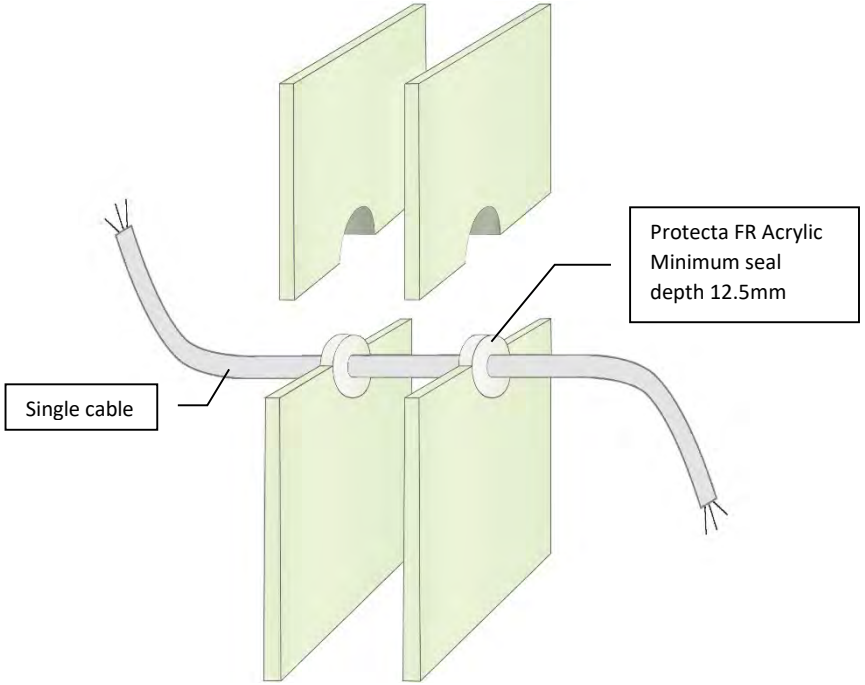

ETA 13/0879 & 13/0880

As a part of our policy of on-going product development and testing, we reserve the right to modify, alter or change product specifications without giving notice. All information contained in this document is given in good faith and is provided for guidance only. Any drawings provided are for illustrative purposes only. As Polyseam has no control over the methods or competence of installation and of prevailing site conditions, no warranties, expressed or implied, is intended to be given as to the actual performance of the product mentioned or referred to herein and no liability whatsoever will be accepted for any loss, damage or injury arising from the use of the information given.

For all technical details on the products specified please refer to the technical data sheets that can be found on www.protecta.eu

Signed and approved:

Client:

Job Title:

Products	Protecta FR Acrylic
Application	Fire stopping of cables in flexible walls
Construction	Minimum wall thickness of 75 mm and comprise steel studs or timber studs* lined on both faces with minimum 1 layer of 12.5 mm thick boards

Fire & Sound classification

Cables ≤ Ø21mm in double sided seal in maximum aperture 150x150mm

EI 45 & E 60

Sound reduction (seal only)

62 dB

Polyseam Ltd, 15 St Andrews Road, Huddersfield, West Yorkshire, HD1 6SB
Tel: +44 (0) 148 4421036
Email: post.uk@polyseam.com

Sheet size: **A4**	Drawn date & no: 8/4/18
Scale: **NTS**	Drawn by: K.B

Installation Instructions

1. Before installing Protecta® FR Acrylic ensure that the surface of all service penetrations and surrounding construction is free from all loose contaminants, dust and grease.
2. Where Protecta® FR Acrylic is to be installed against surfaces that cannot tolerate direct contact; appropriate surface preparation should be made (contact Polyseam for guidance in these cases). For paints sensitive to sealing compounds, priming with a PVA primer is recommended.
3. When installing the sealant in gypsum boards, the exposed edges of the board can be wetted with water, or Protecta® FR Acrylic diluted with water to prime the surfaces helping adhesion and preventing excessive joint shrinkage.
4. When installing any backing material, cut this slightly oversize and insert into the gap ensuring a tight friction fit. Ensure correct depth is achieved.
5. Fill the gap or joint with Protecta® FR Acrylic to the required depth.
6. Apply the sealant generously to prevent air bubbles. Finish the bead with a moist spatula, pallet knife or brush.
7. Protecta® FR Acrylic can be over-painted with most emulsion or alkyd (gloss) paints.

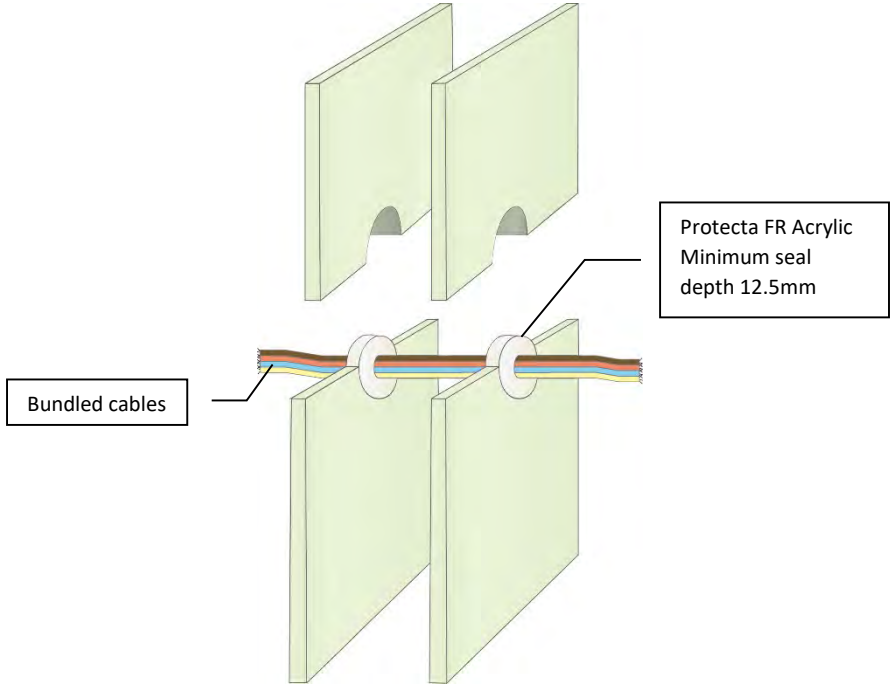

ETA 13/0879 & 13/0880

Client:

Job Title:

Products	Protecta FR Acrylic
Application	Fire stopping of cables in flexible walls
Construction	Minimum wall thickness of 75 mm and comprise steel studs or timber studs* lined on both faces with minimum 1 layer of 12.5 mm thick boards

Fire & Sound classification

Cables ≤ Ø21mm in a bundle ≤ Ø 100mm in double sided seal in maximum aperture 150x150mm

EI 30 & E 45

Sound reduction (seal only)

62 dB

Polyseam Ltd, 15 St Andrews Road, Huddersfield, West Yorkshire, HD1 6SB
Tel: +44 (0) 148 4421036
Email: post.uk@polyseam.com

For all technical details on the products specified please refer to the technical data sheets that can be found on www.protecta.eu

Signed and approved:

Sheet size: **A4**	Drawn date & no: 8/4/18
Scale: **NTS**	Drawn by: K.B

Installation Instructions

1. Before installing Protecta® FR Acrylic ensure that the surface of all service penetrations and surrounding construction is free from all loose contaminants, dust and grease.
2. Where Protecta® FR Acrylic is to be installed against surfaces that cannot tolerate direct contact; appropriate surface preparation should be made (contact Polyseam for guidance in these cases). For paints sensitive to sealing compounds, priming with a PVA primer is recommended.
3. When installing the sealant in gypsum boards, the exposed edges of the board can be wetted with water, or Protecta® FR Acrylic diluted with water to prime the surfaces helping adhesion and preventing excessive joint shrinkage.
4. When installing any backing material, cut this slightly oversize and insert into the gap ensuring a tight friction fit. Ensure correct depth is achieved.
5. Fill the gap or joint with Protecta® FR Acrylic to the required depth.
6. Apply the sealant generously to prevent air bubbles. Finish the bead with a moist spatula, pallet knife or brush.
7. Protecta® FR Acrylic can be over-painted with most emulsion or alkyd (gloss) paints.

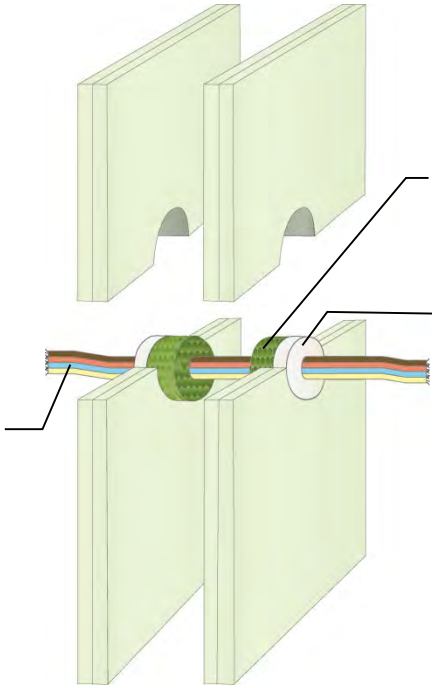

ETA 13/0879 & 13/0880

As a part of our policy of on-going product development and testing, we reserve the right to modify, alter or change product specifications without giving notice. All information contained in this document is given in good faith and is provided for guidance only. Any drawings provided are for illustrative purposes only. As Polyseam has no control over the methods or competence of installation and of prevailing site conditions, no warranties, expressed or implied, is intended to be given as to the actual performance of the product mentioned or referred to herein and no liability whatsoever will be accepted for any loss, damage or injury arising from the use of the information given.

For all technical details on the products specified please refer to the technical data sheets that can be found on www.protecta.eu

Signed and approved:

Client:

Job Title:

Products	Protecta FR Acrylic Stone wool
Application	Fire stopping of cables in flexible walls
Construction	Minimum wall thickness of 100 mm and comprise steel studs or timber studs* lined on both faces with minimum 2 layers of 12.5 mm thick boards

Fire & Sound classification

Cables ≤ Ø21mm single or in a bundle in double sided seal in maximum aperture 300x300mm
EI 120 & E 120

Sound reduction (seal only)
62 dB

Protecta®

Polyseam Ltd, 15 St Andrews Road, Huddersfield, West Yorkshire, HD1 6SB
Tel: +44 (0) 148 4421036
Email: post.uk@polyseam.com

Sheet size: **A4**	Drawn date & no: 20/4/15
Scale: **NTS**	Drawn by: K.B

Installation Instructions

1. Before installing Protecta® FR Acrylic ensure that the surface of all service penetrations and surrounding construction is free from all loose contaminants, dust and grease.
2. Where Protecta® FR Acrylic is to be installed against surfaces that cannot tolerate direct contact; appropriate surface preparation should be made (contact Polyseam for guidance in these cases). For paints sensitive to sealing compounds, priming with a PVA primer is recommended.
3. When installing the sealant in gypsum boards, the exposed edges of the board can be wetted with water, or Protecta® FR Acrylic diluted with water to prime the surfaces helping adhesion and preventing excessive joint shrinkage.
4. When installing any backing material, cut this slightly oversize and insert into the gap ensuring a tight friction fit. Ensure correct depth is achieved.
5. Fill the gap or joint with Protecta® FR Acrylic to the required depth.
6. Apply the sealant generously to prevent air bubbles. Finish the bead with a moist spatula, pallet knife or brush.
7. Protecta® FR Acrylic can be over-painted with most emulsion or alkyd (gloss) paints.

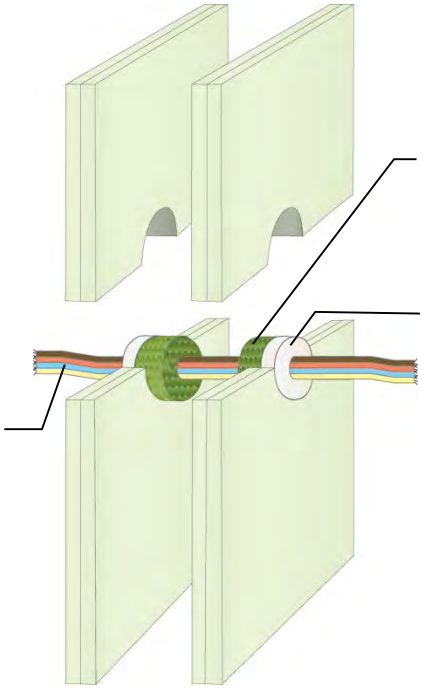

ETA 13/0879 & 13/0880

As a part of our policy of on-going product development and testing, we reserve the right to modify, alter or change product specifications without giving notice. All information contained in this document is given in good faith and is provided for guidance only. Any drawings provided are for illustrative purposes only. As Polyseam has no control over the methods or competence of installation and of prevailing site conditions, no warranties, expressed or implied, is intended to be given as to the actual performance of the product mentioned or referred to herein and no liability whatsoever will be accepted for any loss, damage or injury arising from the use of the information given.

For all technical details on the products specified please refer to the technical data sheets that can be found on www.protecta.eu

Signed and approved:

Client:

Job Title:

Products	Protecta FR Acrylic Protecta Mineral Fibre BIO
Application	Fire stopping of cables in flexible walls
Construction	Minimum wall thickness of 100 mm and comprise steel studs or timber studs* lined on both faces with minimum 2 layers of 12.5 mm thick boards.

Fire & Sound classification

Cables ≤ Ø80mm single or in a bundle in double sided seal in maximum aperture 300x300mm
EI 60 & E 120

Sound reduction (seal only)
62 dB

Polyseam Ltd, 15 St Andrews Road, Huddersfield, West Yorkshire, HD1 6SB
Tel: +44 (0) 148 4421036
Email: post.uk@polyseam.com

Sheet size: **A4**	Drawn date & no: 20/4/15
Scale: **NTS**	Drawn by: K.B

Installation Instructions

1. Before installing Protecta® FR Acrylic ensure that the surface of all service penetrations and surrounding construction is free from all loose contaminants, dust and grease.
2. Where Protecta® FR Acrylic is to be installed against surfaces that cannot tolerate direct contact; appropriate surface preparation should be made (contact Polyseam for guidance in these cases). For paints sensitive to sealing compounds, priming with a PVA primer is recommended.
3. As Protecta® FR Acrylic is water based, in cases where corrosion protection is a problem; some metals may require a barrier between the sealant and the metal surface prior to this installation.
4. When installing the sealant in gypsum boards, the exposed edges of the board can be wetted with water, or Protecta® FR Acrylic diluted with water to prime the surfaces helping adhesion and preventing excessive joint shrinkage.
5. When installing any backing material, cut this slightly oversize and insert into the gap ensuring a tight friction fit. Ensure correct depth is achieved.
6. Fill the gap or joint with Protecta® FR Acrylic to the required depth.
7. Apply the sealant generously to prevent air bubbles. Finish the bead with a moist spatula, pallet knife or brush.
8. Protecta® FR Acrylic can be over-painted with most emulsion or alkyd (gloss) paints.

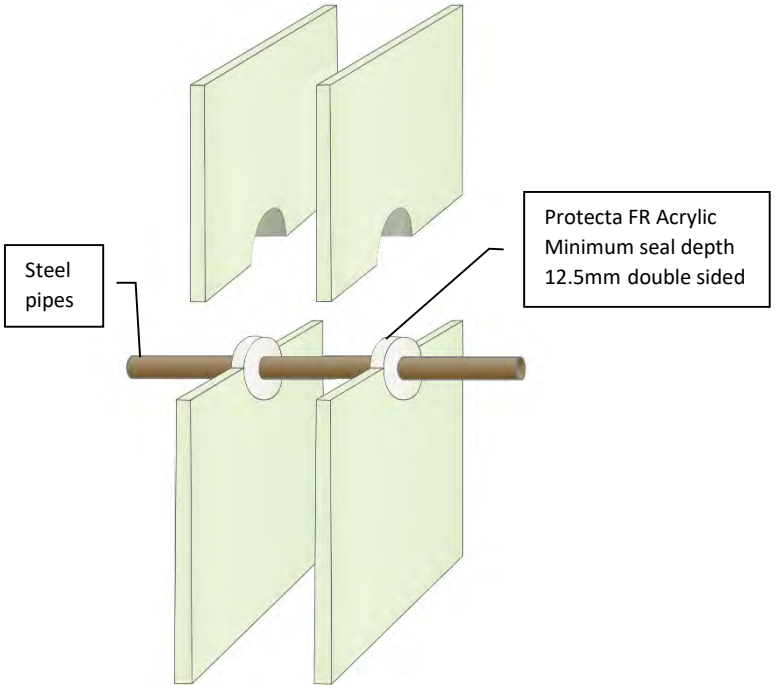

ETA 13/0879 & 13/0880

Client:

Job Title:

Products	Protecta FR Acrylic
Application	Fire stopping of steel pipes in flexible walls
Construction	Minimum wall thickness of 75 mm and comprise steel studs or timber studs* lined on both faces with minimum 1 layer of 12.5 mm thick boards.

Fire & Sound classification

Steel pipes ≤ Ø22mm without pipe insulation in maximum aperture 150x150mm

EI 30 C/U & E 60 C/U

Sound reduction (seal only)

62dB

Polyseam Ltd, 15 St Andrews Road, Huddersfield, West Yorkshire, HD1 6SB
Tel: +44 (0) 148 4421036
Email: post.uk@polyseam.com

For all technical details on the products specified please refer to the technical data sheets that can be found on www.protecta.eu

Signed and approved:

Sheet size: **A4**	Drawn date & no: 8/4/18
Scale: **NTS**	Drawn by: K.B

Installation Instructions

1. Before installing Protecta® FR Acrylic ensure that the surface of all service penetrations and surrounding construction is free from all loose contaminants, dust and grease.
2. Where Protecta® FR Acrylic is to be installed against surfaces that cannot tolerate direct contact; appropriate surface preparation should be made (contact Polyseam for guidance in these cases). For paints sensitive to sealing compounds, priming with a PVA primer is recommended.
3. As Protecta® FR Acrylic is water based, in cases where corrosion protection is a problem; some metals may require a barrier between the sealant and the metal surface prior to this installation.
4. When installing the sealant in gypsum boards, the exposed edges of the board can be wetted with water, or Protecta® FR Acrylic diluted with water to prime the surfaces helping adhesion and preventing excessive joint shrinkage.
5. When installing any backing material, cut this slightly oversize and insert into the gap ensuring a tight friction fit. Ensure correct depth is achieved.
6. Fill the gap or joint with Protecta® FR Acrylic to the required depth.
7. Apply the sealant generously to prevent air bubbles. Finish the bead with a moist spatula, pallet knife or brush.
8. Protecta® FR Acrylic can be over-painted with most emulsion or alkyd (gloss) paints.

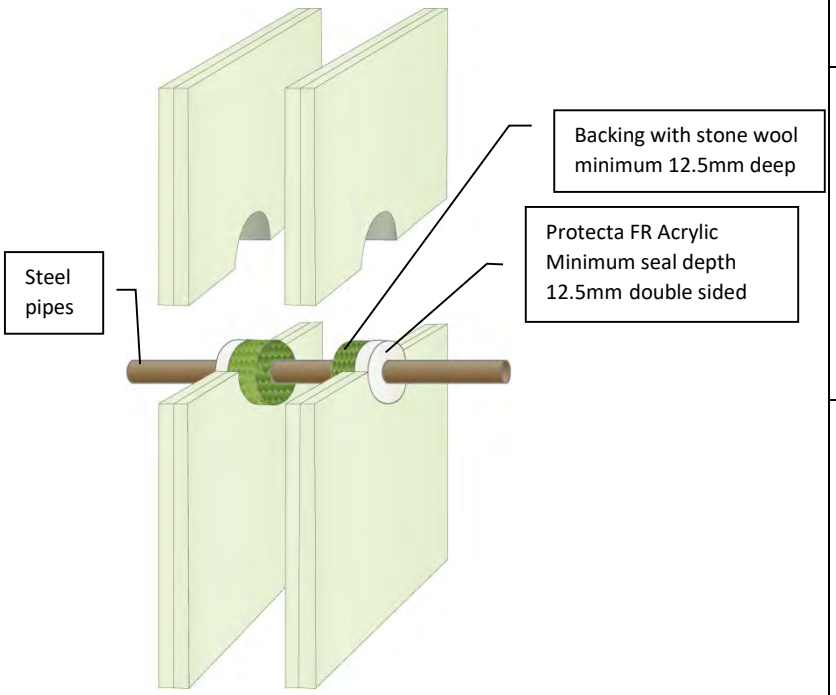

ETA 13/0879 & 13/0880

Client:

Job Title:

Products	Protecta FR Acrylic Stone wool
Application	Fire stopping of steel pipes in flexible walls
Construction	Minimum wall thickness of 100 mm and comprise steel studs or timber studs* lined on both faces with minimum 2 layers of 12.5 mm thick boards.

Fire & Sound classification

Steel pipes ≤ Ø30mm without pipe insulation in maximum aperture 300x300mm

EI 90 C/C & E 90 C/C

Sound reduction (seal only)

62dB

Polyseam Ltd, 15 St Andrews Road, Huddersfield, West Yorkshire, HD1 6SB
Tel: +44 (0) 148 4421036
Email: post.uk@polyseam.com

For all technical details on the products specified please refer to the technical data sheets that can be found on www.protecta.eu

Signed and approved:

Sheet size: **A4**	Drawn date & no: 8/4/18
Scale: **NTS**	Drawn by: K.B

Installation Instructions

1. Before installing Protecta® FR Acrylic ensure that the surface of all service penetrations and surrounding construction is free from all loose contaminants, dust and grease.
2. Where Protecta® FR Acrylic is to be installed against surfaces that cannot tolerate direct contact; appropriate surface preparation should be made (contact Polyseam for guidance in these cases). For paints sensitive to sealing compounds, priming with a PVA primer is recommended.
3. As Protecta® FR Acrylic is water based, in cases where corrosion protection is a problem; some metals may require a barrier between the sealant and the metal surface prior to this installation.
4. When installing the sealant in gypsum boards, the exposed edges of the board can be wetted with water, or Protecta® FR Acrylic diluted with water to prime the surfaces helping adhesion and preventing excessive joint shrinkage.
5. When installing any backing material, cut this slightly oversize and insert into the gap ensuring a tight friction fit. Ensure correct depth is achieved.
6. Fill the gap or joint with Protecta® FR Acrylic to the required depth.
7. Apply the sealant generously to prevent air bubbles. Finish the bead with a moist spatula, pallet knife or brush.
8. Protecta® FR Acrylic can be over-painted with most emulsion or alkyd (gloss) paints.

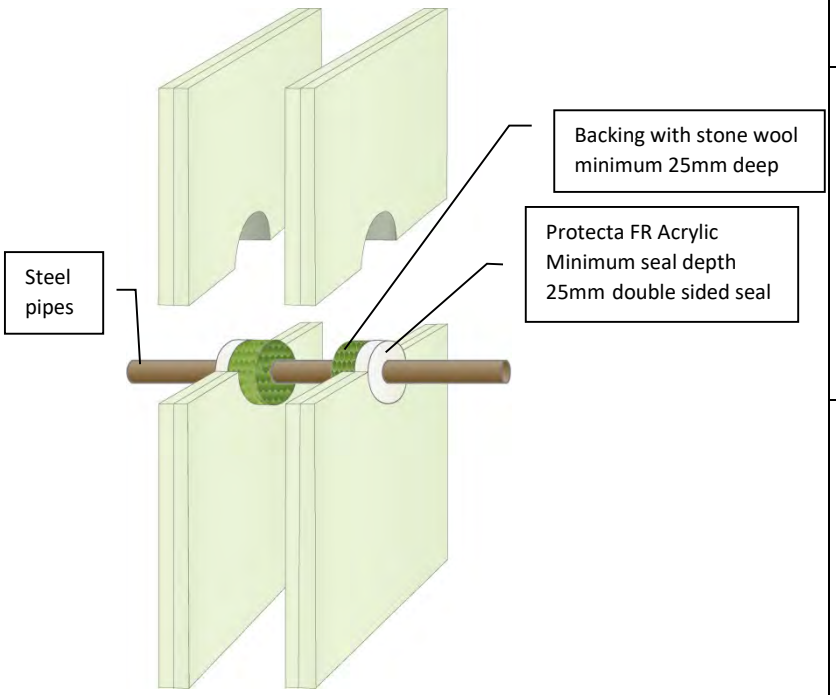

ETA 13/0879 & 13/0880

Client:

Job Title:

Products	Protecta FR Acrylic Stone wool
Application	Fire stopping of steel pipes in flexible walls
Construction	Minimum wall thickness of 100 mm and comprise steel studs or timber studs* lined on both faces with minimum 2 layers of 12.5 mm thick boards.

Fire & Sound classification

Steel pipes Ø22 - Ø30mm without pipe insulation in maximum aperture 300x300mm

EI 120 C/C & E 120 C/C

Sound reduction (seal only)

62dB

Polyseam Ltd, 15 St Andrews Road, Huddersfield, West Yorkshire, HD1 6SB
Tel: +44 (0) 148 4421036
Email: post.uk@polyseam.com

For all technical details on the products specified please refer to the technical data sheets that can be found on www.protecta.eu

Signed and approved:

Sheet size: **A4**	Drawn date & no: 8/4/18
Scale: **NTS**	Drawn by: K.B

Installation Instructions

1. Before installing Protecta® FR Acrylic ensure that the surface of all service penetrations and surrounding construction is free from all loose contaminants, dust and grease.
2. Where Protecta® FR Acrylic is to be installed against surfaces that cannot tolerate direct contact; appropriate surface preparation should be made (contact Polyseam for guidance in these cases). For paints sensitive to sealing compounds, priming with a PVA primer is recommended.
3. When installing the sealant in gypsum boards, the exposed edges of the board can be wetted with water, or Protecta® FR Acrylic diluted with water to prime the surfaces helping adhesion and preventing excessive joint shrinkage.
4. When installing any backing material, cut this slightly oversize and insert into the gap ensuring a tight friction fit. Ensure correct depth is achieved.
5. Fill the gap or joint with Protecta® FR Acrylic to the required depth.
6. Apply the sealant generously to prevent air bubbles. Finish the bead with a moist spatula, pallet knife or brush.
7. Protecta® FR Acrylic can be over-painted with most emulsion or alkyd (gloss) paints.

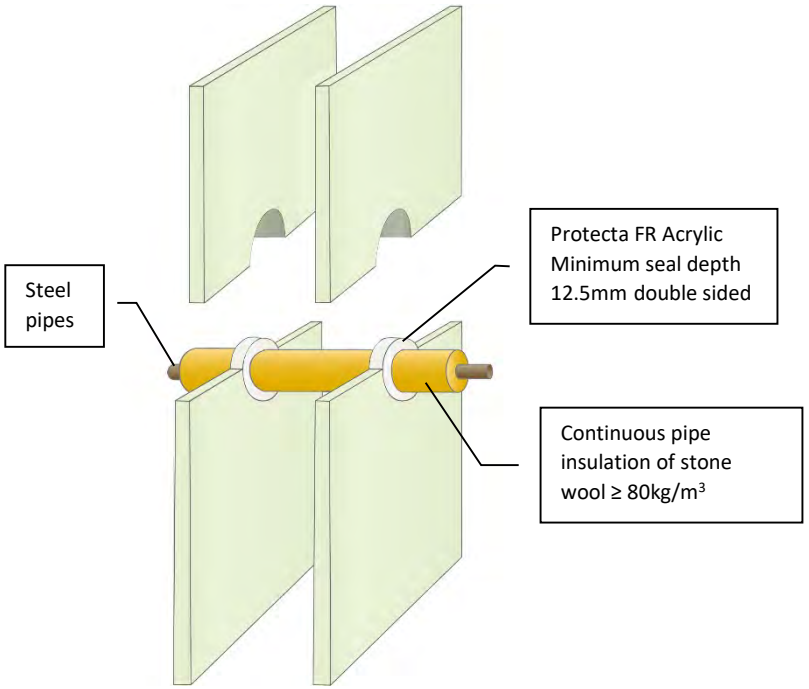

Client:

Job Title:

Products	Protecta FR Acrylic
Application	Fire stopping of steel pipes in flexible walls
Construction	Minimum wall thickness of 75 mm and comprise steel studs or timber studs* lined on both faces with minimum 1 layer of 12.5 mm thick boards.

Fire & Sound classification

Steel pipes ≤ Ø324mm with 20-30mm thick pipe insulation in maximum aperture 150x150mm or Ø404mm

EI 45 C/U & E 60 C/U

Sound reduction (seal only)

62dB

ETA 13/0879 & 13/0880

Polyseam Ltd, 15 St Andrews Road, Huddersfield, West Yorkshire, HD1 6SB
Tel: +44 (0) 148 4421036
Email: post.uk@polyseam.com

For all technical details on the products specified please refer to the technical data sheets that can be found on www.protecta.eu

Signed and approved:

Sheet size: **A4**	Drawn date & no: 8/4/18
Scale: **NTS**	Drawn by: K.B

Installation Instructions

1. Before installing Protecta® FR Acrylic ensure that the surface of all service penetrations and surrounding construction is free from all loose contaminants, dust and grease.
2. Where Protecta® FR Acrylic is to be installed against surfaces that cannot tolerate direct contact; appropriate surface preparation should be made (contact Polyseam for guidance in these cases). For paints sensitive to sealing compounds, priming with a PVA primer is recommended.
3. When installing the sealant in gypsum boards, the exposed edges of the board can be wetted with water, or Protecta® FR Acrylic diluted with water to prime the surfaces helping adhesion and preventing excessive joint shrinkage.
4. When installing any backing material, cut this slightly oversize and insert into the gap ensuring a tight friction fit. Ensure correct depth is achieved.
5. Fill the gap or joint with Protecta® FR Acrylic to the required depth.
6. Apply the sealant generously to prevent air bubbles. Finish the bead with a moist spatula, pallet knife or brush.
7. Protecta® FR Acrylic can be over-painted with most emulsion or alkyd (gloss) paints.

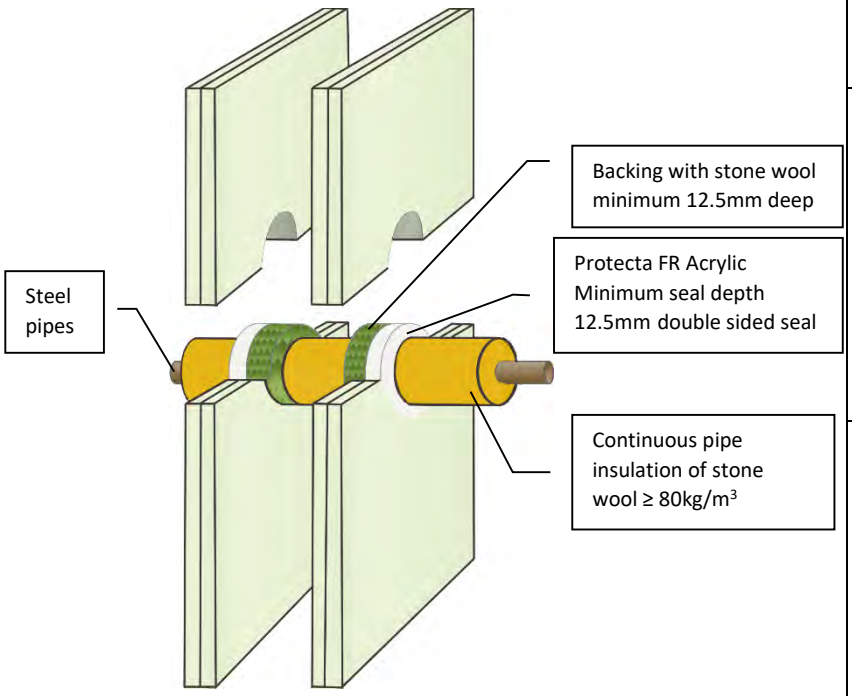

Client:

Job Title:

Products	Protecta FR Acrylic Stone wool
Application	Fire stopping of steel pipes in flexible walls
Construction	Minimum wall thickness of 100 mm and comprise steel studs or timber studs* lined on both faces with minimum 2 layers of 12.5 mm thick boards.

Fire & Sound classification

Steel pipes ≤ Ø324mm with 20-80mm thick pipe insulation in maximum aperture 300x300mm or Ø505mm

EI 90 C/U & E 120 C/U

Sound reduction (seal only)

62dB

ETA 13/0879 & 13/0880

Polyseam Ltd, 15 St Andrews Road, Huddersfield, West Yorkshire, HD1 6SB
Tel: +44 (0) 148 4421036
Email: post.uk@polyseam.com

For all technical details on the products specified please refer to the technical data sheets that can be found on www.protecta.eu

Signed and approved:

Sheet size: **A4**	Drawn date & no: 20/4/15
Scale: **NTS**	Drawn by: K.B

Installation Instructions

1. Before installing Protecta® FR Acrylic ensure that the surface of all service penetrations and surrounding construction is free from all loose contaminants, dust and grease.
2. Where Protecta® FR Acrylic is to be installed against surfaces that cannot tolerate direct contact; appropriate surface preparation should be made (contact Polyseam for guidance in these cases). For paints sensitive to sealing compounds, priming with a PVA primer is recommended.
3. As Protecta® FR Acrylic is water based, in cases where corrosion protection is a problem; some metals may require a barrier between the sealant and the metal surface prior to this installation.
4. When installing the sealant in gypsum boards, the exposed edges of the board can be wetted with water, or Protecta® FR Acrylic diluted with water to prime the surfaces helping adhesion and preventing excessive joint shrinkage.
5. When installing any backing material, cut this slightly oversize and insert into the gap ensuring a tight friction fit. Ensure correct depth is achieved.
6. Fill the gap or joint with Protecta® FR Acrylic to the required depth.
7. Apply the sealant generously to prevent air bubbles. Finish the bead with a moist spatula, pallet knife or brush.
8. Protecta® FR Acrylic can be over-painted with most emulsion or alkyd (gloss) paints.

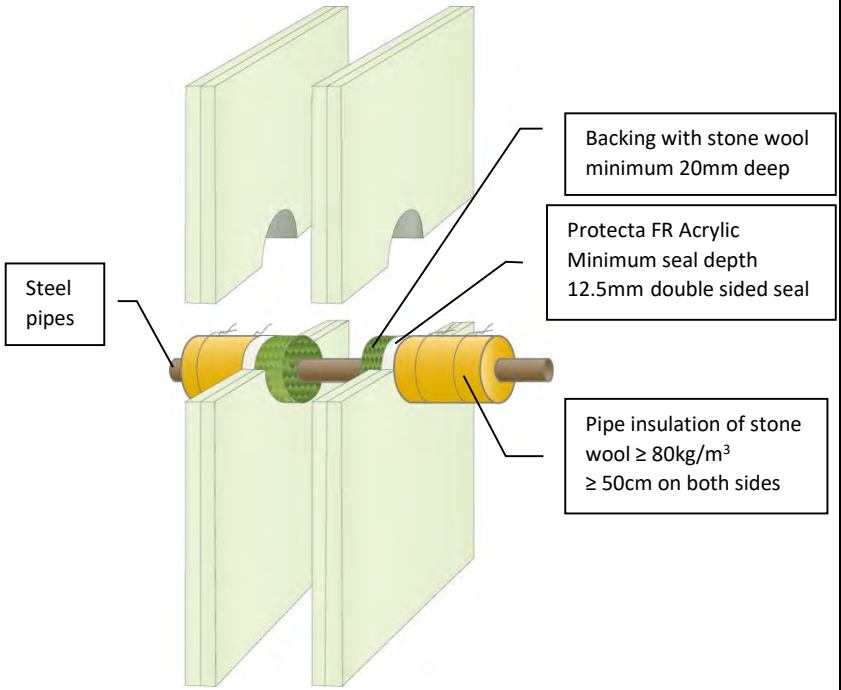

ETA 13/0879 & 13/0880

Client:

Job Title:

Products	Protecta FR Acrylic Stone wool
Application	Fire stopping of steel pipes in flexible walls
Construction	Minimum wall thickness of 100 mm and comprise steel studs or timber studs* lined on both faces with minimum 2 layers of 12.5 mm thick boards.

Fire & Sound classification

Steel pipes ≤ Ø40mm with ≥ 20mm thick pipe insulation in maximum aperture 300x300mm
EI 120 C/U & E 120 C/U

Steel pipes ≤ Ø219mm with ≥ 30mm thick pipe insulation in maximum aperture 300x300mm
EI 90 C/U & E 120 C/U

Sound reduction (seal only) 62dB

Protecta®

Polyseam Ltd, 15 St Andrews Road,
Huddersfield, West Yorkshire, HD1 6SB
Tel: +44 (0) 148 4421036
Email: post.uk@polyseam.com

For all technical details on the products specified please refer to the technical data sheets that can be found on www.protecta.eu

Signed and approved:

Sheet size: **A4**	Drawn date & no: 20/4/15
Scale: **NTS**	Drawn by: K.B

Installation Instructions

1. Before installing Protecta® FR Acrylic ensure that the surface of all service penetrations and surrounding construction is free from all loose contaminants, dust and grease.
2. Where Protecta® FR Acrylic is to be installed against surfaces that cannot tolerate direct contact; appropriate surface preparation should be made (contact Polyseam for guidance in these cases). For paints sensitive to sealing compounds, priming with a PVA primer is recommended.
3. When installing the sealant in gypsum boards, the exposed edges of the board can be wetted with water, or Protecta® FR Acrylic diluted with water to prime the surfaces helping adhesion and preventing excessive joint shrinkage.
4. When installing any backing material, cut this slightly oversize and insert into the gap ensuring a tight friction fit. Ensure correct depth is achieved.
5. Fill the gap or joint with Protecta® FR Acrylic to the required depth.
6. Apply the sealant generously to prevent air bubbles. Finish the bead with a moist spatula, pallet knife or brush.
7. Protecta® FR Acrylic can be over-painted with most emulsion or alkyd (gloss) paints.

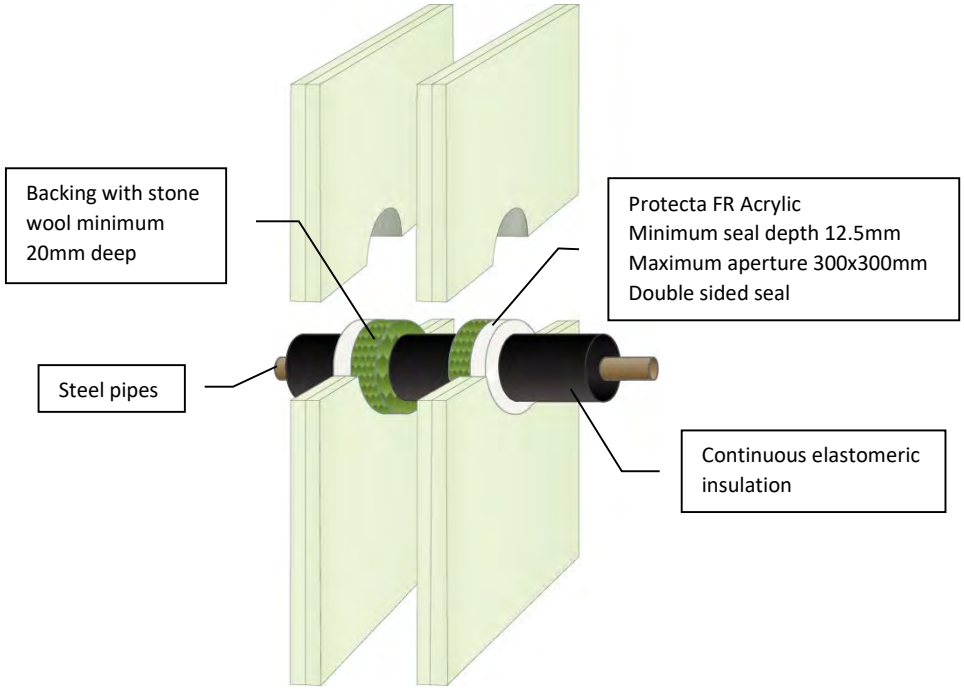

ETA 13/0879 & 13/0880

As a part of our policy of on-going product development and testing, we reserve the right to modify, alter or change product specifications without giving notice. All information contained in this document is given in good faith and is provided for guidance only. Any drawings provided are for illustrative purposes only. As Polyseam has no control over the methods or competence of installation and of prevailing site conditions, no warranties, expressed or implied, is intended to be given as to the actual performance of the product mentioned or referred to herein and no liability whatsoever will be accepted for any loss, damage or injury arising from the use of the information given.

For all technical details on the products specified please refer to the technical data sheets that can be found on www.protecta.eu

Signed and approved:

Client:

Job Title:

Products	Protecta FR Acrylic Stone wool
Application	Fire stopping of steel pipes in flexible walls
Construction	Minimum wall thickness of 100 mm and comprise steel studs or timber studs* lined on both faces with minimum 2 layers of 12.5 mm thick boards.

Fire & Sound classification

Steel pipes ≤ Ø40mm with 13 – 19mm thick pipe insulation

EI 120 C/C & E 120 C/C

Sound reduction (seal only)

62dB

Protecta®

Polyseam Ltd, 15 St Andrews Road, Huddersfield, West Yorkshire, HD1 6SB
Tel: +44 (0) 148 4421036
Email: post.uk@polyseam.com

Sheet size: **A4**	Drawn date & no: 23/4/15
Scale: **NTS**	Drawn by: K.B

Installation Instructions

1. Before installing Protecta® FR Acrylic ensure that the surface of all service penetrations and surrounding construction is free from all loose contaminants, dust and grease.
2. Where Protecta® FR Acrylic is to be installed against surfaces that cannot tolerate direct contact; appropriate surface preparation should be made (contact Polyseam for guidance in these cases). For paints sensitive to sealing compounds, priming with a PVA primer is recommended.
3. When installing the sealant in gypsum boards, the exposed edges of the board can be wetted with water, or Protecta® FR Acrylic diluted with water to prime the surfaces helping adhesion and preventing excessive joint shrinkage.
4. When installing any backing material, cut this slightly oversize and insert into the gap ensuring a tight friction fit. Ensure correct depth is achieved.
5. Fill the gap or joint with Protecta® FR Acrylic to the required depth.
6. Apply the sealant generously to prevent air bubbles. Finish the bead with a moist spatula, pallet knife or brush.
7. Protecta® FR Acrylic can be over-painted with most emulsion or alkyd (gloss) paints.

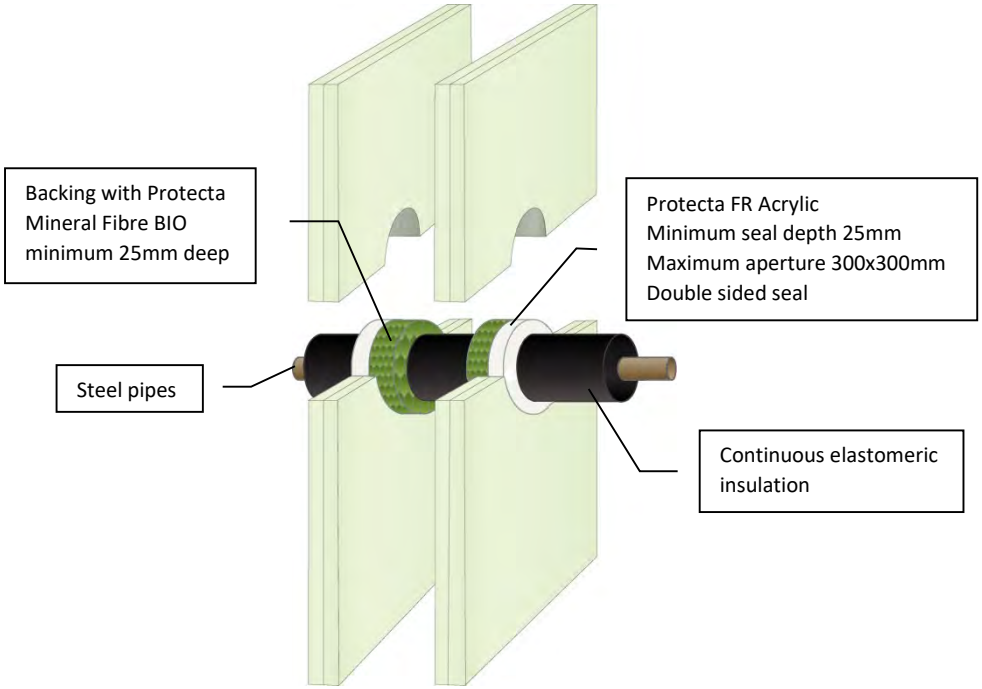

ETA 13/0879 & 13/0880

As a part of our policy of on-going product development and testing, we reserve the right to modify, alter or change product specifications without giving notice. All information contained in this document is given in good faith and is provided for guidance only. Any drawings provided are for illustrative purposes only. As Polyseam has no control over the methods or competence of installation and of prevailing site conditions, no warranties, expressed or implied, is intended to be given as to the actual performance of the product mentioned or referred to herein and no liability whatsoever will be accepted for any loss, damage or injury arising from the use of the information given.

For all technical details on the products specified please refer to the technical data sheets that can be found on www.protecta.eu

Signed and approved:

Client:

Job Title:

Products	Protecta FR Acrylic Protecta Mineral Fibre BIO
Application	Fire stopping of steel pipes in flexible walls
Construction	Minimum wall thickness of 100 mm and comprise steel studs or timber studs* lined on both faces with minimum 2 layers of 12.5 mm thick boards.

Fire & Sound classification

Steel pipes ≤ Ø165mm with 13 – 19mm thick pipe insulation

EI 60 C/C & E 120 C/C

Sound reduction (seal only)

62dB

Polyseam Ltd, 15 St Andrews Road, Huddersfield, West Yorkshire, HD1 6SB
Tel: +44 (0) 148 4421036
Email: post.uk@polyseam.com

Sheet size: **A4**	Drawn date & no: 23/4/15
Scale: **NTS**	Drawn by: K.B

Installation Instructions

1. Before installing Protecta® FR Acrylic ensure that the surface of all service penetrations and surrounding construction is free from all loose contaminants, dust and grease.
2. Where Protecta® FR Acrylic is to be installed against surfaces that cannot tolerate direct contact; appropriate surface preparation should be made (contact Polyseam for guidance in these cases). For paints sensitive to sealing compounds, priming with a PVA primer is recommended.
3. As Protecta® FR Acrylic is water based, in cases where corrosion protection is a problem; some metals may require a barrier between the sealant and the metal surface prior to this installation.
4. When installing the sealant in gypsum boards, the exposed edges of the board can be wetted with water, or Protecta® FR Acrylic diluted with water to prime the surfaces helping adhesion and preventing excessive joint shrinkage.
5. When installing any backing material, cut this slightly oversize and insert into the gap ensuring a tight friction fit. Ensure correct depth is achieved.
6. Fill the gap or joint with Protecta® FR Acrylic to the required depth.
7. Apply the sealant generously to prevent air bubbles. Finish the bead with a moist spatula, pallet knife or brush.
8. Protecta® FR Acrylic can be over-painted with most emulsion or alkyd (gloss) paints.

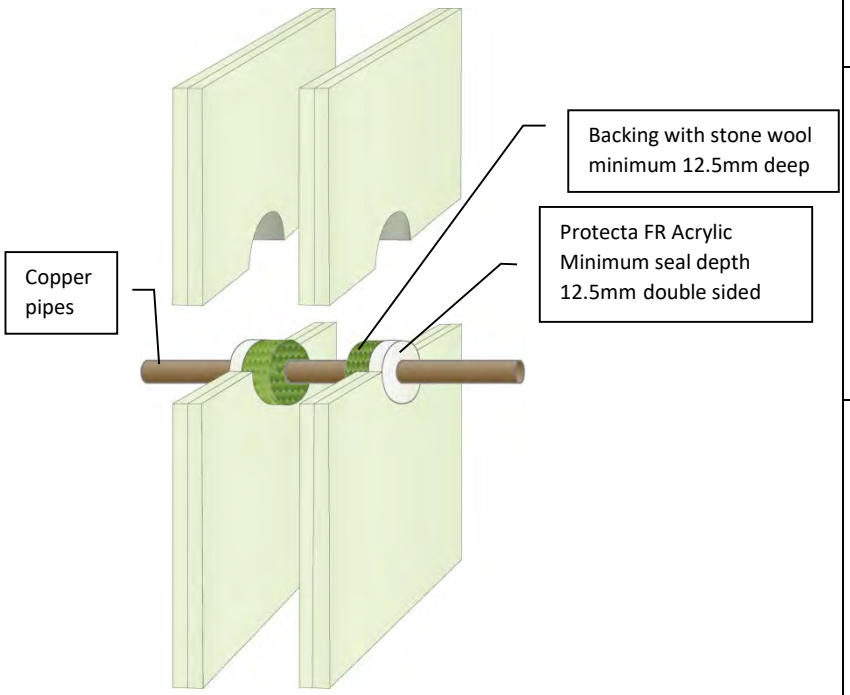

ETA 13/0879 & 13/0880

As a part of our policy of on-going product development and testing, we reserve the right to modify, alter or change product specifications without giving notice. All information contained in this document is given in good faith and is provided for guidance only. Any drawings provided are for illustrative purposes only. As Polyseam has no control over the methods or competence of installation and of prevailing site conditions, no warranties, expressed or implied, is intended to be given as to the actual performance of the product mentioned or referred to herein and no liability whatsoever will be accepted for any loss, damage or injury arising from the use of the information given.

For all technical details on the products specified please refer to the technical data sheets that can be found on www.protecta.eu

Signed and approved:

Client:

Job Title:

Products	Protecta FR Acrylic Stone wool
Application	Fire stopping of copper pipes in flexible walls
Construction	Minimum wall thickness of 100 mm and comprise steel studs or timber studs* lined on both faces with minimum 2 layers of 12.5 mm thick boards.

Fire & Sound classification

Copper pipes ≤ Ø6mm without pipe insulation in maximum aperture 300x300mm
EI 60 C/C & E 90 C/C

Copper pipes ≤ Ø22mm without pipe insulation in maximum aperture 300x300mm
EI 30 C/C & E 90 C/C

Sound reduction (seal only) 62dB

Polyseam Ltd, 15 St Andrews Road, Huddersfield, West Yorkshire, HD1 6SB
Tel: +44 (0) 148 4421036
Email: post.uk@polyseam.com

Sheet size: **A4**	Drawn date & no: 8/4/18
Scale: **NTS**	Drawn by: K.B

Installation Instructions

1. Before installing Protecta® FR Acrylic ensure that the surface of all service penetrations and surrounding construction is free from all loose contaminants, dust and grease.
2. Where Protecta® FR Acrylic is to be installed against surfaces that cannot tolerate direct contact; appropriate surface preparation should be made (contact Polyseam for guidance in these cases). For paints sensitive to sealing compounds, priming with a PVA primer is recommended.
3. As Protecta® FR Acrylic is water based, in cases where corrosion protection is a problem; some metals may require a barrier between the sealant and the metal surface prior to this installation.
4. When installing the sealant in gypsum boards, the exposed edges of the board can be wetted with water, or Protecta® FR Acrylic diluted with water to prime the surfaces helping adhesion and preventing excessive joint shrinkage.
5. When installing any backing material, cut this slightly oversize and insert into the gap ensuring a tight friction fit. Ensure correct depth is achieved.
6. Fill the gap or joint with Protecta® FR Acrylic to the required depth.
7. Apply the sealant generously to prevent air bubbles. Finish the bead with a moist spatula, pallet knife or brush.
8. Protecta® FR Acrylic can be over-painted with most emulsion or alkyd (gloss) paints.

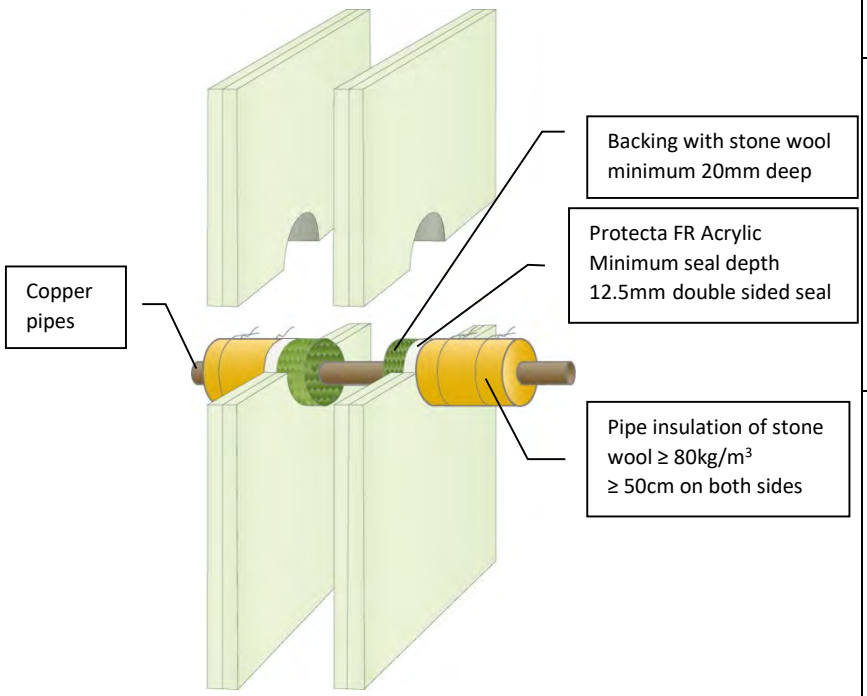

Client:

Job Title:

Products	Protecta FR Acrylic Stone wool
Application	Fire stopping of copper pipes in flexible walls
Construction	Minimum wall thickness of 100 mm and comprise steel studs or timber studs* lined on both faces with minimum 2 layers of 12.5 mm thick boards.

Fire & Sound classification

Copper pipes ≤ Ø54mm with ≥ 20mm thick pipe insulation in maximum aperture 300x300mm

EI 120 C/U & E 120 C/U

Sound reduction (seal only)

62dB

ETA 13/0879 & 13/0880

Polyseam Ltd, 15 St Andrews Road, Huddersfield, West Yorkshire, HD1 6SB
Tel: +44 (0) 148 4421036
Email: post.uk@polyseam.com

For all technical details on the products specified please refer to the technical data sheets that can be found on www.protecta.eu

Signed and approved:

Sheet size: **A4**	Drawn date & no: 23/4/15
Scale: **NTS**	Drawn by: K.B

Installation Instructions

1. Before installing Protecta® FR Acrylic ensure that the surface of all service penetrations and surrounding construction is free from all loose contaminants, dust and grease.
2. Where Protecta® FR Acrylic is to be installed against surfaces that cannot tolerate direct contact; appropriate surface preparation should be made (contact Polyseam for guidance in these cases). For paints sensitive to sealing compounds, priming with a PVA primer is recommended.
3. When installing the sealant in gypsum boards, the exposed edges of the board can be wetted with water, or Protecta® FR Acrylic diluted with water to prime the surfaces helping adhesion and preventing excessive joint shrinkage.
4. When installing any backing material, cut this slightly oversize and insert into the gap ensuring a tight friction fit. Ensure correct depth is achieved.
5. Fill the gap or joint with Protecta® FR Acrylic to the required depth.
6. Apply the sealant generously to prevent air bubbles. Finish the bead with a moist spatula, pallet knife or brush.
7. Protecta® FR Acrylic can be over-painted with most emulsion or alkyd (gloss) paints.

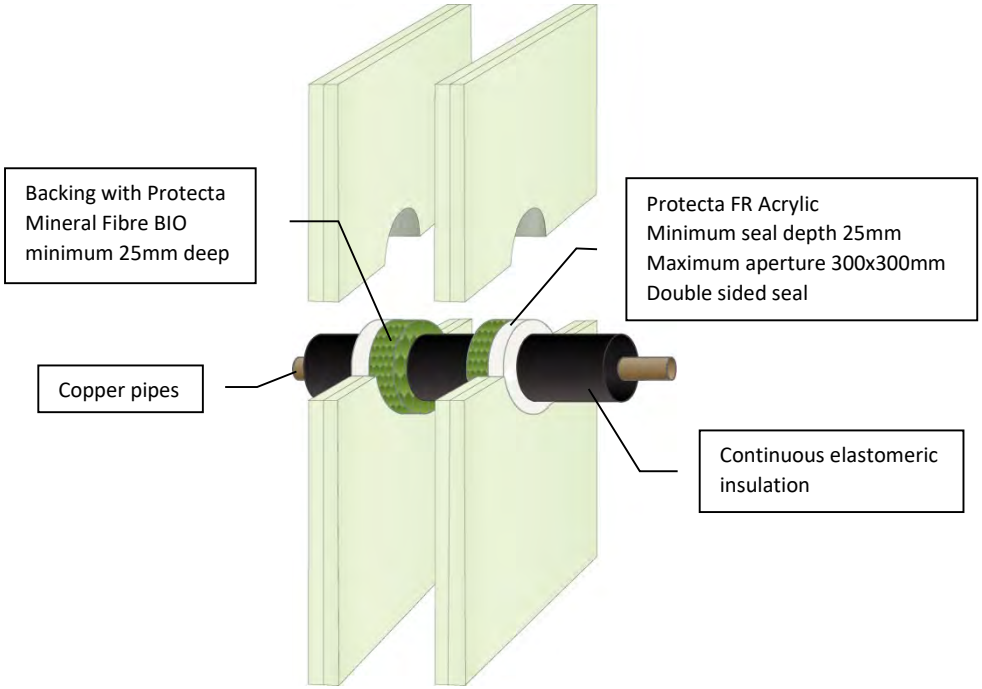

ETA 13/0879 & 13/0880

Client:

Job Title:

Products	Protecta FR Acrylic Protecta Mineral Fibre BIO
Application	Fire stopping of copper pipes in flexible walls
Construction	Minimum wall thickness of 100 mm and comprise steel studs or timber studs* lined on both faces with minimum 2 layers of 12.5 mm thick boards.

Fire & Sound classification

Copper pipes ≤ Ø12mm with 9mm thick pipe insulation EI 120 C/C & E 120 C/C

Copper pipes ≤ Ø54mm with 9 – 13mm thick pipe insulation EI 60 C/C & E 120 C/C

Copper pipes ≤ Ø54mm with 14 – 25mm thick pipe insulation EI 60 C/C & E 60 C/C

Sound reduction (seal only) 62dB

Polyseam Ltd, 15 St Andrews Road, Huddersfield, West Yorkshire, HD1 6SB
Tel: +44 (0) 148 4421036
Email: post.uk@polyseam.com

For all technical details on the products specified please refer to the technical data sheets that can be found on www.protecta.eu

Signed and approved:

Sheet size: **A4**	Drawn date & no: 23/4/15
Scale: **NTS**	Drawn by: K.B

Installation Instructions

1. Before installing Protecta® FR Acrylic ensure that the surface of all service penetrations and surrounding construction is free from all loose contaminants, dust and grease.
2. Where Protecta® FR Acrylic is to be installed against surfaces that cannot tolerate direct contact; appropriate surface preparation should be made (contact Polyseam for guidance in these cases). For paints sensitive to sealing compounds, priming with a PVA primer is recommended.
3. As Protecta® FR Acrylic is water based, in cases where corrosion protection is a problem; some metals may require a barrier between the sealant and the metal surface prior to this installation.
4. When installing the sealant in gypsum boards, the exposed edges of the board can be wetted with water, or Protecta® FR Acrylic diluted with water to prime the surfaces helping adhesion and preventing excessive joint shrinkage.
5. When installing any backing material, cut this slightly oversize and insert into the gap ensuring a tight friction fit. Ensure correct depth is achieved.
6. Fill the gap or joint with Protecta® FR Acrylic to the required depth.
7. Apply the sealant generously to prevent air bubbles. Finish the bead with a moist spatula, pallet knife or brush.
8. Protecta® FR Acrylic can be over-painted with most emulsion or alkyd (gloss) paints.

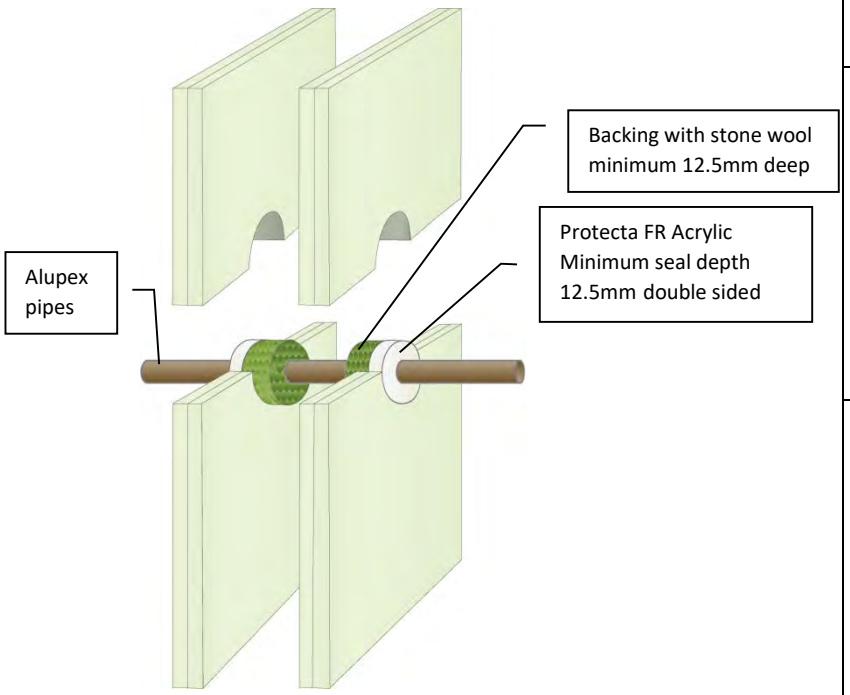

ETA 13/0879 & 13/0880

Client:

Job Title:

Products	Protecta FR Acrylic Stone wool
Application	Fire stopping of alupex pipes in flexible walls
Construction	Minimum wall thickness of 100 mm and comprise steel studs or timber studs* lined on both faces with minimum 2 layers of 12.5 mm thick boards.

Fire & Sound classification

Alupex pipes ≤ Ø20mm without pipe insulation in maximum aperture 300x300mm

EI 120 C/C & E 120 C/C

Sound reduction (seal only)

62dB

Polyseam Ltd, 15 St Andrews Road, Huddersfield, West Yorkshire, HD1 6SB
Tel: +44 (0) 148 4421036
Email: post.uk@polyseam.com

For all technical details on the products specified please refer to the technical data sheets that can be found on www.protecta.eu

Signed and approved:

Sheet size: **A4**	Drawn date & no: 8/4/18
Scale: **NTS**	Drawn by: K.B

Installation Instructions

1. Before installing Protecta® FR Acrylic ensure that the surface of all service penetrations and surrounding construction is free from all loose contaminants, dust and grease.
2. Where Protecta® FR Acrylic is to be installed against surfaces that cannot tolerate direct contact; appropriate surface preparation should be made (contact Polyseam for guidance in these cases). For paints sensitive to sealing compounds, priming with a PVA primer is recommended.
3. As Protecta® FR Acrylic is water based, in cases where corrosion protection is a problem; some metals may require a barrier between the sealant and the metal surface prior to this installation.
4. When installing the sealant in gypsum boards, the exposed edges of the board can be wetted with water, or Protecta® FR Acrylic diluted with water to prime the surfaces helping adhesion and preventing excessive joint shrinkage.
5. When installing any backing material, cut this slightly oversize and insert into the gap ensuring a tight friction fit. Ensure correct depth is achieved.
6. Fill the gap or joint with Protecta® FR Acrylic to the required depth.
7. Apply the sealant generously to prevent air bubbles. Finish the bead with a moist spatula, pallet knife or brush.
8. Protecta® FR Acrylic can be over-painted with most emulsion or alkyd (gloss) paints.

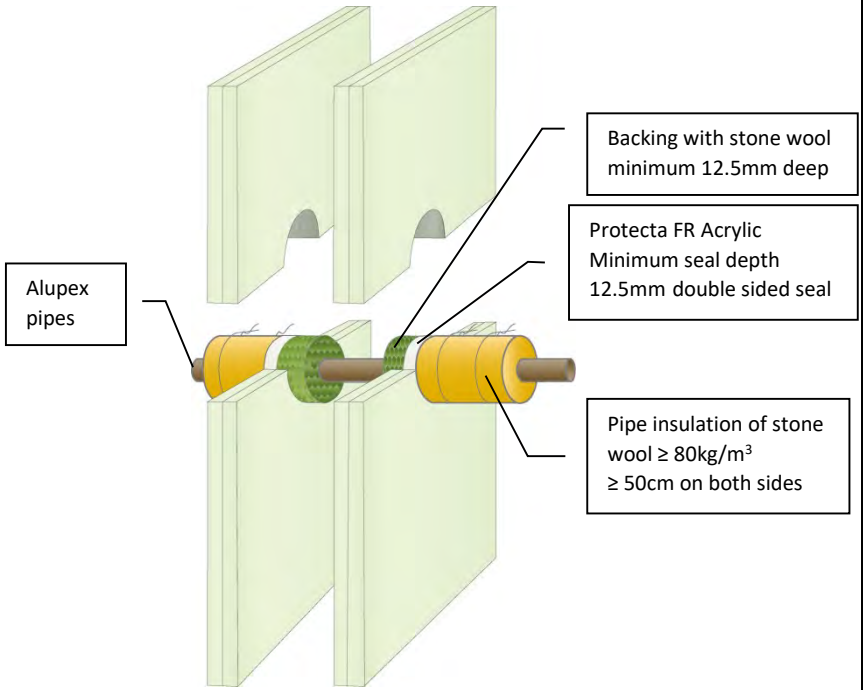

Client:

Job Title:

Products	Protecta FR Acrylic Stone wool
Application	Fire stopping of alupex pipes in flexible walls
Construction	Minimum wall thickness of 100 mm and comprise steel studs or timber studs* lined on both faces with minimum 2 layers of 12.5 mm thick boards.

Fire & Sound classification

Alupex pipes ≤ Ø75mm with ≥ 20mm thick pipe insulation in maximum aperture 300x300mm

EI 120 C/C & E 120 C/C

Sound reduction (seal only)

62dB

ETA 13/0879 & 13/0880

Polyseam Ltd, 15 St Andrews Road, Huddersfield, West Yorkshire, HD1 6SB
Tel: +44 (0) 148 4421036
Email: post.uk@polyseam.com

For all technical details on the products specified please refer to the technical data sheets that can be found on www.protecta.eu

Signed and approved:

Sheet size: **A4**	Drawn date & no: 23/4/15
Scale: **NTS**	Drawn by: K.B

Installation Instructions

1. Before installing Protecta® FR Acrylic ensure that the surface of all service penetrations and surrounding construction is free from all loose contaminants, dust and grease.
2. Where Protecta® FR Acrylic is to be installed against surfaces that cannot tolerate direct contact; appropriate surface preparation should be made (contact Polyseam for guidance in these cases). For paints sensitive to sealing compounds, priming with a PVA primer is recommended.
3. When installing the sealant in gypsum boards, the exposed edges of the board can be wetted with water, or Protecta® FR Acrylic diluted with water to prime the surfaces helping adhesion and preventing excessive joint shrinkage.
4. When installing any backing material, cut this slightly oversize and insert into the gap ensuring a tight friction fit. Ensure correct depth is achieved.
5. Fill the gap or joint with Protecta® FR Acrylic to the required depth.
6. Apply the sealant generously to prevent air bubbles. Finish the bead with a moist spatula, pallet knife or brush.
7. Protecta® FR Acrylic can be over-painted with most emulsion or alkyd (gloss) paints.

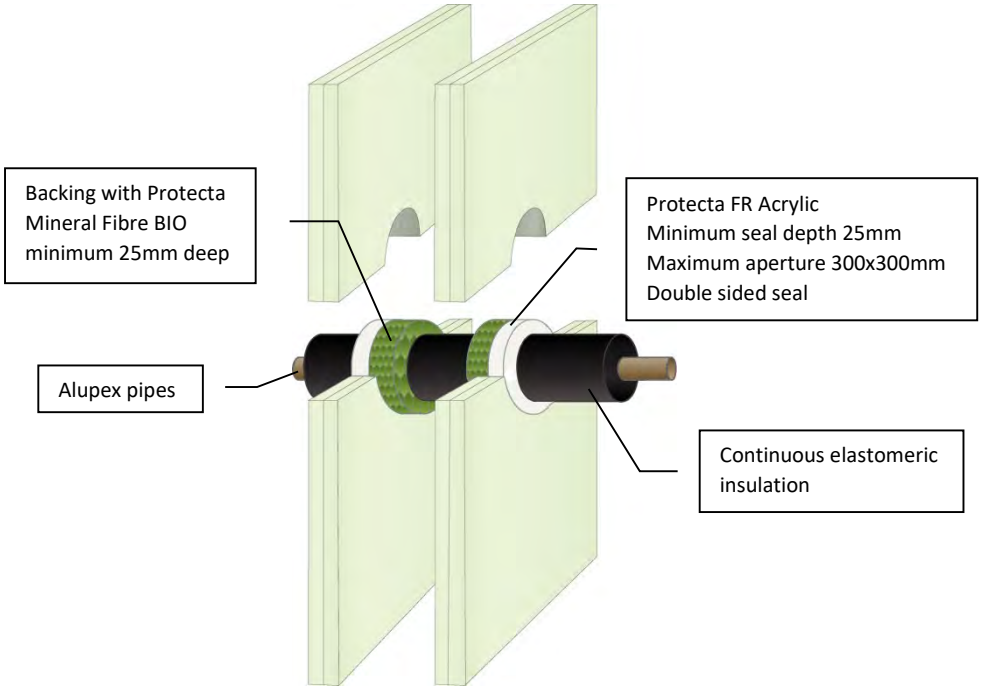

ETA 13/0879 & 13/0880

Client:

Job Title:

Products	Protecta FR Acrylic Protecta Mineral Fibre BIO
Application	Fire stopping of alupex pipes in flexible walls
Construction	Minimum wall thickness of 100 mm and comprise steel studs or timber studs* lined on both faces with minimum 2 layers of 12.5 mm thick boards.

Fire & Sound classification

Alupex pipes ≤ Ø16mm with 9mm thick pipe insulation EI 120 C/C & E 120 C/C

Alupex pipes ≤ Ø75mm with 9 – 25mm thick pipe insulation EI 60 C/C & E 60 C/C

Sound reduction (seal only) 62dB

Polyseam Ltd, 15 St Andrews Road, Huddersfield, West Yorkshire, HD1 6SB
Tel: +44 (0) 148 4421036
Email: post.uk@polyseam.com

For all technical details on the products specified please refer to the technical data sheets that can be found on www.protecta.eu

Signed and approved:

Sheet size: **A4**	Drawn date & no: 23/4/15
Scale: **NTS**	Drawn by: K.B

Installation Instructions

1. Before installing Protecta® FR Acrylic ensure that the surface of all service penetrations and surrounding construction is free from all loose contaminants, dust and grease.
2. Where Protecta® FR Acrylic is to be installed against surfaces that cannot tolerate direct contact; appropriate surface preparation should be made (contact Polyseam for guidance in these cases). For paints sensitive to sealing compounds, priming with a PVA primer is recommended.
3. When installing the sealant in gypsum boards, the exposed edges of the board can be wetted with water, or Protecta® FR Acrylic diluted with water to prime the surfaces helping adhesion and preventing excessive joint shrinkage.
4. When installing any backing material, cut this slightly oversize and insert into the gap ensuring a tight friction fit. Ensure correct depth is achieved.
5. Fill the gap or joint with Protecta® FR Acrylic to the required depth.
6. Apply the sealant generously to prevent air bubbles. Finish the bead with a moist spatula, pallet knife or brush.
7. Protecta® FR Acrylic can be over-painted with most emulsion or alkyd (gloss) paints.

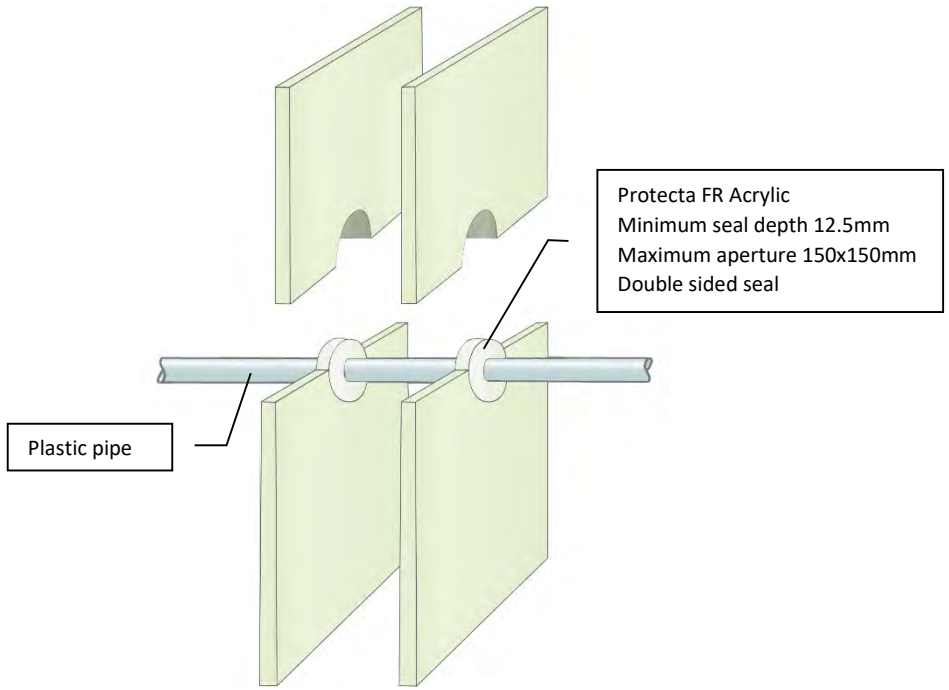

ETA 13/0879 & 13/0880

Client:

Job Title:

Products	Protecta FR Acrylic
Application	Fire stopping of plastic pipes in flexible walls
Construction	Minimum wall thickness of 75 mm and comprise steel studs or timber studs* lined on both faces with minimum 1 layer of 12.5 mm thick boards.

Fire & Sound classification

PE, ABS & SAN+PVC pipes ≤ Ø32mm with wall thickness 2.0 – 3.0mm EI 30 U/C & E 30 U/C

PP pipes ≤ Ø32mm with wall thickness 2.3 – 4.4mm EI 30 U/C & E 30 U/C

PVC-U & PVC-C pipe Ø6mm with wall thickness 1.0mm EI 45 U/C & E 60 U/C

Sound reduction (seal only) 62dB

Polyseam Ltd, 15 St Andrews Road, Huddersfield, West Yorkshire, HD1 6SB
Tel: +44 (0) 148 4421036
Email: post.uk@polyseam.com

For all technical details on the products specified please refer to the technical data sheets that can be found on www.protecta.eu

Signed and approved:

Sheet size: **A4**	Drawn date & no: 8/4/18
Scale: **NTS**	Drawn by: K.B

Installation Instructions

1. Before installing Protecta® FR Acrylic ensure that the surface of all service penetrations and surrounding construction is free from all loose contaminants, dust and grease.
2. Where Protecta® FR Acrylic is to be installed against surfaces that cannot tolerate direct contact; appropriate surface preparation should be made (contact Polyseam for guidance in these cases). For paints sensitive to sealing compounds, priming with a PVA primer is recommended.
3. When installing the sealant in gypsum boards, the exposed edges of the board can be wetted with water, or Protecta® FR Acrylic diluted with water to prime the surfaces helping adhesion and preventing excessive joint shrinkage.
4. When installing any backing material, cut this slightly oversize and insert into the gap ensuring a tight friction fit. Ensure correct depth is achieved.
5. Fill the gap or joint with Protecta® FR Acrylic to the required depth.
6. Apply the sealant generously to prevent air bubbles. Finish the bead with a moist spatula, pallet knife or brush.
7. Protecta® FR Acrylic can be over-painted with most emulsion or alkyd (gloss) paints.

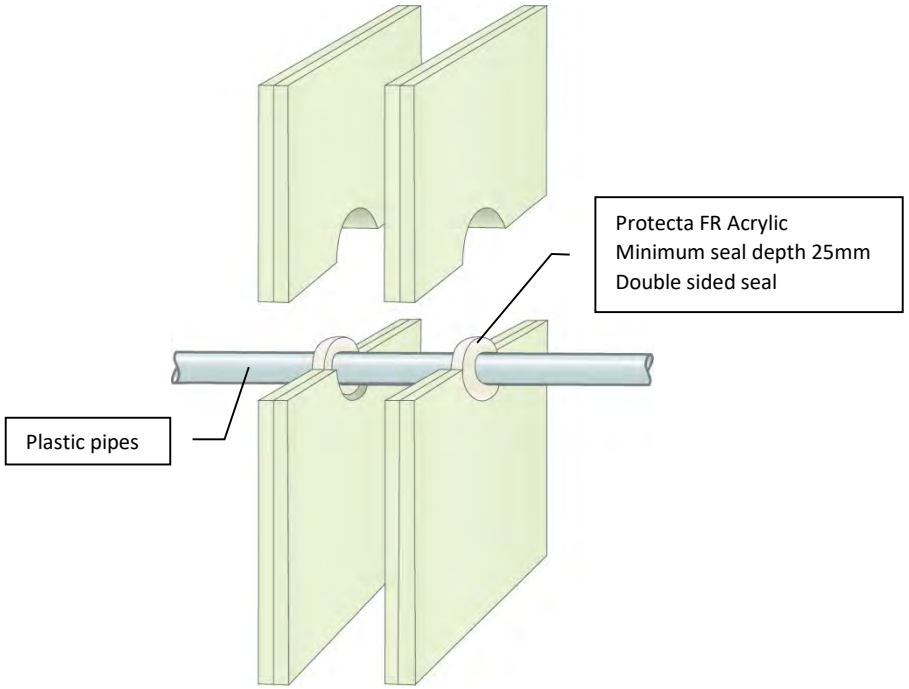

Client:

Job Title:

Products	Protecta FR Acrylic
Application	Fire stopping of plastic pipes in flexible walls
Construction	Minimum wall thickness of 100 mm and comprise steel studs or timber studs* lined on both faces with minimum 2 layers of 12.5 mm thick boards.

Fire & Sound classification

PVC-U & PVC-C pipes ≤ Ø32mm with wall thickness 1.0-2.4mm in maximum aperture pipe Ø + 20mm **EI 120 U/C & E 120 U/C**

PVC-U & PVC-C pipes ≤ Ø32mm with wall thickness 1.0-2.4mm in maximum aperture pipe Ø + 60mm **EI 90 U/C & E 120 U/C**

PE, ABS & SAN+PVC pipe Ø20mm with wall thickness 2.0mm in maximum aperture pipe Ø + 60mm **EI 120 U/C & E 120 U/C**

PP pipe Ø20mm with wall thickness 2.2mm in maximum aperture pipe Ø + 60mm **EI 120 U/C & E 120 U/C**

PP pipes ≤ Ø32mm with wall thickness 2.0-4.4mm in maximum aperture pipe Ø + 60mm **EI 60 U/C & E 60 U/C**

Sound reduction (seal only) **62dB**

ETA 13/0879 & 13/0880

Polyseam Ltd, 15 St Andrews Road, Huddersfield, West Yorkshire, HD1 6SB
Tel: +44 (0) 148 4421036
Email: post.uk@polyseam.com

For all technical details on the products specified please refer to the technical data sheets that can be found on www.protecta.eu

Signed and approved:

Sheet size:	Drawn date & no:
A4	8/4/18
NTS	KB

Installation Instructions

1. Before installing Protecta® FR Acrylic ensure that the surface of all service penetrations and surrounding construction is free from all loose contaminants, dust and grease.
2. Where Protecta® FR Acrylic is to be installed against surfaces that cannot tolerate direct contact; appropriate surface preparation should be made (contact Polyseam for guidance in these cases). For paints sensitive to sealing compounds, priming with a PVA primer is recommended.
3. When installing the sealant in gypsum boards, the exposed edges of the board can be wetted with water, or Protecta® FR Acrylic diluted with water to prime the surfaces helping adhesion and preventing excessive joint shrinkage.
4. When installing any backing material, cut this slightly oversize and insert into the gap ensuring a tight friction fit. Ensure correct depth is achieved.
5. Fill the gap or joint with Protecta® FR Acrylic to the required depth.
6. Apply the sealant generously to prevent air bubbles. Finish the bead with a moist spatula, pallet knife or brush.
7. Protecta® FR Acrylic can be over-painted with most emulsion or alkyd (gloss) paints.

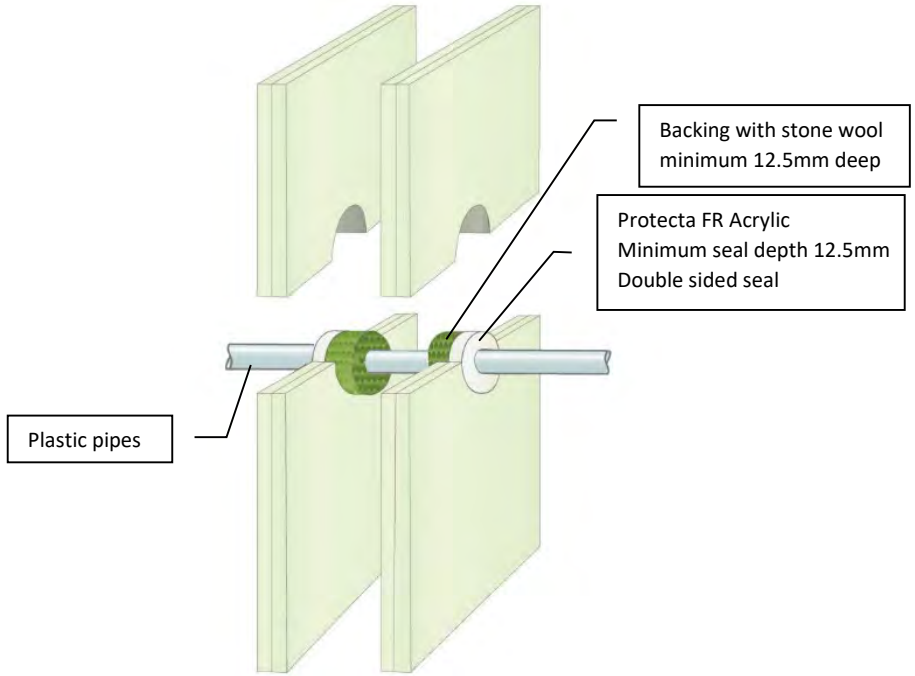

ETA 13/0879 & 13/0880

As a part of our policy of on-going product development and testing, we reserve the right to modify, alter or change product specifications without giving notice. All information contained in this document is given in good faith and is provided for guidance only. Any drawings provided are for illustrative purposes only. As Polyseam has no control over the methods or competence of installation and of prevailing site conditions, no warranties, expressed or implied, is intended to be given as to the actual performance of the product mentioned or referred to herein and no liability whatsoever will be accepted for any loss, damage or injury arising from the use of the information given.

For all technical details on the products specified please refer to the technical data sheets that can be found on www.protecta.eu

Signed and approved:

Client:

Job Title:

Products	Protecta FR Acrylic
Application	Fire stopping of plastic pipes in flexible walls
Construction	Minimum wall thickness of 100 mm and comprise steel studs or timber studs* lined on both faces with minimum 2 layers of 12.5 mm thick boards.

Fire & Sound classification

PEX pipe-in-pipe ≤ Ø25mm in maximum aperture Ø85mm

EI 120 C/C & E 120 C/C

Sound reduction (seal only) 62dB

Protecta®

Polyseam Ltd, 15 St Andrews Road, Huddersfield, West Yorkshire, HD1 6SB
Tel: +44 (0) 148 4421036
Email: post.uk@polyseam.com

Sheet size: **A4**	Drawn date & no: 23/4/15
Scale: **NTS**	Drawn by: K.B

Installation Instructions

1. Before installing Protecta® FR Graphite ensure that the surface of all service penetrations and surrounding construction is free from all loose contaminants, dust and grease.
2. When installing any backing material, cut this slightly oversize and insert into the gap ensuring a tight friction fit. Ensure correct depth is achieved.
3. Fill the gap or joint with Protecta® FR Graphite to the required depth.
4. Apply the sealant generously avoiding air bubbles. Finish the bead with a moist spatula or pallet knife. Avoid excessive tooling/smoothing as this may make the seal surface wet and soft.
5. Protecta® FR Graphite can be over-painted with most emulsion or alkyd (gloss) paints.

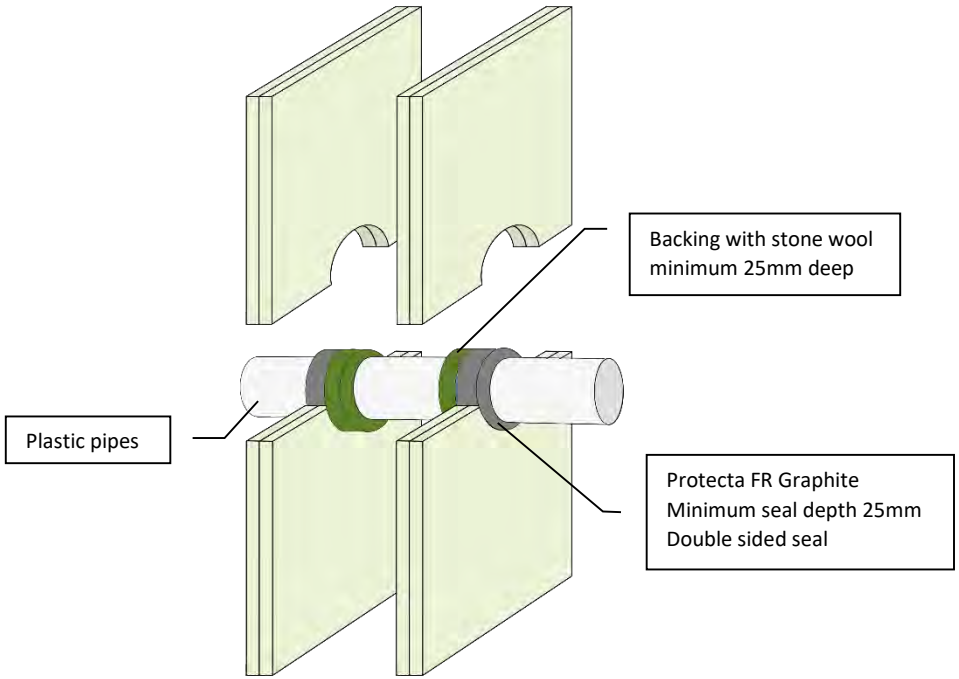

ETA 18/0626

As a part of our policy of on-going product development and testing, we reserve the right to modify, alter or change product specifications without giving notice. All information contained in this document is given in good faith and is provided for guidance only. Any drawings provided are for illustrative purposes only. As Polyseam has no control over the methods or competence of installation and of prevailing site conditions, no warranties, expressed or implied, is intended to be given as to the actual performance of the product mentioned or referred to herein and no liability whatsoever will be accepted for any loss, damage or injury arising from the use of the information given.

For all technical details on the products specified please refer to the technical data sheets that can be found on www.protecta.eu

Signed and approved:

Client:

Job Title:

Products	Protecta FR Graphite Stone wool
Application	Fire stopping of plastic pipes in insulated flexible walls
Construction	Minimum wall thickness of 100 mm and comprise steel studs or timber studs* lined on both faces with minimum 2 layers of 12.5 mm thick boards

Fire & Sound classification

PVC-U and PVC-C pipe ≤ 110 mm diameter with wall thickness 1.9-6.6mm in seal widths between 10 and 30mm EI 120 U/C

PE, ABS and SAN+PVC pipe ≤ 40 mm diameter with wall thickness 2.4-3.7mm in seal widths between 10 and 30mm EI 120 U/C

PE, ABS and SAN+PVC pipe ≤ 110 mm diameter with wall thickness 2.4-4.2mm in seal widths between 10 and 30mm EI 60 U/C

PE, ABS and SAN+PVC pipe ≤ 110 mm diameter with wall thickness 4.3-10.0mm in seal widths between 10 and 30mm EI 90 U/C & E 120 U/C

Sound reduction (seal only) Rw 53dB

Polyseam Ltd, 15 St Andrews Road, Huddersfield, West Yorkshire, HD1 6SB
Tel: +44 (0) 148 4421036
Email: post.uk@polyseam.com

Sheet size: **A4**	Drawn date & no: 11/11/18
Scale: **NTS**	Drawn by: K.B

Installation Instructions

1. Before installing Protecta® FR Graphite ensure that the surface of all service penetrations and surrounding construction is free from all loose contaminants, dust and grease.
2. When installing any backing material, cut this slightly oversize and insert into the gap ensuring a tight friction fit. Ensure correct depth is achieved.
3. Fill the gap or joint with Protecta® FR Graphite to the required depth.
4. Apply the sealant generously avoiding air bubbles. Finish the bead with a moist spatula or pallet knife. Avoid excessive tooling/smoothing as this may make the seal surface wet and soft.
5. Protecta® FR Graphite can be over-painted with most emulsion or alkyd (gloss) paints.

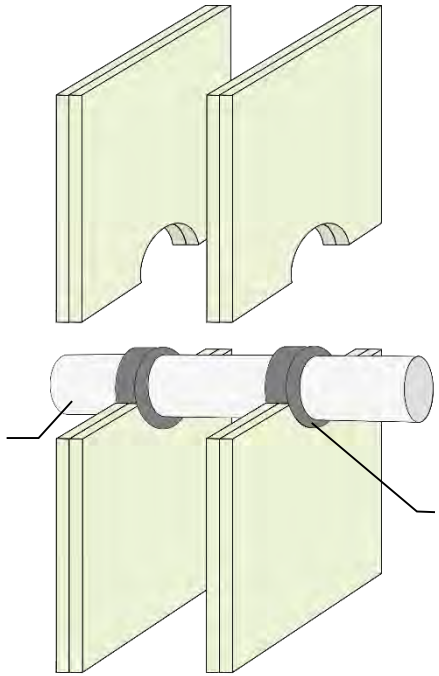

ETA 18/0626

As a part of our policy of on-going product development and testing, we reserve the right to modify, alter or change product specifications without giving notice. All information contained in this document is given in good faith and is provided for guidance only. Any drawings provided are for illustrative purposes only. As Polyseam has no control over the methods or competence of installation and of prevailing site conditions, no warranties, expressed or implied, is intended to be given as to the actual performance of the product mentioned or referred to herein and no liability whatsoever will be accepted for any loss, damage or injury arising from the use of the information given.

For all technical details on the products specified please refer to the technical data sheets that can be found on www.protecta.eu

Signed and approved:

Client:

Job Title:

Products	Protecta FR Graphite Stone wool
Application	Fire stopping of plastic pipes in flexible walls
Construction	Minimum wall thickness of 100 mm and comprise steel studs or timber studs* lined on both faces with minimum 2 layers of 12.5 mm thick boards

Fire & Sound classification

PVC-U and PVC-C pipe ≤ 160 mm diameter with wall thickness 3.2-9.5mm in seal widths between 10 and 30mm EI 30 U/C

PVC-U and PVC-C pipe ≤ 160 mm diameter with wall thickness 9.5mm in seal widths between 10 and 30mm EI 90 U/C

PP pipe ≤ 110 mm diameter with wall thickness 1.8-6.3mm in seal widths between 10 and 30mm EI 60 U/C

Sound reduction (seal only) Rw 53dB

Polyseam Ltd, 15 St Andrews Road, Huddersfield, West Yorkshire, HD1 6SB
Tel: +44 (0) 148 4421036
Email: post.uk@polyseam.com

Sheet size: **A4**	Drawn date & no: 11/11/18
Scale: **NTS**	Drawn by: K.B

Installation Instructions

1. For sealing plastic pipes, a pipe collar is installed on both sides of the wall.
2. Before fitting the pipe collar ensure that the gaps between the pipe and the separating element are sealed.
3. Place a pipe collar around the service penetration (pipe) and ensure that the fixing lugs are positioned tightly to the surface of the wall so that the anchors/fixings can be inserted fully.
4. Where the surface is uneven, apply a sealing bead of Protecta® FR Acrylic between the wall and the pipe collar.
5. Attach the pipe collar with steel screws, anchors or fixings that are suitable for the substrate that the pipe collar will be fitted to. Use ≥ Ø4 mm gypsum-, wood screws or anchors with a length suitable for the number of boards that form the wall.
6. On site where the penetration size is greater than the pipe diameter and/or the pipe is in an angle an oversized collar can be used. Protecta® FR Collars are tested 'oversize', i.e. the internal diameter of the collar can be larger than the pipe.

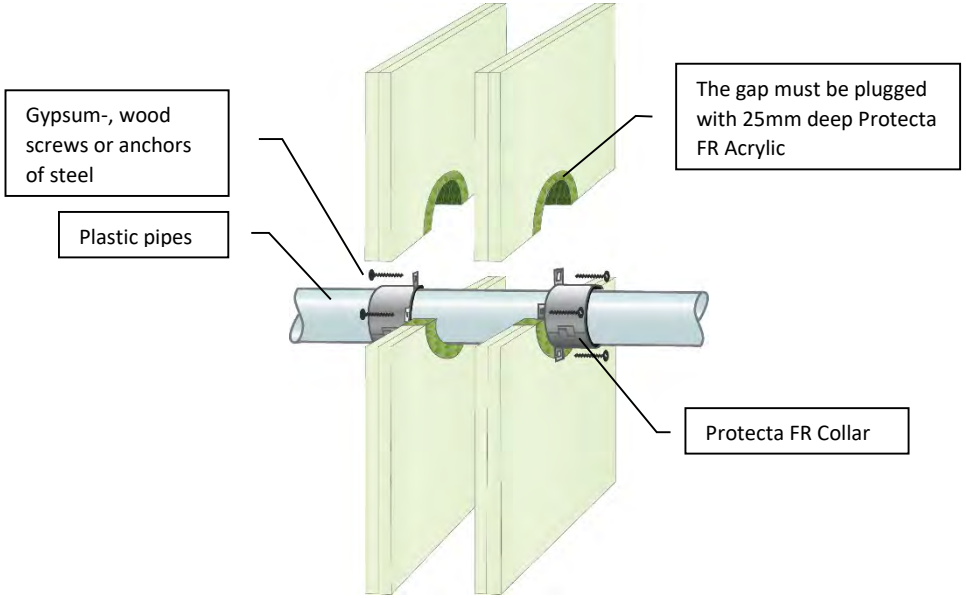

Services	Minimum Collar Height	Classification
≤ Ø50mm PVC-U & PVC-C	30mm	EI 60 C/C, EI 60 U/C, EI 60 C/U, EI 60 U/U
≤ Ø110mm PVC-U & PVC-C	30mm	EI 60 C/C, EI 60 U/C
≤ Ø110mm PVC-U & PVC-C	50mm	EI 60 C/C, EI 60 U/C, EI 60 C/U, EI 60 U/U
≤ Ø160mm PVC-U & PVC-C	60mm	EI 60 C/C, EI 60 U/C, EI 60 C/U, EI 60 U/U
Ø315x9.2mm PVC-U & PVC-C	75mm	EI 60 C/C
≤ Ø50mm PE, ABS & SAN+PVC	30mm	EI 60 C/C, EI 60 U/C, EI 45 C/U, EI 45 U/U
≤ Ø90mm PE, ABS & SAN+PVC	50mm	EI 60 C/C, EI 60 U/C, EI 45 C/U, EI 45 U/U
≤ Ø110mm PE, ABS & SAN+PVC	30mm	EI 60 C/C, EI 60 U/C
≤ Ø110mm PE, ABS & SAN+PVC	50mm	EI 60 C/C, EI 60 U/C, EI 60 C/U, EI 60 U/U
≤ Ø140mm PE, ABS & SAN+PVC	60mm	EI 60 C/C, EI 60 U/C, EI 60 C/U, EI 60 U/U
≤ Ø160mm PE, ABS & SAN+PVC	60mm	EI 90 C/C, EI 90 U/C, EI 90 C/U, EI 90 U/U
Ø200x18.2mm PE, ABS & SAN+PVC	75mm	EI 60 C/C
Ø250x22.7mm PE, ABS & SAN+PVC	75mm	EI 60 C/C
≤ Ø50mm PP	30mm	EI 60 C/C, EI 60 U/C, EI 60 C/U, EI 60 U/U
≤ Ø110mm PP	30mm	EI 60 C/C, EI 60 U/C
≤ Ø110mm PP	50mm	EI 60 C/C, EI 60 U/C, EI 60 C/U, EI 60 U/U
≤ Ø160mm PP	60mm	EI 60 C/C, EI 60 U/C, EI 60 C/U, EI 60 U/U

ETA 14/0249

Client:

Job Title:

Products Protecta FR Collar
Protecta FR Acrylic

Application Fire stopping of plastic pipes in flexible walls with gap widths of minimum 8mm

Construction Minimum wall thickness of 100 mm and comprise steel studs or timber studs* lined on both faces with minimum 2 layers of 12.5 mm thick boards

Fire & Sound classification

Fire classifications in table on the left.

Sound reduction (seal only) 58dB

Polyseam Ltd, 15 St Andrews Road, Huddersfield, West Yorkshire, HD1 6SB
Tel: +44 (0) 148 4421036
Email: post.uk@polyseam.com

For all technical details on the products specified please refer to the technical data sheets that can be found on www.protecta.eu

Signed and approved:

Sheet size:	Drawn date & no:
A4	24/5/18
Scale:	Drawn by:
NTS	K.B

Installation Instructions

1. Before installing Protecta® FR Acrylic ensure that the surface of all service penetrations and surrounding construction is free from all loose contaminants, dust and grease.
2. Where Protecta® FR Acrylic is to be installed against surfaces that cannot tolerate direct contact; appropriate surface preparation should be made (contact Polyseam for guidance in these cases). For paints sensitive to sealing compounds, priming with a PVA primer is recommended.
3. When installing the sealant in gypsum boards, the exposed edges of the board can be wetted with water, or Protecta® FR Acrylic diluted with water to prime the surfaces helping adhesion and preventing excessive joint shrinkage.
4. When installing any backing material, cut this slightly oversize and insert into the gap ensuring a tight friction fit. Ensure correct depth is achieved.
5. Fill the gap or joint with Protecta® FR Acrylic to the required depth.
6. Apply the sealant generously to prevent air bubbles. Finish the bead with a moist spatula, pallet knife or brush.
7. Protecta® FR Acrylic can be over-painted with most emulsion or alkyd (gloss) paints.

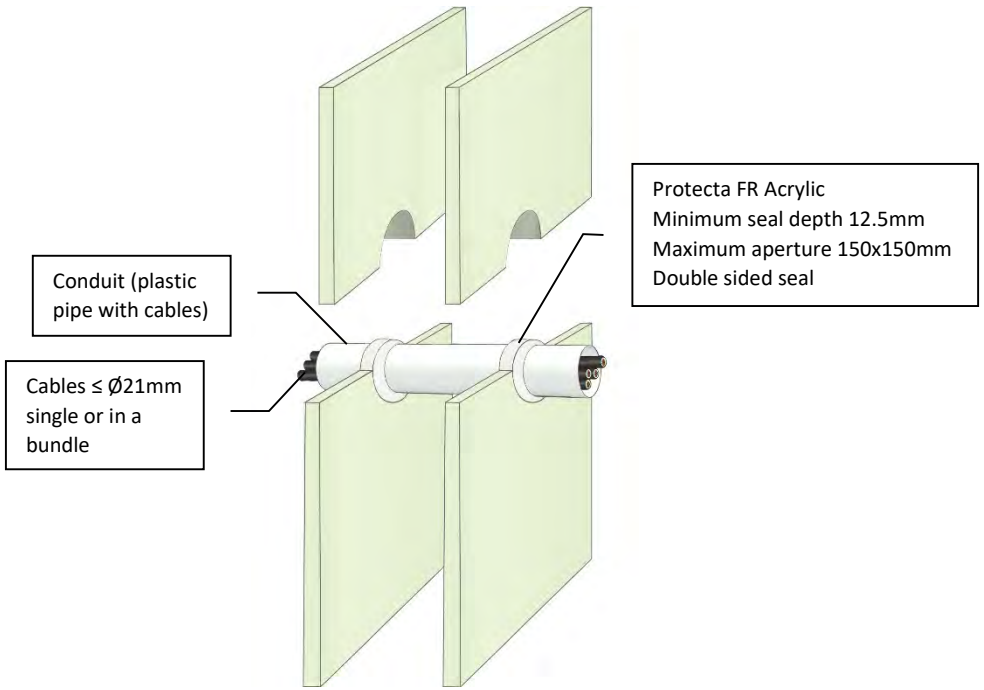

ETA 13/0879 & 13/0880

Client:

Job Title:

Products	Protecta FR Acrylic
Application	Fire stopping of conduits in flexible walls
Construction	Minimum wall thickness of 75 mm and comprise steel studs or timber studs* lined on both faces with minimum 1 layer of 12.5 mm thick boards.

Fire & Sound classification

PE, ABS & SAN+PVC conduits/pipes ≤ Ø32mm with wall thickness 2.0 – 3.0mm
EI 30 U/C & E 45 U/C

PP conduits/pipes ≤ Ø32mm with wall thickness 2.3 – 4.4mm EI 30 U/C & E 45 U/C

PVC-U & PVC-C conduits/pipes ≤ Ø32mm with wall thickness 1.0 – 1.8mm
EI 45 U/C & E 60 U/C

Sound reduction (seal only) 62dB

Polyseam Ltd, 15 St Andrews Road, Huddersfield, West Yorkshire, HD1 6SB
Tel: +44 (0) 148 4421036
Email: post.uk@polyseam.com

For all technical details on the products specified please refer to the technical data sheets that can be found on www.protecta.eu

Signed and approved:

Sheet size: **A4**	Drawn date & no: 8/4/18
Scale: **NTS**	Drawn by: K.B

Installation Instructions

1. Before installing Protecta® FR Graphite ensure that the surface of all service penetrations and surrounding construction is free from all loose contaminants, dust and grease.
2. When installing any backing material, cut this slightly oversize and insert into the gap ensuring a tight friction fit. Ensure correct depth is achieved.
3. Fill the gap or joint with Protecta® FR Graphite to the required depth.
4. Apply the sealant generously avoiding air bubbles. Finish the bead with a moist spatula or pallet knife. Avoid excessive tooling/smoothing as this may make the seal surface wet and soft.
5. Protecta® FR Graphite can be over-painted with most emulsion or alkyd (gloss) paints.

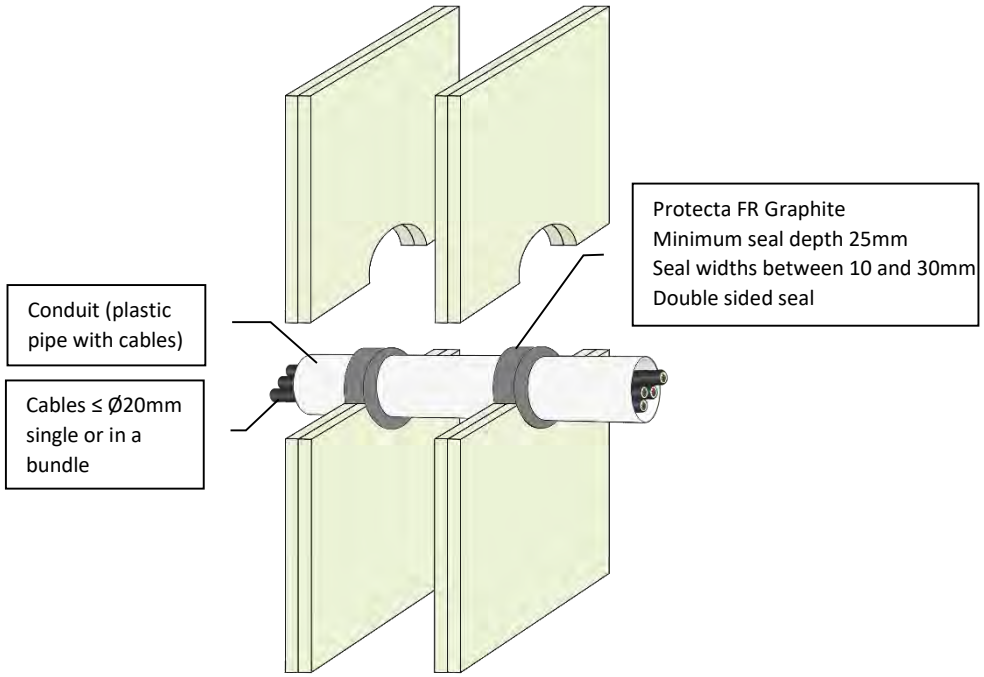

ETA 18/0626

As a part of our policy of on-going product development and testing, we reserve the right to modify, alter or change product specifications without giving notice. All information contained in this document is given in good faith and is provided for guidance only. Any drawings provided are for illustrative purposes only. As Polyseam has no control over the methods or competence of installation and of prevailing site conditions, no warranties, expressed or implied, is intended to be given as to the actual performance of the product mentioned or referred to herein and no liability whatsoever will be accepted for any loss, damage or injury arising from the use of the information given.

For all technical details on the products specified please refer to the technical data sheets that can be found on www.protecta.eu

Signed and approved:

Client:

Job Title:

Products	Protecta FR Graphite
Application	Fire stopping of conduits in flexible walls
Construction	Minimum wall thickness of 100 mm and comprise steel studs or timber studs* lined on both faces with minimum 2 layers of 12.5 mm thick boards.

Fire & Sound classification

PE, ABS & SAN+PVC conduits/pipes ≤ Ø110mm with wall thickness 2.4 - 10.0mm	EI 60 U/C
PP conduits/pipes ≤ Ø110mm with wall thickness 2.7 - 6.6mm	EI 90 U/C
PVC-U & PVC-C conduits/pipes ≤ Ø110mm with wall thickness 1.9 - 6.6mm	EI 90 U/C
Sound reduction (seal only)	Rw 53dB

Protecta®

Polyseam Ltd, 15 St Andrews Road, Huddersfield, West Yorkshire, HD1 6SB
Tel: +44 (0) 148 4421036
Email: post.uk@polyseam.com

Sheet size: **A4**	Drawn date & no: 11/11/18
Scale: **NTS**	Drawn by: K.B

Appendix IV

-

Service penetration solutions in larger apertures

Installation Instructions

1. Before installing Protecta® FR Board ensure that the surface of all service penetrations and surrounding construction is free from all loose contaminants, dust and grease.
2. The coated side of the board should be flush with the surface of the drywall on both sides.
3. Cut the required board(s) to suit the aperture dimensions and type and size of service penetration(s). All exposed and cut edges of the board can be sealed with Protecta® FR Coating or Protecta® FR Acrylic prior to fitting which will act as an adhesive and ensure a smoke tight seal.
4. All joints, gaps or imperfections in the installed seal must be filled with Protecta® FR Acrylic on both sides.
5. Protecta® FR Board can be over-painted with most emulsion or alkyd (gloss) paints.

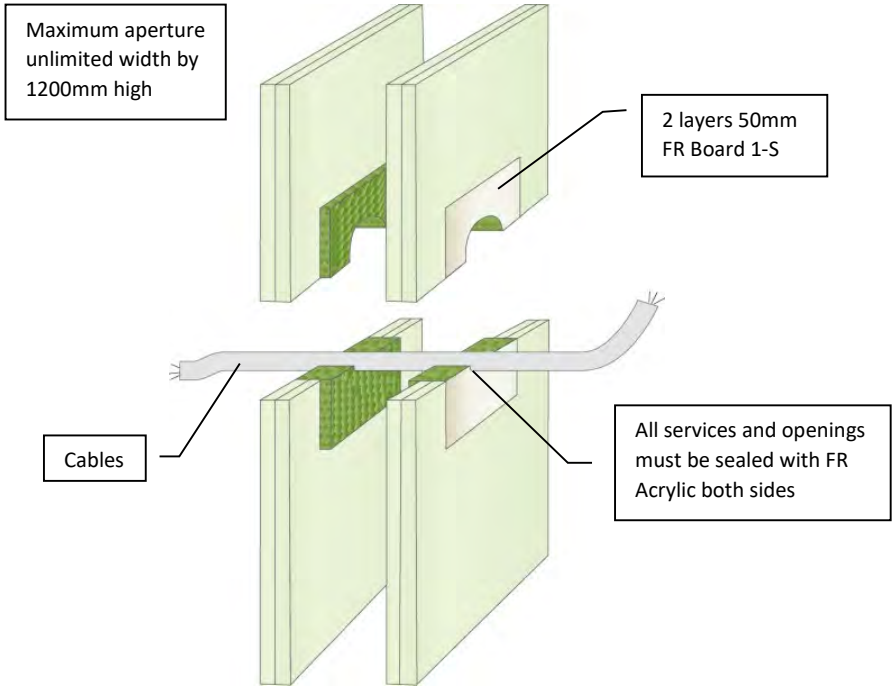

Minimum separations and limitations

An aperture can include several services, and they may also be different. The minimum permitted separation between adjacent seals/apertures is 200mm. Services should be a minimum of 25mm from seal edges. Services within the system Protecta® FR Board seal do not require a minimum separation, except pipes where pipe insulation penetrates the seal and plastic pipe penetrations which should be a minimum of 30 mm from other services in the aperture. The total amount of cross sections of services (including insulation) should not exceed 60% of the penetration area.

ETA 13/0673 & 18/0855

For all technical details on the products specified please refer to the technical data sheets that can be found on www.protecta.eu

Signed and approved:

Client:

Job Title:

Products	Protecta FR Board Protecta FR Acrylic
Application	Fire stopping of cables in flexible walls
Construction	Minimum wall thickness of 100 mm and comprise steel studs or timber studs* lined on both faces with minimum 2 layers of 12.5 mm thick boards.

Fire & Sound classification

Cables ≤ Ø21mm — EI 60 & E 120

Sound reduction (seal only) — 52 dB

Polyseam Ltd, 15 St Andrews Road, Huddersfield, West Yorkshire, HD1 6SB
Tel: +44 (0) 148 4421036
Email: post.uk@polyseam.com

Sheet size: **A4**	Drawn date & no: 20/4/15
Scale: **NTS**	Drawn by: K.B

Installation Instructions

1. Before installing Protecta® FR Board ensure that the surface of all service penetrations and surrounding construction is free from all loose contaminants, dust and grease.
2. The coated side of the board should be flush with the surface of the drywall on both sides.
3. Cut the required board(s) to suit the aperture dimensions and type and size of service penetration(s). All exposed and cut edges of the board can be sealed with Protecta® FR Coating or Protecta® FR Acrylic prior to fitting which will act as an adhesive and ensure a smoke tight seal.
4. All joints, gaps or imperfections in the installed seal must be filled with Protecta® FR Acrylic on both sides.
5. Protecta® FR Board can be over-painted with most emulsion or alkyd (gloss) paints.

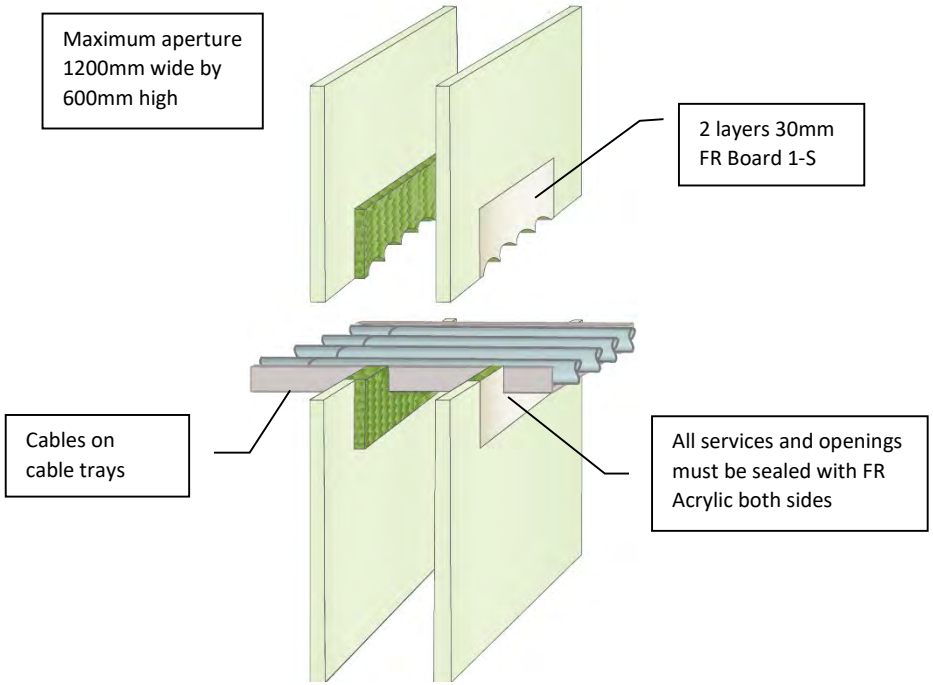

Minimum separations and limitations

An aperture can include several services, and they may also be different. The minimum permitted separation between adjacent seals/apertures is 200mm. Services should be a minimum of 25mm from seal edges. Services within the system Protecta® FR Board seal do not require a minimum separation, except pipes where pipe insulation penetrates the seal and plastic pipe penetrations which should be a minimum of 30 mm from other services in the aperture. The total amount of cross sections of services (including insulation) should not exceed 60% of the penetration area.

ETA 13/0673 & 18/0855

For all technical details on the products specified please refer to the technical data sheets that can be found on www.protecta.eu

Signed and approved:

Client:

Job Title:

Products	Protecta FR Board Protecta FR Acrylic
Application	Fire stopping of cables on cable trays in flexible walls
Construction	Minimum wall thickness of 75 mm and comprise steel studs or timber studs* lined on both faces with minimum 1 layer of 12.5 mm thick boards

Fire & Sound classification

Cables ≤ Ø21mm single or bundled on trays
EI 45 & E 45

Cables ≤ Ø80mm single or bundled on trays
EI 30 & E 45

Sound reduction (seal only)
52 dB

Polyseam Ltd, 15 St Andrews Road, Huddersfield, West Yorkshire, HD1 6SB
Tel: +44 (0) 148 4421036
Email: post.uk@polyseam.com

Sheet size: **A4**	Drawn date & no: 26/7/17
Scale: **NTS**	Drawn by: K.B

Installation Instructions

1. Before installing Protecta® FR Board ensure that the surface of all service penetrations and surrounding construction is free from all loose contaminants, dust and grease.
2. The board can be positioned to either side of the construction or anywhere in between.
3. Cut the required board(s) to suit the aperture dimensions and type and size of service penetration(s). All exposed and cut edges of the board can be sealed with Protecta® FR Coating or Protecta® FR Acrylic prior to fitting which will act as an adhesive and ensure a smoke tight seal.
4. All joints, gaps or imperfections in the installed seal must be filled with Protecta® FR Acrylic on both sides.
5. All cables and cable trays must be coated 150mm each side with 300µ WFT Protecta Service Coat FR-1.
6. Protecta® FR Board can be over-painted with most emulsion or alkyd (gloss) paints.

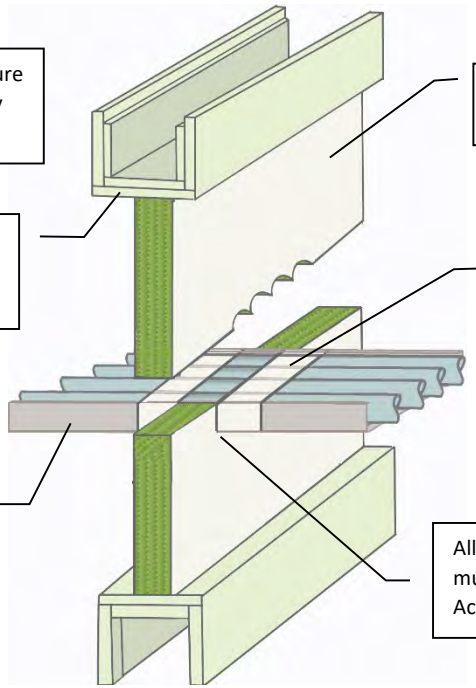

Minimum separations and limitations

An aperture can include several services, and they may also be different. The minimum permitted separation between adjacent seals/apertures is 200mm. Services should be a minimum of 25mm from seal edges. Services within the system Protecta® FR Board seal do not require a minimum separation, except pipes where pipe insulation penetrates the seal and plastic pipe penetrations which should be a minimum of 30 mm from other services in the aperture. The total amount of cross sections of services (including insulation) should not exceed 60% of the penetration area.

ETA 13/0673 & 18/0855

Client:

Job Title:

Products	Protecta FR Board Protecta FR Acrylic Protecta FR ServiceCoat FR-1
Application	Fire stopping of cables on cable trays in flexible walls
Construction	Minimum wall thickness of 100 mm and comprise steel studs or timber studs* lined on both faces with minimum 2 layers of 12.5 mm thick boards

Fire & Sound classification

Cables ≤ Ø80mm single or bundled on perforated cable trays and ladders
EI 60 & E 60

Sound reduction (seal only)
29 dB

Polyseam Ltd, 15 St Andrews Road, Huddersfield, West Yorkshire, HD1 6SB
Tel: +44 (0) 148 4421036
Email: post.uk@polyseam.com

For all technical details on the products specified please refer to the technical data sheets that can be found on www.protecta.eu

Signed and approved:

Sheet size: **A4**	Drawn date & no: 26/7/17
Scale: **NTS**	Drawn by: K.B

Installation Instructions

1. Before installing Protecta® FR Board ensure that the surface of all service penetrations and surrounding construction is free from all loose contaminants, dust and grease.
2. The coated side of the board should be flush with the surface of the drywall on both sides.
3. Cut the required board(s) to suit the aperture dimensions and type and size of service penetration(s). All exposed and cut edges of the board can be sealed with Protecta® FR Coating or Protecta® FR Acrylic prior to fitting which will act as an adhesive and ensure a smoke tight seal.
4. All joints, gaps or imperfections in the installed seal must be filled with Protecta® FR Acrylic on both sides.
5. Protecta® FR Board can be over-painted with most emulsion or alkyd (gloss) paints.

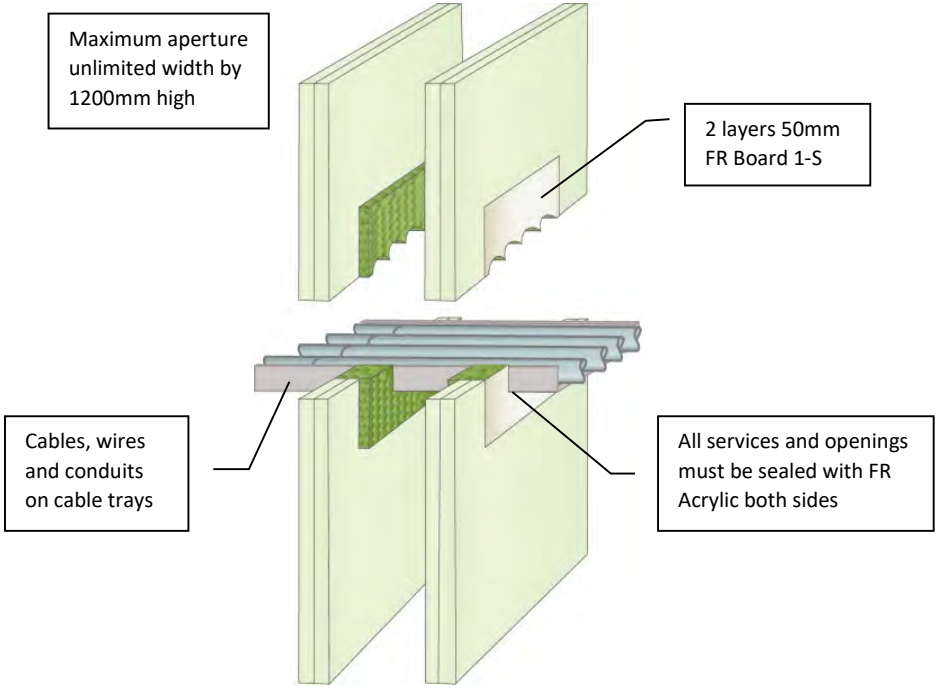

Minimum separations and limitations

An aperture can include several services, and they may also be different. The minimum permitted separation between adjacent seals/apertures is 200mm. Services should be a minimum of 25mm from seal edges. Services within the system Protecta® FR Board seal do not require a minimum separation, except pipes where pipe insulation penetrates the seal and plastic pipe penetrations which should be a minimum of 30 mm from other services in the aperture. The total amount of cross sections of services (including insulation) should not exceed 60% of the penetration area.

ETA 13/0673 & 18/0855

For all technical details on the products specified please refer to the technical data sheets that can be found on www.protecta.eu

Signed and approved:

Client:

Job Title:

Products	Protecta FR Board Protecta FR Acrylic
Application	Fire stopping of cables, wires and conduits on cable trays in flexible walls
Construction	Minimum wall thickness of 100 mm and comprise steel studs or timber studs* lined on both faces with minimum 2 layers of 12.5 mm thick boards.

Fire & Sound classification

Cables ≤ Ø80mm single or bundled, wires 185mm^2 and steel or PVC conduits ≤ Ø16mm on trays

EI 60 & E 60

Sound reduction (seal only)

52 dB

Polyseam Ltd, 15 St Andrews Road, Huddersfield, West Yorkshire, HD1 6SB
Tel: +44 (0) 148 4421036
Email: post.uk@polyseam.com

Sheet size: **A4**	Drawn date & no: 20/4/15
Scale: **NTS**	Drawn by: K.B

Installation Instructions

1. Before installing Protecta® FR Board ensure that the surface of all service penetrations and surrounding construction is free from all loose contaminants, dust and grease.
2. Protecta® FR Coating and Protecta® FR Acrylic are water based, so in cases where corrosion protection is a problem, some metals may require a barrier between the seal and the surface prior to this installation.
3. The coated side of the board should be flush with the surface of the drywall on both sides.
4. Cut the required board(s) to suit the aperture dimensions and type and size of service penetration(s). All exposed and cut edges of the board can be sealed with Protecta® FR Coating or Protecta® FR Acrylic prior to fitting which will act as an adhesive and ensure a smoke tight seal.
5. All joints, gaps or imperfections in the installed seal must be filled with Protecta® FR Acrylic on both sides.
6. Protecta® FR Board can be over-painted with most emulsion or alkyd (gloss) paints.

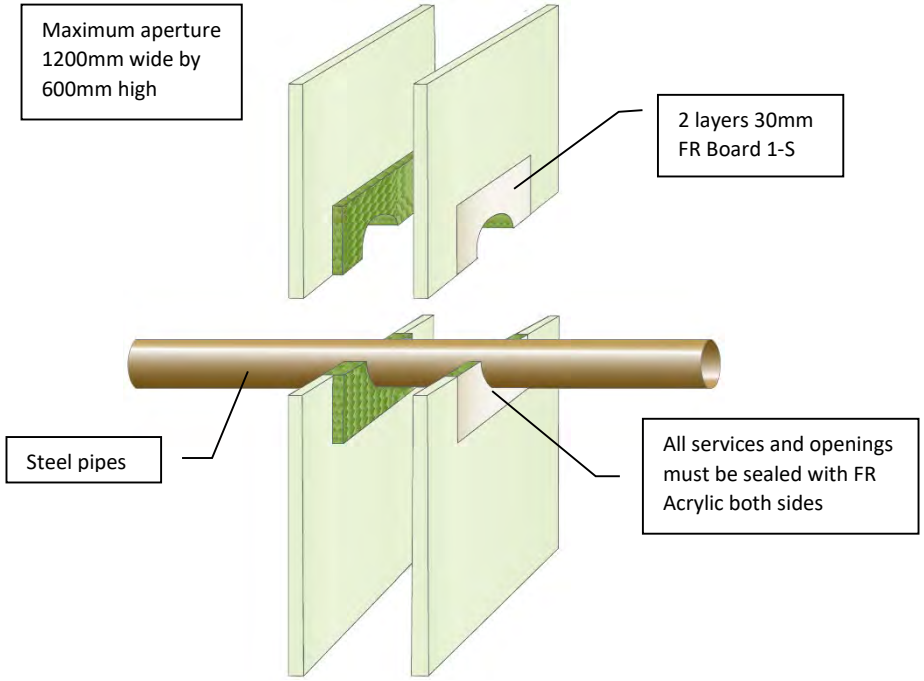

Minimum separations and limitations

An aperture can include several services, and they may also be different. The minimum permitted separation between adjacent seals/apertures is 200mm. Services should be a minimum of 25mm from seal edges. Services within the system Protecta® FR Board seal do not require a minimum separation, except pipes where pipe insulation penetrates the seal and plastic pipe penetrations which should be a minimum of 30 mm from other services in the aperture. The total amount of cross sections of services (including insulation) should not exceed 60% of the penetration area.

ETA 13/0673 & 18/0855

For all technical details on the products specified please refer to the technical data sheets that can be found on www.protecta.eu

Signed and approved:

Client:

Job Title:

Products	Protecta FR Board Protecta FR Acrylic
Application	Fire stopping of un-insulated steel pipes in flexible walls
Construction	Minimum wall thickness of 75 mm and comprise steel studs or timber studs* lined on both faces with minimum 1 layer of 12.5 mm thick boards.

Fire & Sound classification

Steel pipes ≤ Ø22mm
EI 30 C/U & E 45 C/U

Sound reduction (seal only)
52 dB

Polyseam Ltd, 15 St Andrews Road, Huddersfield, West Yorkshire, HD1 6SB
Tel: +44 (0) 148 4421036
Email: post.uk@polyseam.com

Sheet size: **A4**	Drawn date & no: 26/7/17
Scale: **NTS**	Drawn by: K.B

Installation Instructions

1. Before installing Protecta® FR Board ensure that the surface of all service penetrations and surrounding construction is free from all loose contaminants, dust and grease.
2. Protecta® FR Coating and Protecta® FR Acrylic are water based, so in cases where corrosion protection is a problem, some metals may require a barrier between the seal and the surface prior to this installation.
3. The coated side of the board should be flush with the surface of the drywall on both sides.
4. Cut the required board(s) to suit the aperture dimensions and type and size of service penetration(s). All exposed and cut edges of the board can be sealed with Protecta® FR Coating or Protecta® FR Acrylic prior to fitting which will act as an adhesive and ensure a smoke tight seal.
5. All joints, gaps or imperfections in the installed seal must be filled with Protecta® FR Acrylic on both sides.
6. Protecta® FR Board can be over-painted with most emulsion or alkyd (gloss) paints.

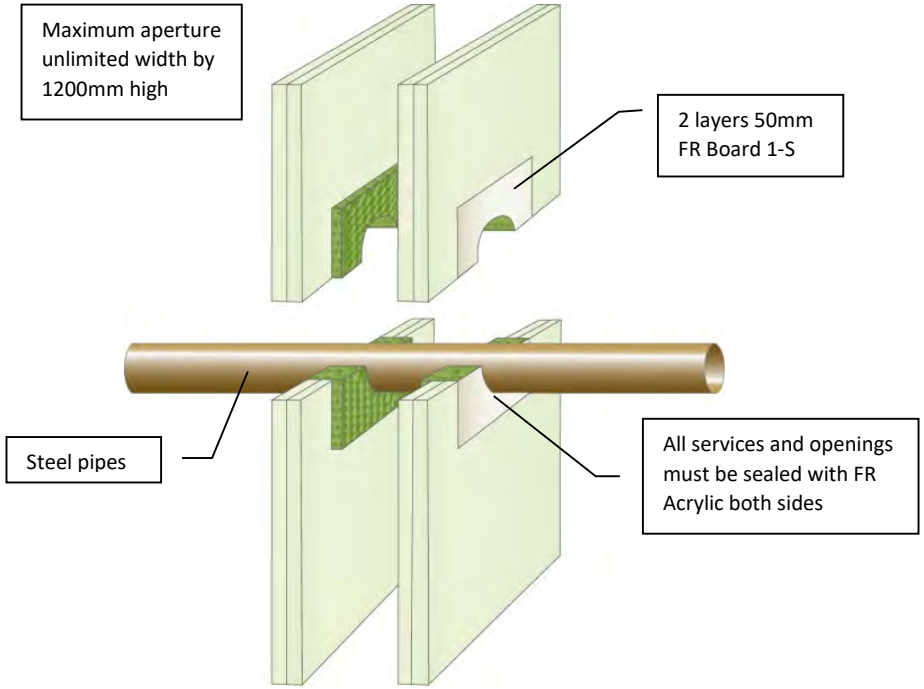

Minimum separations and limitations

An aperture can include several services, and they may also be different. The minimum permitted separation between adjacent seals/apertures is 200mm. Services should be a minimum of 25mm from seal edges. Services within the system Protecta® FR Board seal do not require a minimum separation, except pipes where pipe insulation penetrates the seal and plastic pipe penetrations which should be a minimum of 30 mm from other services in the aperture. The total amount of cross sections of services (including insulation) should not exceed 60% of the penetration area.

ETA 13/0673 & 18/0855

For all technical details on the products specified please refer to the technical data sheets that can be found on www.protecta.eu

Signed and approved:

Client:

Job Title:

Products	Protecta FR Board Protecta FR Acrylic
Application	Fire stopping of un-insulated steel pipes in flexible walls
Construction	Minimum wall thickness of 100 mm and comprise steel studs or timber studs* lined on both faces with minimum 2 layers of 12.5 mm thick boards.

Fire & Sound classification

Steel pipes ≤ Ø22mm
EI 60 C/U & E 120 C/U

Steel pipes ≤ Ø114mm
EI 20 C/U & E 90 C/U

Sound reduction (seal only)
52 dB

Polyseam Ltd, 15 St Andrews Road, Huddersfield, West Yorkshire, HD1 6SB
Tel: +44 (0) 148 4421036
Email: post.uk@polyseam.com

Sheet size: **A4**	Drawn date & no: 26/7/17
Scale: **NTS**	Drawn by: K.B

Installation Instructions

1. Before installing Protecta® FR Board ensure that the surface of all service penetrations and surrounding construction is free from all loose contaminants, dust and grease.
2. The coated side of the board should be flush with the surface of the drywall on both sides.
3. Cut the required board(s) to suit the aperture dimensions and type and size of service penetration(s). All exposed and cut edges of the board can be sealed with Protecta® FR Coating or Protecta® FR Acrylic prior to fitting which will act as an adhesive and ensure a smoke tight seal.
4. All joints, gaps or imperfections in the installed seal must be filled with Protecta® FR Acrylic on both sides.
5. Protecta® FR Board can be over-painted with most emulsion or alkyd (gloss) paints.

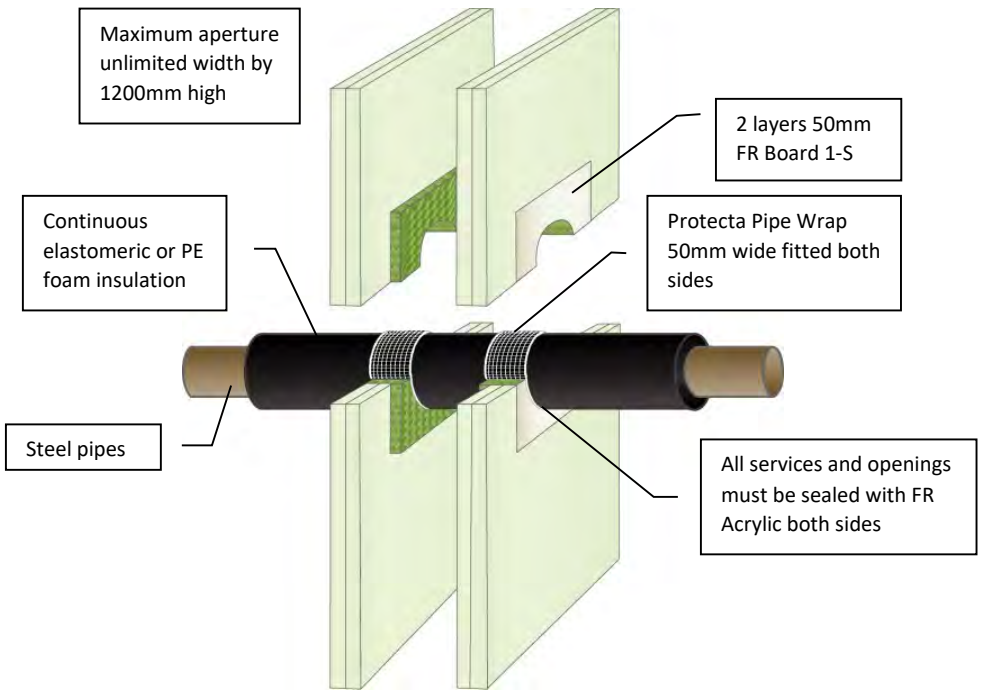

Minimum separations and limitations

An aperture can include several services, and they may also be different. The minimum permitted separation between adjacent seals/apertures is 200mm. Services should be a minimum of 25mm from seal edges. Services within the system Protecta® FR Board seal do not require a minimum separation, except pipes where pipe insulation penetrates the seal and plastic pipe penetrations which should be a minimum of 30 mm from other services in the aperture. The total amount of cross sections of services (including insulation) should not exceed 60% of the penetration area.

ETA 13/0673 & 18/0855

As a part of our policy of on-going product development and testing, we reserve the right to modify, alter or change product specifications without giving notice. All information contained in this document is given in good faith and is provided for guidance only. Any drawings provided are for illustrative purposes only. As Polyseam has no control over the methods or competence of installation and of prevailing site conditions, no warranties, expressed or implied, is intended to be given as to the actual performance of the product mentioned or referred to herein and no liability whatsoever will be accepted for any loss, damage or injury arising from the use of the information given.

For all technical details on the products specified please refer to the technical data sheets that can be found on www.protecta.eu

Signed and approved:

Client:

Job Title:

Products	Protecta FR Board Protecta FR Acrylic Protecta FR Pipe Wrap 25m
Application	Fire stopping of insulated steel pipes in flexible walls
Construction	Minimum wall thickness of 100 mm and comprise steel studs or timber studs* lined on both faces with minimum 2 layers of 12.5 mm thick boards.

Fire & Sound classification

Steel pipes ≤ Ø40mm with 13mm continuous foam insulation and 2 layers of pipe wrap
EI 120 U/U & E 120 U/U

Steel pipes ≤ Ø165mm with 13 - 32mm continuous foam insulation and 2 layers of pipe wrap
EI 60 U/U & E 120 U/U

Steel pipes ≤ Ø324mm with 32 - 50mm continuous foam insulation and 3 layers of pipe wrap
EI 90 C/U & E 90 C/U

Sound reduction (seal only) 52 dB

Protecta®

Polyseam Ltd, 15 St Andrews Road, Huddersfield, West Yorkshire, HD1 6SB
Tel: +44 (0) 148 4421036
Email: post.uk@polyseam.com

Sheet size: **A4**	Drawn date & no: 5/3/19
Scale: **NTS**	Drawn by: K.B

Installation Instructions

1. Before installing Protecta® FR Board ensure that the surface of all service penetrations and surrounding construction is free from all loose contaminants, dust and grease.
2. The coated side of the board should be flush with the surface of the drywall on both sides.
3. Cut the required board(s) to suit the aperture dimensions and type and size of service penetration(s). All exposed and cut edges of the board can be sealed with Protecta® FR Coating or Protecta® FR Acrylic prior to fitting which will act as an adhesive and ensure a smoke tight seal.
4. All joints, gaps or imperfections in the installed seal must be filled with Protecta® FR Acrylic on both sides.
5. Protecta® FR Board can be over-painted with most emulsion or alkyd (gloss) paints.

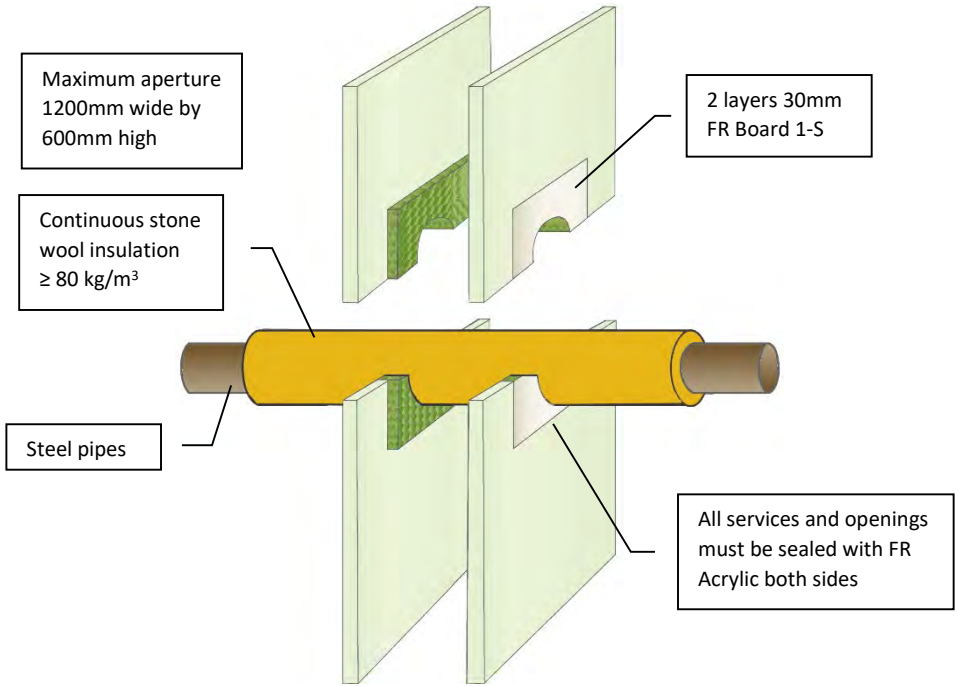

Minimum separations and limitations

An aperture can include several services, and they may also be different. The minimum permitted separation between adjacent seals/apertures is 200mm. Services should be a minimum of 25mm from seal edges. Services within the system Protecta® FR Board seal do not require a minimum separation, except pipes where pipe insulation penetrates the seal and plastic pipe penetrations which should be a minimum of 30 mm from other services in the aperture. The total amount of cross sections of services (including insulation) should not exceed 60% of the penetration area.

ETA 13/0673 & 18/0855

For all technical details on the products specified please refer to the technical data sheets that can be found on www.protecta.eu

Signed and approved:

Client:

Job Title:

Products	Protecta FR Board Protecta FR Acrylic
Application	Fire stopping of insulated steel pipes in flexible walls
Construction	Minimum wall thickness of 75 mm and comprise steel studs or timber studs* lined on both faces with minimum 1 layer of 12.5 mm thick boards.

Fire & Sound classification

Steel pipes ≤ Ø324mm with 20-30mm continuous stone wool insulation
EI 45 C/U & E 45 C/U

Sound reduction (seal only)
52 dB

Polyseam Ltd, 15 St Andrews Road, Huddersfield, West Yorkshire, HD1 6SB
Tel: +44 (0) 148 4421036
Email: post.uk@polyseam.com

Sheet size: **A4**	Drawn date & no: 26/7/17
Scale: **NTS**	Drawn by: K.B

Installation Instructions

1. Before installing Protecta® FR Board ensure that the surface of all service penetrations and surrounding construction is free from all loose contaminants, dust and grease.
2. The board can be positioned to either side of the construction or anywhere in between.
3. Cut the required board(s) to suit the aperture dimensions and type and size of service penetration(s). All exposed and cut edges of the board can be sealed with Protecta® FR Coating or Protecta® FR Acrylic prior to fitting which will act as an adhesive and ensure a smoke tight seal.
4. All joints, gaps or imperfections in the installed seal must be filled with Protecta® FR Acrylic on both sides.
5. Protecta® FR Board can be over-painted with most emulsion or alkyd (gloss) paints.

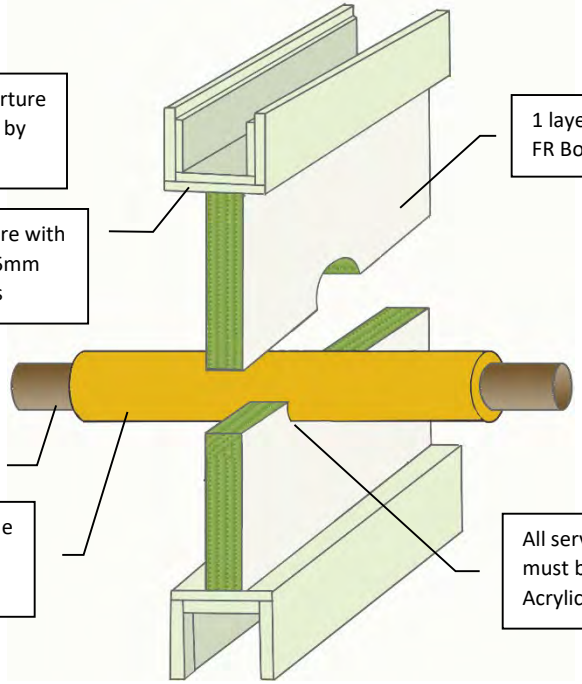

Minimum separations and limitations

An aperture can include several services, and they may also be different. The minimum permitted separation between adjacent seals/apertures is 200mm. Services should be a minimum of 25mm from seal edges. Services within the system Protecta® FR Board seal do not require a minimum separation, except pipes where pipe insulation penetrates the seal and plastic pipe penetrations which should be a minimum of 30 mm from other services in the aperture. The total amount of cross sections of services (including insulation) should not exceed 60% of the penetration area.

ETA 13/0673 & 18/0855

For all technical details on the products specified please refer to the technical data sheets that can be found on www.protecta.eu

Signed and approved:

Client:

Job Title:

Products	Protecta FR Board Protecta FR Acrylic
Application	Fire stopping of insulated steel pipes in flexible walls
Construction	Minimum wall thickness of 100 mm and comprise steel studs or timber studs* lined on both faces with minimum 2 layers of 12.5 mm thick boards.

Fire & Sound classification

Steel pipes ≤ Ø324mm with 20-30mm continuous stone wool insulation

EI 60 C/U & E 90 C/U

Sound reduction (seal only)

29 dB

Polyseam Ltd, 15 St Andrews Road, Huddersfield, West Yorkshire, HD1 6SB
Tel: +44 (0) 148 4421036
Email: post.uk@polyseam.com

Sheet size: **A4**	Drawn date & no: 26/7/17
Scale: **NTS**	Drawn by: K.B

Installation Instructions

1. Before installing Protecta® FR Board ensure that the surface of all service penetrations and surrounding construction is free from all loose contaminants, dust and grease.
2. The coated side of the board should be flush with the surface of the drywall on both sides.
3. Cut the required board(s) to suit the aperture dimensions and type and size of service penetration(s). All exposed and cut edges of the board can be sealed with Protecta® FR Coating or Protecta® FR Acrylic prior to fitting which will act as an adhesive and ensure a smoke tight seal.
4. All joints, gaps or imperfections in the installed seal must be filled with Protecta® FR Acrylic on both sides.
5. Protecta® FR Board can be over-painted with most emulsion or alkyd (gloss) paints.

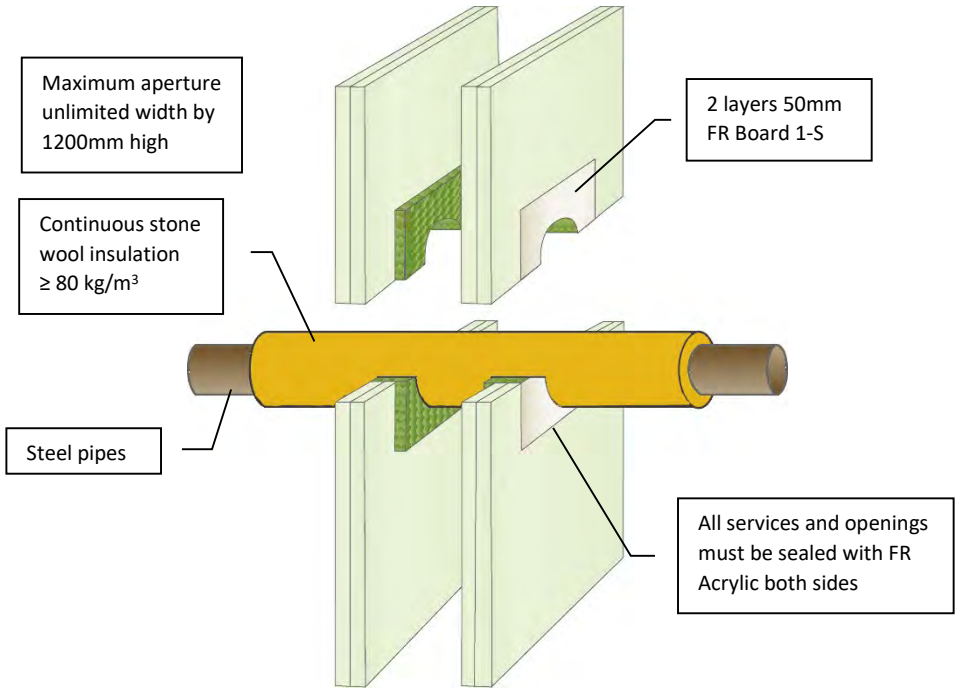

Minimum separations and limitations

An aperture can include several services, and they may also be different. The minimum permitted separation between adjacent seals/apertures is 200mm. Services should be a minimum of 25mm from seal edges. Services within the system Protecta® FR Board seal do not require a minimum separation, except pipes where pipe insulation penetrates the seal and plastic pipe penetrations which should be a minimum of 30 mm from other services in the aperture. The total amount of cross sections of services (including insulation) should not exceed 60% of the penetration area.

ETA 13/0673 & 18/0855

For all technical details on the products specified please refer to the technical data sheets that can be found on www.protecta.eu

Signed and approved:

Client:

Job Title:

Products	Protecta FR Board Protecta FR Acrylic
Application	Fire stopping of insulated steel pipes in flexible walls
Construction	Minimum wall thickness of 100 mm and comprise steel studs or timber studs* lined on both faces with minimum 2 layers of 12.5 mm thick boards.

Fire & Sound classification

Steel pipes ≤ Ø324mm with 20-80mm continuous stone wool insulation
EI 120 C/U & E 120 C/U

Sound reduction (seal only)
52 dB

Polyseam Ltd, 15 St Andrews Road, Huddersfield, West Yorkshire, HD1 6SB
Tel: +44 (0) 148 4421036
Email: post.uk@polyseam.com

Sheet size: **A4**	Drawn date & no: 10/1/17
Scale: **NTS**	Drawn by: K.B

Installation Instructions

1. Before installing Protecta® FR Board ensure that the surface of all service penetrations and surrounding construction is free from all loose contaminants, dust and grease.
2. Protecta® FR Coating and Protecta® FR Acrylic are water based, so in cases where corrosion protection is a problem, some metals may require a barrier between the seal and the surface prior to this installation.
3. The coated side of the board should be flush with the surface of the drywall on both sides.
4. Cut the required board(s) to suit the aperture dimensions and type and size of service penetration(s). All exposed and cut edges of the board can be sealed with Protecta® FR Coating or Protecta® FR Acrylic prior to fitting which will act as an adhesive and ensure a smoke tight seal.
5. All joints, gaps or imperfections in the installed seal must be filled with Protecta® FR Acrylic on both sides.
6. Protecta® FR Board can be over-painted with most emulsion or alkyd (gloss) paints.

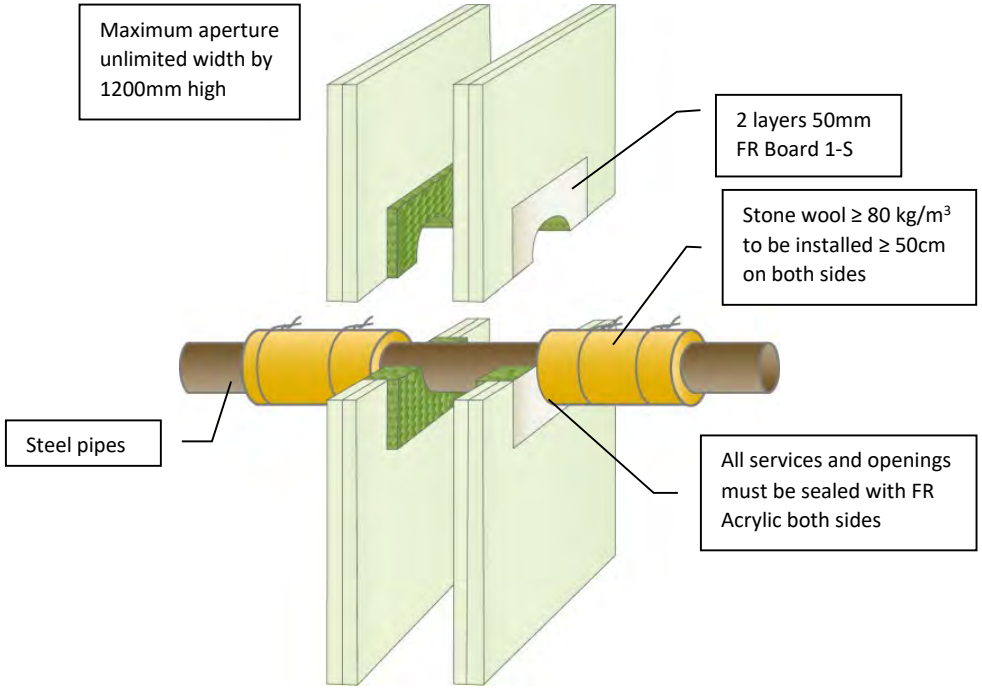

Minimum separations and limitations

An aperture can include several services, and they may also be different. The minimum permitted separation between adjacent seals/apertures is 200mm. Services should be a minimum of 25mm from seal edges. Services within the system Protecta® FR Board seal do not require a minimum separation, except pipes where pipe insulation penetrates the seal and plastic pipe penetrations which should be a minimum of 30 mm from other services in the aperture. The total amount of cross sections of services (including insulation) should not exceed 60% of the penetration area.

ETA 13/0673 & 18/0855

For all technical details on the products specified please refer to the technical data sheets that can be found on www.protecta.eu

Signed and approved:

Client:

Job Title:

Products	Protecta FR Board Protecta FR Acrylic
Application	Fire stopping of insulated steel pipes in flexible walls
Construction	Minimum wall thickness of 100 mm and comprise steel studs or timber studs* lined on both faces with minimum 2 layers of 12.5 mm thick boards.

Fire & Sound classification

Steel pipes ≤ Ø40mm with ≥ 20mm stone wool insulation
EI 120 C/U & E 120 C/U

Steel pipes ≤ Ø219mm with ≥ 30mm stone wool insulation
EI 90 C/U & E 120 C/U

Sound reduction (seal only)
52 dB

Polyseam Ltd, 15 St Andrews Road, Huddersfield, West Yorkshire, HD1 6SB
Tel: +44 (0) 148 4421036
Email: post.uk@polyseam.com

Sheet size: **A4**	Drawn date & no: 20/4/15
Scale: **NTS**	Drawn by: K.B

Installation Instructions

1. Before installing Protecta® FR Board ensure that the surface of all service penetrations and surrounding construction is free from all loose contaminants, dust and grease.
2. Protecta® FR Coating and Protecta® FR Acrylic are water based, so in cases where corrosion protection is a problem, some metals may require a barrier between the seal and the surface prior to this installation.
3. The coated side of the board should be flush with the surface of the drywall on both sides.
4. Cut the required board(s) to suit the aperture dimensions and type and size of service penetration(s). All exposed and cut edges of the board can be sealed with Protecta® FR Coating or Protecta® FR Acrylic prior to fitting which will act as an adhesive and ensure a smoke tight seal.
5. All joints, gaps or imperfections in the installed seal must be filled with Protecta® FR Acrylic on both sides.
6. Protecta® FR Board can be over-painted with most emulsion or alkyd (gloss) paints.

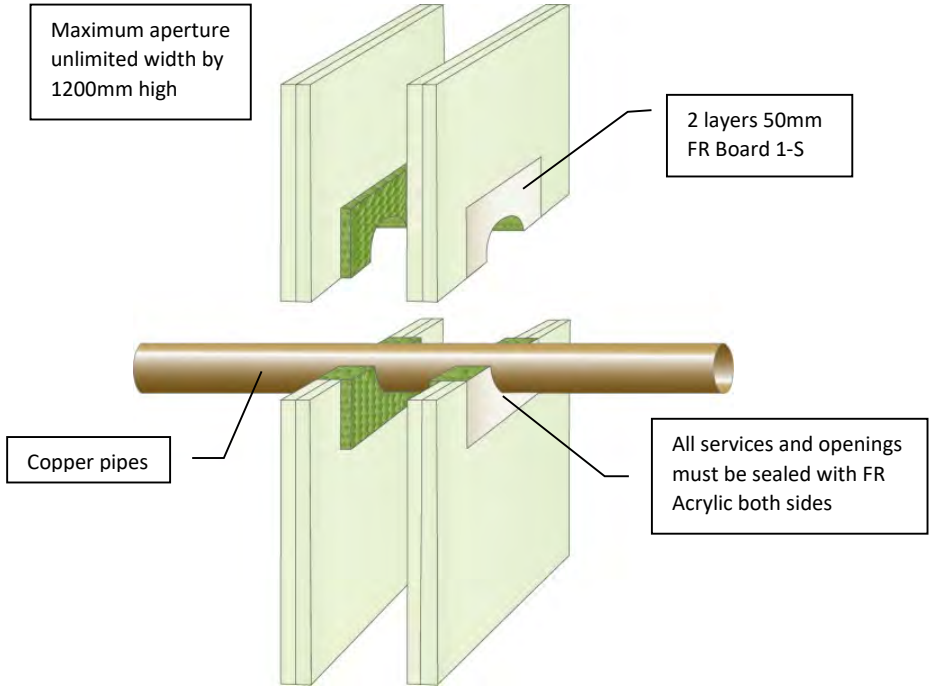

Minimum separations and limitations

An aperture can include several services, and they may also be different. The minimum permitted separation between adjacent seals/apertures is 200mm. Services should be a minimum of 25mm from seal edges. Services within the system Protecta® FR Board seal do not require a minimum separation, except pipes where pipe insulation penetrates the seal and plastic pipe penetrations which should be a minimum of 30 mm from other services in the aperture. The total amount of cross sections of services (including insulation) should not exceed 60% of the penetration area.

ETA 13/0673 & 18/0855

For all technical details on the products specified please refer to the technical data sheets that can be found on www.protecta.eu

Signed and approved:

Client:

Job Title:

Products	Protecta FR Board Protecta FR Acrylic
Application	Fire stopping of un-insulated copper pipes in flexible walls
Construction	Minimum wall thickness of 100 mm and comprise steel studs or timber studs* lined on both faces with minimum 2 layers of 12.5 mm thick boards.

Fire & Sound classification

Copper pipes ≤ Ø6mm
EI 60 C/C & E 120 C/C

Sound reduction (seal only)
52 dB

Polyseam Ltd, 15 St Andrews Road, Huddersfield, West Yorkshire, HD1 6SB
Tel: +44 (0) 148 4421036
Email: post.uk@polyseam.com

Sheet size: **A4**	Drawn date & no: 26/7/17
Scale: **NTS**	Drawn by: K.B

Installation Instructions

1. Before installing Protecta® FR Board ensure that the surface of all service penetrations and surrounding construction is free from all loose contaminants, dust and grease.
2. The coated side of the board should be flush with the surface of the drywall on both sides.
3. Cut the required board(s) to suit the aperture dimensions and type and size of service penetration(s). All exposed and cut edges of the board can be sealed with Protecta® FR Coating or Protecta® FR Acrylic prior to fitting which will act as an adhesive and ensure a smoke tight seal.
4. All joints, gaps or imperfections in the installed seal must be filled with Protecta® FR Acrylic on both sides.
5. Protecta® FR Board can be over-painted with most emulsion or alkyd (gloss) paints.

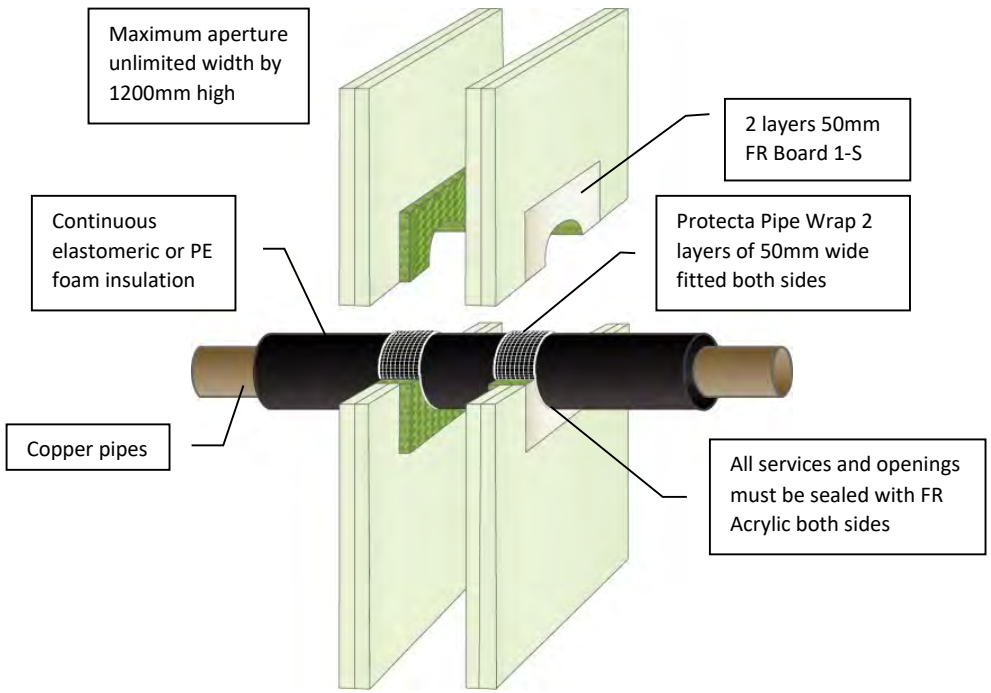

Minimum separations and limitations

An aperture can include several services, and they may also be different. The minimum permitted separation between adjacent seals/apertures is 200mm. Services should be a minimum of 25mm from seal edges. Services within the system Protecta® FR Board seal do not require a minimum separation, except pipes where pipe insulation penetrates the seal and plastic pipe penetrations which should be a minimum of 30 mm from other services in the aperture. The total amount of cross sections of services (including insulation) should not exceed 60% of the penetration area.

ETA 13/0673 & 18/0855

Client:

Job Title:

Products	Protecta FR Board Protecta FR Acrylic Protecta FR Pipe Wrap 25m
Application	Fire stopping of insulated copper pipes in flexible walls
Construction	Minimum wall thickness of 100 mm and comprise steel studs or timber studs* lined on both faces with minimum 2 layers of 12.5 mm thick boards.

Fire & Sound classification

Copper pipes ≤ Ø12mm with 9mm continuous foam insulation EI 120 C/C & E 120 C/C

Copper pipes ≤ Ø54mm with 9 - 13mm continuous foam insulation EI 90 C/C & E 120 C/C

Copper pipes ≤ Ø54mm with 14 - 25mm continuous foam insulation EI 60 C/C & E 120 C/C

Sound reduction (seal only) 52 dB

Polyseam Ltd, 15 St Andrews Road, Huddersfield, West Yorkshire, HD1 6SB
Tel: +44 (0) 148 4421036
Email: post.uk@polyseam.com

For all technical details on the products specified please refer to the technical data sheets that can be found on www.protecta.eu

Signed and approved:

Sheet size: **A4**	Drawn date & no: 5/3/19
Scale: **NTS**	Drawn by: K.B

Installation Instructions

1. Before installing Protecta® FR Board ensure that the surface of all service penetrations and surrounding construction is free from all loose contaminants, dust and grease.
2. Protecta® FR Coating and Protecta® FR Acrylic are water based, so in cases where corrosion protection is a problem, some metals may require a barrier between the seal and the surface prior to this installation.
3. The coated side of the board should be flush with the surface of the drywall on both sides.
4. Cut the required board(s) to suit the aperture dimensions and type and size of service penetration(s). All exposed and cut edges of the board can be sealed with Protecta® FR Coating or Protecta® FR Acrylic prior to fitting which will act as an adhesive and ensure a smoke tight seal.
5. All joints, gaps or imperfections in the installed seal must be filled with Protecta® FR Acrylic on both sides.
6. Protecta® FR Board can be over-painted with most emulsion or alkyd (gloss) paints.

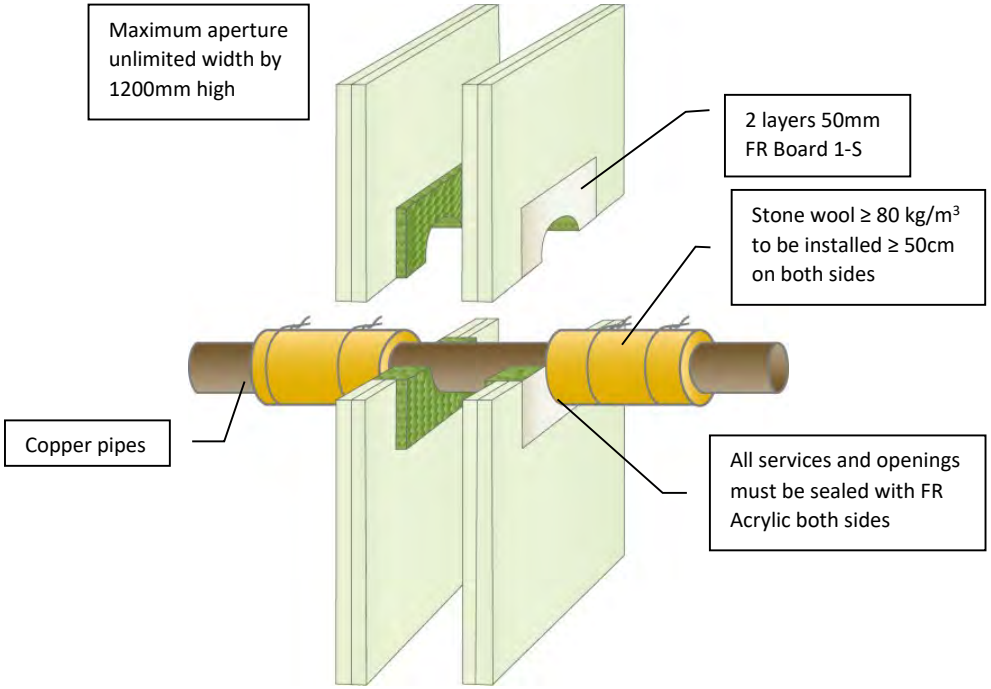

Minimum separations and limitations

An aperture can include several services, and they may also be different. The minimum permitted separation between adjacent seals/apertures is 200mm. Services should be a minimum of 25mm from seal edges. Services within the system Protecta® FR Board seal do not require a minimum separation, except pipes where pipe insulation penetrates the seal and plastic pipe penetrations which should be a minimum of 30 mm from other services in the aperture. The total amount of cross sections of services (including insulation) should not exceed 60% of the penetration area.

ETA 13/0673 & 18/0855

For all technical details on the products specified please refer to the technical data sheets that can be found on www.protecta.eu

Signed and approved:

Client:

Job Title:

Products	Protecta FR Board Protecta FR Acrylic
Application	Fire stopping of insulated copper pipes in flexible walls
Construction	Minimum wall thickness of 100 mm and comprise steel studs or timber studs* lined on both faces with minimum 2 layers of 12.5 mm thick boards.

Fire & Sound classification

Copper pipes ≤ Ø54mm with ≥ 20mm stone wool insulation

EI 120 C/C & E 120 C/C

Sound reduction (seal only)

52 dB

Polyseam Ltd, 15 St Andrews Road, Huddersfield, West Yorkshire, HD1 6SB
Tel: +44 (0) 148 4421036
Email: post.uk@polyseam.com

Sheet size: **A4**	Drawn date & no: 20/4/15
Scale: **NTS**	Drawn by: K.B

Installation Instructions

1. Before installing Protecta® FR Board ensure that the surface of all service penetrations and surrounding construction is free from all loose contaminants, dust and grease.
2. Protecta® FR Coating and Protecta® FR Acrylic are water based, so in cases where corrosion protection is a problem, some metals may require a barrier between the seal and the surface prior to this installation.
3. The coated side of the board should be flush with the surface of the drywall on both sides.
4. Cut the required board(s) to suit the aperture dimensions and type and size of service penetration(s). All exposed and cut edges of the board can be sealed with Protecta® FR Coating or Protecta® FR Acrylic prior to fitting which will act as an adhesive and ensure a smoke tight seal.
5. All joints, gaps or imperfections in the installed seal must be filled with Protecta® FR Acrylic on both sides.
6. Protecta® FR Board can be over-painted with most emulsion or alkyd (gloss) paints.

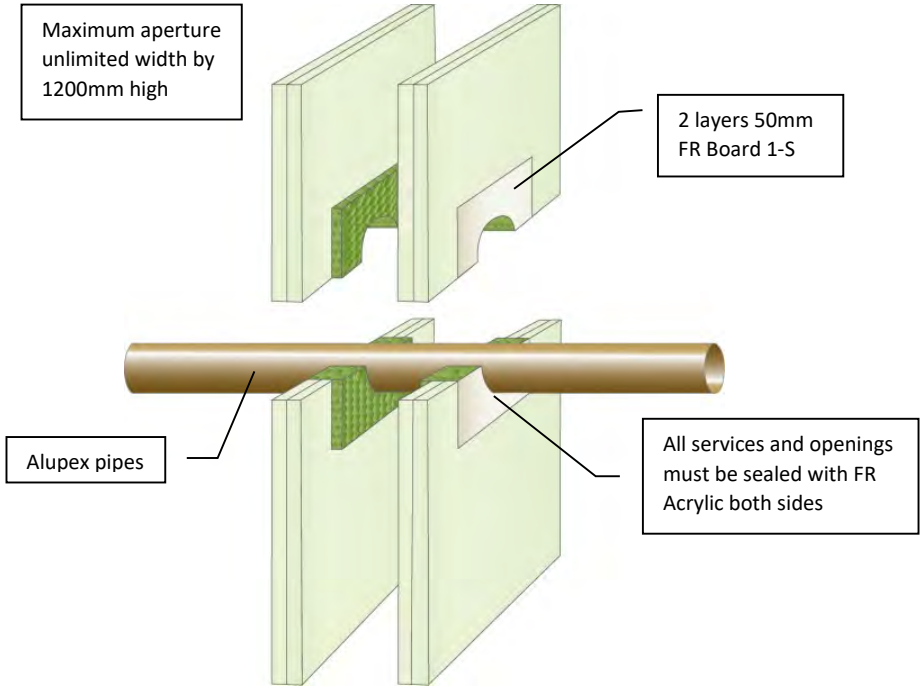

Minimum separations and limitations

An aperture can include several services, and they may also be different. The minimum permitted separation between adjacent seals/apertures is 200mm. Services should be a minimum of 25mm from seal edges. Services within the system Protecta® FR Board seal do not require a minimum separation, except pipes where pipe insulation penetrates the seal and plastic pipe penetrations which should be a minimum of 30 mm from other services in the aperture. The total amount of cross sections of services (including insulation) should not exceed 60% of the penetration area.

ETA 13/0673 & 18/0855

For all technical details on the products specified please refer to the technical data sheets that can be found on www.protecta.eu

Signed and approved:

Client:

Job Title:

Products	Protecta FR Board Protecta FR Acrylic
Application	Fire stopping of un-insulated alupex pipes in flexible walls
Construction	Minimum wall thickness of 100 mm and comprise steel studs or timber studs* lined on both faces with minimum 2 layers of 12.5 mm thick boards.

Fire & Sound classification

Alupex pipes ≤ Ø20mm
EI 120 C/C & E 120 C/C

Sound reduction (seal only)
52 dB

Polyseam Ltd, 15 St Andrews Road, Huddersfield, West Yorkshire, HD1 6SB
Tel: +44 (0) 148 4421036
Email: post.uk@polyseam.com

Sheet size: **A4**	Drawn date & no: 26/7/17
Scale: **NTS**	Drawn by: K.B

Installation Instructions

1. Before installing Protecta® FR Board ensure that the surface of all service penetrations and surrounding construction is free from all loose contaminants, dust and grease.
2. The coated side of the board should be flush with the surface of the drywall on both sides.
3. Cut the required board(s) to suit the aperture dimensions and type and size of service penetration(s). All exposed and cut edges of the board can be sealed with Protecta® FR Coating or Protecta® FR Acrylic prior to fitting which will act as an adhesive and ensure a smoke tight seal.
4. All joints, gaps or imperfections in the installed seal must be filled with Protecta® FR Acrylic on both sides.
5. Protecta® FR Board can be over-painted with most emulsion or alkyd (gloss) paints.

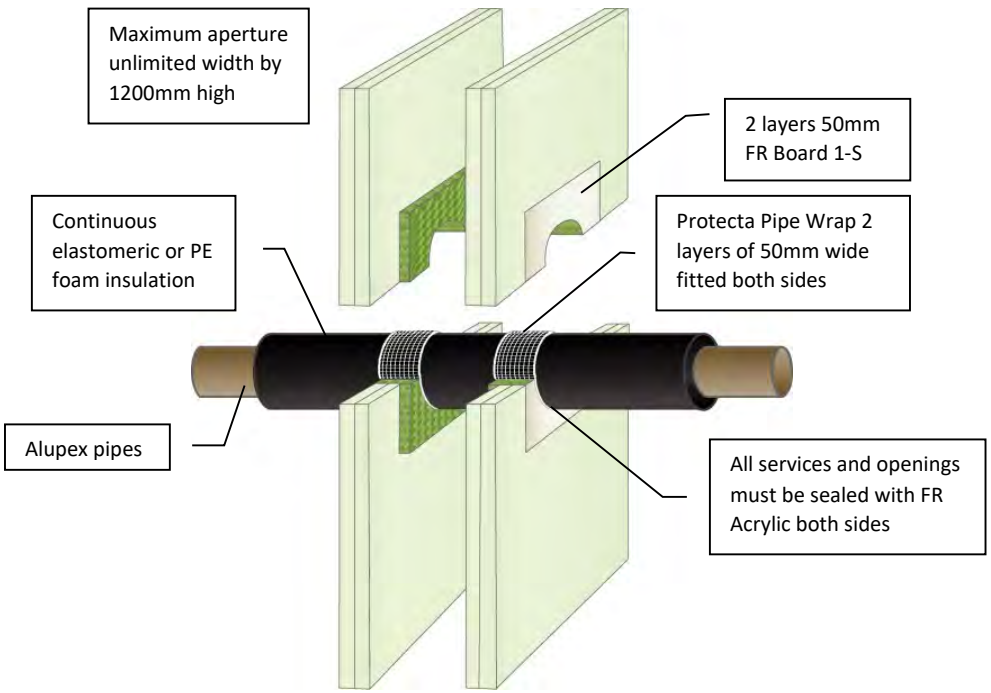

Minimum separations and limitations

An aperture can include several services, and they may also be different. The minimum permitted separation between adjacent seals/apertures is 200mm. Services should be a minimum of 25mm from seal edges. Services within the system Protecta® FR Board seal do not require a minimum separation, except pipes where pipe insulation penetrates the seal and plastic pipe penetrations which should be a minimum of 30 mm from other services in the aperture. The total amount of cross sections of services (including insulation) should not exceed 60% of the penetration area.

ETA 13/0673 & 18/0855

For all technical details on the products specified please refer to the technical data sheets that can be found on www.protecta.eu

Signed and approved:

Client:

Job Title:

Products	Protecta FR Board Protecta FR Acrylic Protecta FR Pipe Wrap 25m
Application	Fire stopping of insulated alupex pipes in flexible walls
Construction	Minimum wall thickness of 100 mm and comprise steel studs or timber studs* lined on both faces with minimum 2 layers of 12.5 mm thick boards.

Fire & Sound classification

Alupex pipes ≤ Ø75mm with 9 - 25mm continuous foam insulation

EI 120 C/C & E 120 C/C

Sound reduction (seal only)

52 dB

Polyseam Ltd, 15 St Andrews Road, Huddersfield, West Yorkshire, HD1 6SB
Tel: +44 (0) 148 4421036
Email: post.uk@polyseam.com

Sheet size: **A4**	Drawn date & no: 5/3/19
Scale: **NTS**	Drawn by: K.B

Installation Instructions

1. Before installing Protecta® FR Board ensure that the surface of all service penetrations and surrounding construction is free from all loose contaminants, dust and grease.
2. Protecta® FR Coating and Protecta® FR Acrylic are water based, so in cases where corrosion protection is a problem, some metals may require a barrier between the seal and the surface prior to this installation.
3. The coated side of the board should be flush with the surface of the drywall on both sides.
4. Cut the required board(s) to suit the aperture dimensions and type and size of service penetration(s). All exposed and cut edges of the board can be sealed with Protecta® FR Coating or Protecta® FR Acrylic prior to fitting which will act as an adhesive and ensure a smoke tight seal.
5. All joints, gaps or imperfections in the installed seal must be filled with Protecta® FR Acrylic on both sides.
6. Protecta® FR Board can be over-painted with most emulsion or alkyd (gloss) paints.

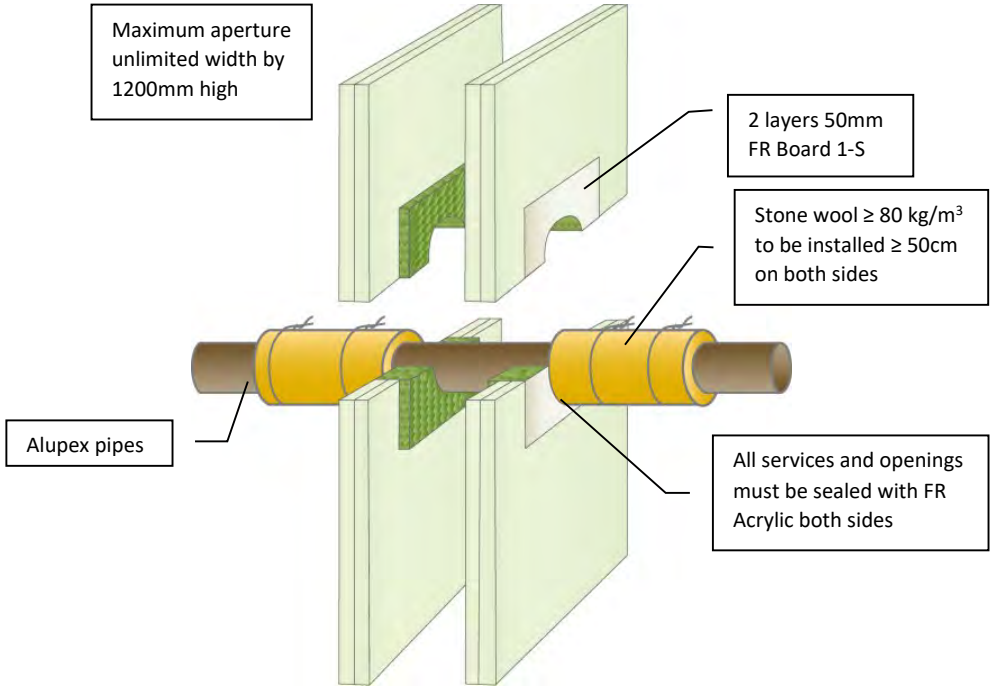

Minimum separations and limitations

An aperture can include several services, and they may also be different. The minimum permitted separation between adjacent seals/apertures is 200mm. Services should be a minimum of 25mm from seal edges. Services within the system Protecta® FR Board seal do not require a minimum separation, except pipes where pipe insulation penetrates the seal and plastic pipe penetrations which should be a minimum of 30 mm from other services in the aperture. The total amount of cross sections of services (including insulation) should not exceed 60% of the penetration area.

ETA 13/0673 & 18/0855

For all technical details on the products specified please refer to the technical data sheets that can be found on www.protecta.eu

Signed and approved:

Client:

Job Title:

Products	Protecta FR Board Protecta FR Acrylic
Application	Fire stopping of insulated alupex pipes in flexible walls
Construction	Minimum wall thickness of 100 mm and comprise steel studs or timber studs* lined on both faces with minimum 2 layers of 12.5 mm thick boards.

Fire & Sound classification

Alupex pipes ≤ Ø16mm with ≥ 20mm stone wool insulation
EI 120 C/C & E 120 C/C

Alupex pipes ≤ Ø75mm with ≥ 20mm stone wool insulation
EI 60 C/C & E 60 C/C

Sound reduction (seal only)
52 dB

Polyseam Ltd, 15 St Andrews Road, Huddersfield, West Yorkshire, HD1 6SB
Tel: +44 (0) 148 4421036
Email: post.uk@polyseam.com

Sheet size: **A4**	Drawn date & no: 20/4/15
Scale: **NTS**	Drawn by: K.B

Installation Instructions

1. Before installing Protecta® FR Board ensure that the surface of all service penetrations and surrounding construction is free from all loose contaminants, dust and grease.
2. The coated side of the board should be flush with the surface of the drywall on both sides.
3. Cut the required board(s) to suit the aperture dimensions and type and size of service penetration(s). All exposed and cut edges of the board can be sealed with Protecta® FR Coating or Protecta® FR Acrylic prior to fitting which will act as an adhesive and ensure a smoke tight seal.
4. All joints, gaps or imperfections in the installed seal must be filled with Protecta® FR Acrylic on both sides.
5. Protecta® FR Board can be over-painted with most emulsion or alkyd (gloss) paints.

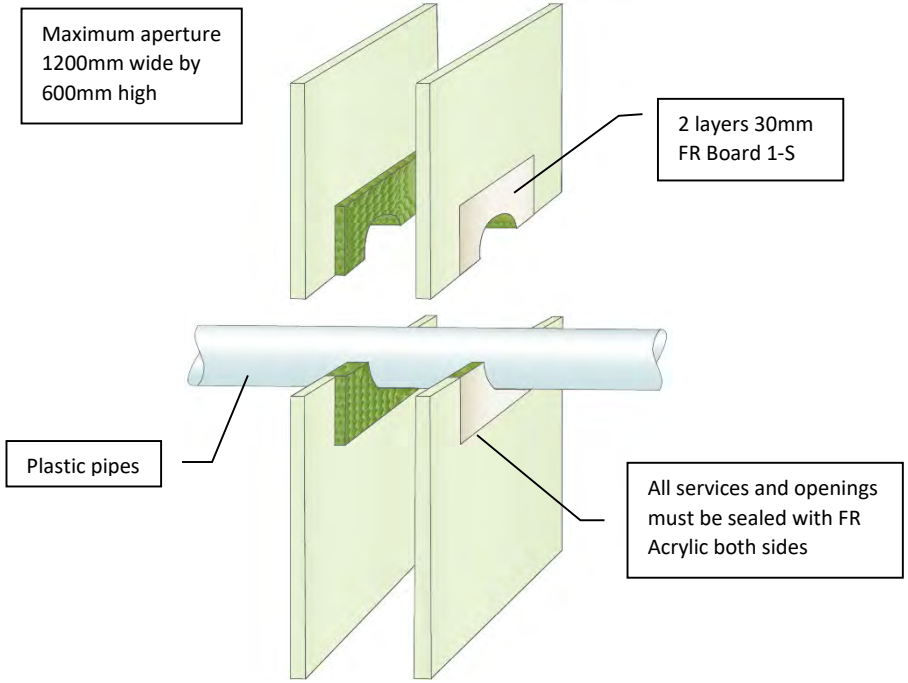

Minimum separations and limitations

An aperture can include several services, and they may also be different. The minimum permitted separation between adjacent seals/apertures is 200mm. Services should be a minimum of 25mm from seal edges. Services within the system Protecta® FR Board seal do not require a minimum separation, except pipes where pipe insulation penetrates the seal and plastic pipe penetrations which should be a minimum of 30 mm from other services in the aperture. The total amount of cross sections of services (including insulation) should not exceed 60% of the penetration area.

ETA 13/0673 & 18/0855

For all technical details on the products specified please refer to the technical data sheets that can be found on www.protecta.eu

Signed and approved:

Client:

Job Title:

Products	Protecta FR Board Protecta FR Acrylic
Application	Fire stopping of plastic pipes in flexible walls
Construction	Minimum wall thickness of 75 mm and comprise steel studs or timber studs* lined on both faces with minimum 1 layer of 12.5 mm thick boards

Fire & Sound classification

PVC-U and PVC-C pipes ≤ Ø32mm with wall thickness 1.0-1.8mm

EI 45 U/C & E 45 U/C

Sound reduction (seal only)

52 dB

Polyseam Ltd, 15 St Andrews Road, Huddersfield, West Yorkshire, HD1 6SB
Tel: +44 (0) 148 4421036
Email: post.uk@polyseam.com

Sheet size: **A4**	Drawn date & no: 5/3/19
Scale: **NTS**	Drawn by: K.B

Installation Instructions

1. Before installing Protecta® FR Board ensure that the surface of all service penetrations and surrounding construction is free from all loose contaminants, dust and grease.
2. The board can be positioned to either side of the construction or anywhere in between.
3. Cut the required board(s) to suit the aperture dimensions and type and size of service penetration(s). All exposed and cut edges of the board can be sealed with Protecta® FR Coating or Protecta® FR Acrylic prior to fitting which will act as an adhesive and ensure a smoke tight seal.
4. All joints, gaps or imperfections in the installed seal must be filled with Protecta® FR Acrylic on both sides.
5. Plastic pipes must be secured with Protecta® FR Collars Ø110mm fixed with penetrating threaded rod and nuts on both sides.
6. Protecta® FR Board can be over-painted with most emulsion or alkyd (gloss) paints.

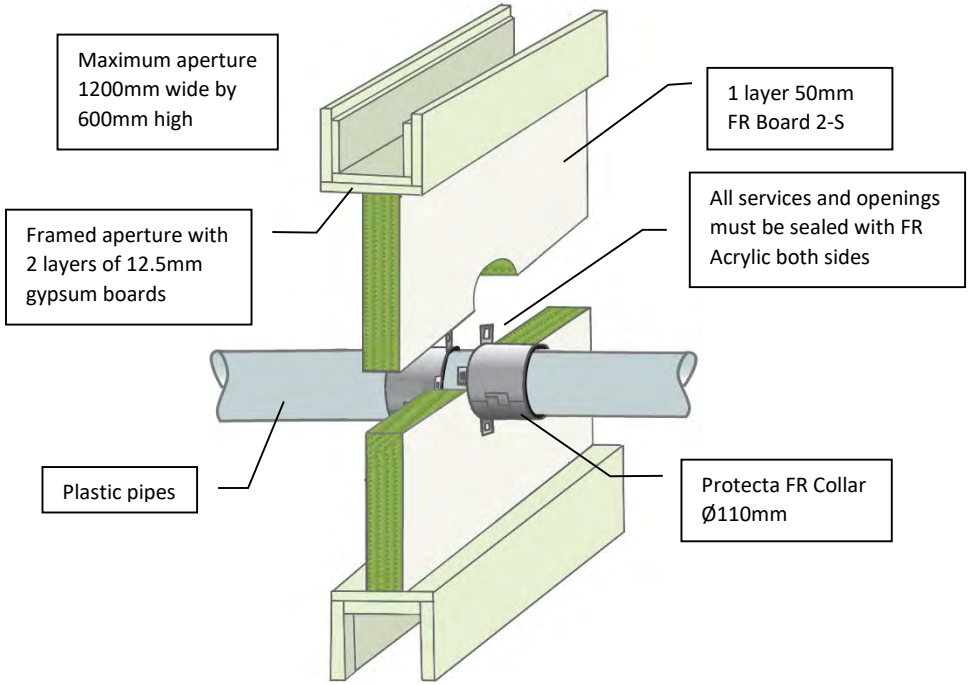

Minimum separations and limitations

An aperture can include several services, and they may also be different. The minimum permitted separation between adjacent seals/apertures is 200mm. Services should be a minimum of 25mm from seal edges. Services within the system Protecta® FR Board seal do not require a minimum separation, except pipes where pipe insulation penetrates the seal and plastic pipe penetrations which should be a minimum of 30 mm from other services in the aperture. The total amount of cross sections of services (including insulation) should not exceed 60% of the penetration area.

ETA 13/0673 & 18/0855

For all technical details on the products specified please refer to the technical data sheets that can be found on www.protecta.eu

Signed and approved:

Client:

Job Title:

Products	Protecta FR Board Protecta FR Acrylic Protecta FR Collar
Application	Fire stopping of plastic pipes in flexible walls
Construction	Minimum wall thickness of 100 mm and comprise steel studs or timber studs* lined on both faces with minimum 2 layers of 12.5 mm thick boards.

Fire & Sound classification

PVC-U and PVC-C pipes ≤ Ø110mm
EI 60 U/C & E 90 U/C

Sound reduction (seal only)
29 dB

Polyseam Ltd, 15 St Andrews Road, Huddersfield, West Yorkshire, HD1 6SB
Tel: +44 (0) 148 4421036
Email: post.uk@polyseam.com

Sheet size: **A4**	Drawn date & no: 26/7/17
Scale: **NTS**	Drawn by: K.B

Installation Instructions

1. Before installing Protecta® FR Board ensure that the surface of all service penetrations and surrounding construction is free from all loose contaminants, dust and grease.
2. The coated side of the board should be flush with the surface of the drywall on both sides.
3. Cut the required board(s) to suit the aperture dimensions and type and size of service penetration(s). All exposed and cut edges of the board can be sealed with Protecta® FR Coating or Protecta® FR Acrylic prior to fitting which will act as an adhesive and ensure a smoke tight seal.
4. All joints, gaps or imperfections in the installed seal must be filled with Protecta® FR Acrylic on both sides.
5. Protecta® FR Board can be over-painted with most emulsion or alkyd (gloss) paints.

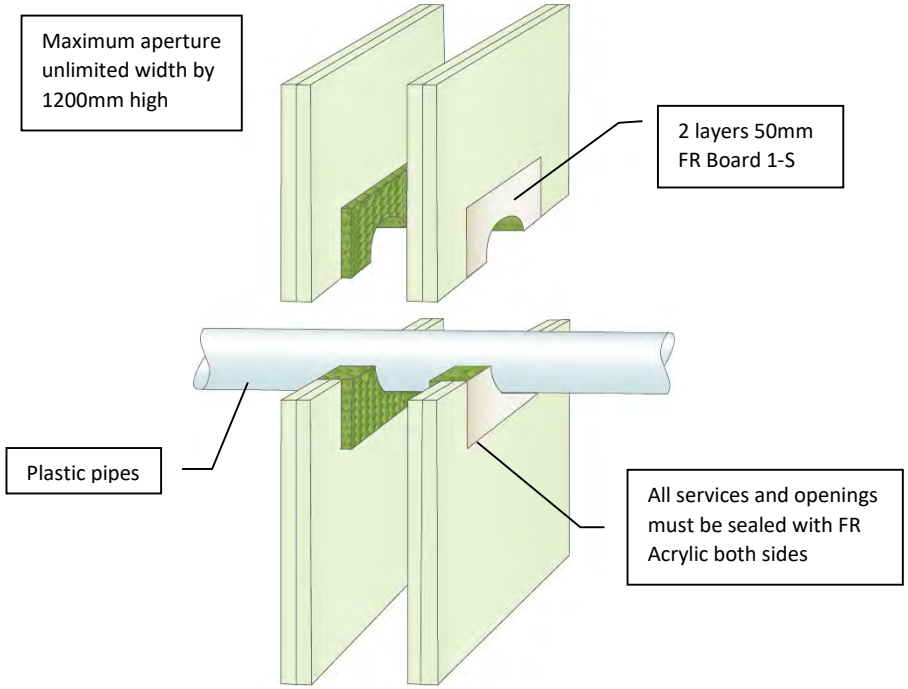

Minimum separations and limitations

An aperture can include several services, and they may also be different. The minimum permitted separation between adjacent seals/apertures is 200mm. Services should be a minimum of 25mm from seal edges. Services within the system Protecta® FR Board seal do not require a minimum separation, except pipes where pipe insulation penetrates the seal and plastic pipe penetrations which should be a minimum of 30 mm from other services in the aperture. The total amount of cross sections of services (including insulation) should not exceed 60% of the penetration area.

ETA 13/0673 & 18/0855

For all technical details on the products specified please refer to the technical data sheets that can be found on www.protecta.eu

Signed and approved:

Client:

Job Title:

Products	Protecta FR Board Protecta FR Acrylic
Application	Fire stopping of plastic pipes in flexible walls
Construction	Minimum wall thickness of 100 mm and comprise steel studs or timber studs* lined on both faces with minimum 2 layers of 12.5 mm thick boards.

Fire & Sound classification

PEX pipe-in-pipe ≤ Ø25mm EI 90 C/C & E 90 C/C

PVC-U and PVC-C pipes ≤ Ø32mm with wall thickness 1.0-2.4mm EI 60 U/C & E 90 U/C

PE, ABS and SAN+PVC pipes ≤ Ø32mm with wall thickness 2.0-3.0mm EI 60 U/C & E 60 U/C

PP pipes ≤ Ø32mm with wall thickness 1.8-2.2mm EI 60 U/C & E 120 U/C

Sound reduction (seal only) 52 dB

Polyseam Ltd, 15 St Andrews Road, Huddersfield, West Yorkshire, HD1 6SB
Tel: +44 (0) 148 4421036
Email: post.uk@polyseam.com

Sheet size: **A4**	Drawn date & no: 5/3/19
Scale: **NTS**	Drawn by: K.B

Installation Instructions

1. Before installing Protecta® FR Board ensure that the surface of all service penetrations and surrounding construction is free from all loose contaminants, dust and grease.
2. The coated side of the board should be flush with the surface of the drywall on both sides.
3. Cut the required board(s) to suit the aperture dimensions and type and size of service penetration(s). All exposed and cut edges of the board can be sealed with Protecta® FR Coating or Protecta® FR Acrylic prior to fitting which will act as an adhesive and ensure a smoke tight seal.
4. All joints, gaps or imperfections in the installed seal must be filled with Protecta® FR Acrylic on both sides.
5. Protecta® FR Board can be over-painted with most emulsion or alkyd (gloss) paints.

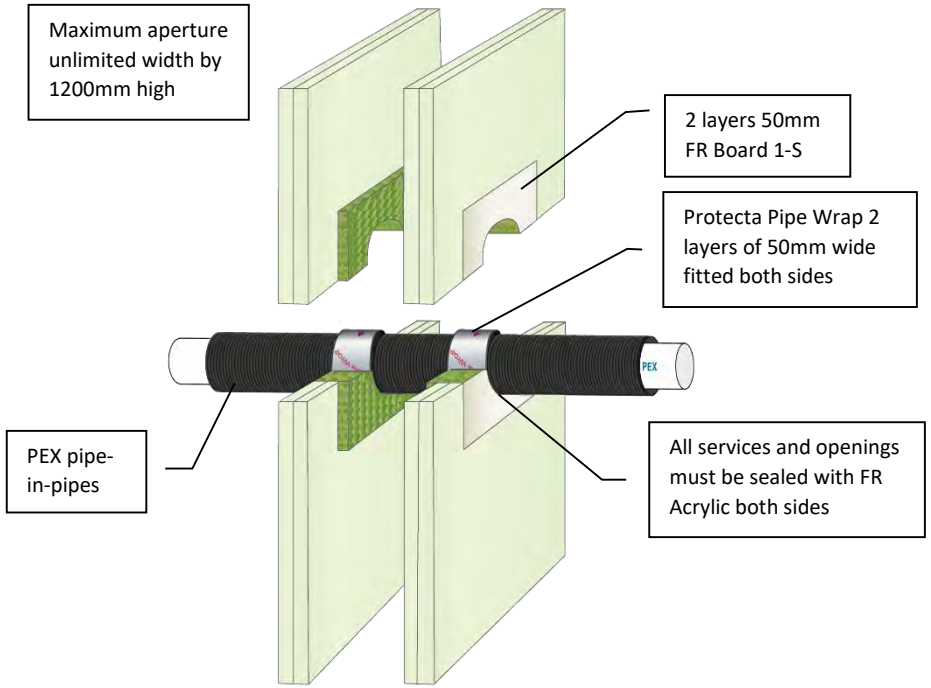

Minimum separations and limitations

An aperture can include several services, and they may also be different. The minimum permitted separation between adjacent seals/apertures is 200mm. Services should be a minimum of 25mm from seal edges. Services within the system Protecta® FR Board seal do not require a minimum separation, except pipes where pipe insulation penetrates the seal and plastic pipe penetrations which should be a minimum of 30 mm from other services in the aperture. The total amount of cross sections of services (including insulation) should not exceed 60% of the penetration area.

ETA 13/0673 & 18/0855

Client:

Job Title:

Products	Protecta FR Board Protecta FR Acrylic Protecta FR Pipe Wrap
Application	Fire stopping of PEX pipe-in-pipes in flexible walls
Construction	Minimum wall thickness of 100 mm and comprise steel studs or timber studs* lined on both faces with minimum 2 layers of 12.5 mm thick boards.

Fire & Sound classification

PEX pipe-in-pipes ≤ Ø54mm
EI 120 C/C & E 120 C/C

PEX pipe-in-pipes ≤ Ø25mm in bundles ≤ Ø50mm
EI 90 C/C & E 90 C/C

Sound reduction (seal only) 52 dB

Polyseam Ltd, 15 St Andrews Road, Huddersfield, West Yorkshire, HD1 6SB
Tel: +44 (0) 148 4421036
Email: post.uk@polyseam.com

For all technical details on the products specified please refer to the technical data sheets that can be found on www.protecta.eu

Signed and approved:

Sheet size: **A4**	Drawn date & no: 5/3/19
Scale: **NTS**	Drawn by: K.B

Installation Instructions

1. Before installing Protecta® FR Board ensure that the surface of all service penetrations and surrounding construction is free from all loose contaminants, dust and grease.
2. The coated side of the board should be flush with the surface of the drywall on both sides.
3. Cut the required board(s) to suit the aperture dimensions and type and size of service penetration(s). All exposed and cut edges of the board can be sealed with Protecta® FR Coating or Protecta® FR Acrylic prior to fitting which will act as an adhesive and ensure a smoke tight seal.
4. All joints, gaps or imperfections in the installed seal must be filled with Protecta® FR Acrylic on both sides.
5. Protecta® FR Board can be over-painted with most emulsion or alkyd (gloss) paints.

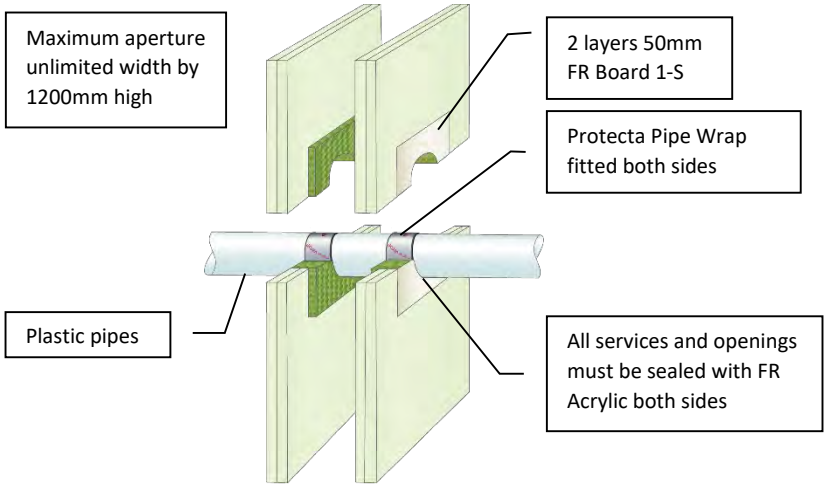

Services	Pipe Wall Thickness	FR Pipe Wrap	Classification
≤ Ø 40mm PVC-U & PVC-C	1.9 – 3.0mm	50 x 1.8mm (1 layer)	EI 120 U/U (E 120 U/U)
≤ Ø 40mm PE, ABS & SAN+PVC	2.4 – 3.7mm	50 x 1.8mm (1 layer)	EI 120 U/U (E 120 U/U)
≤ Ø 40mm PP	1.8 – 5.5mm	50 x 1.8mm (1 layer)	EI 120 U/U (E 120 U/U)
≤ Ø 110mm PVC-U & PVC-C	2.7 – 6.6mm	50 x 3.6mm (2 layers)	EI 90 U/C (E 120 U/C)
≤ Ø 110mm PE, ABS & SAN+PVC	4.2 – 10.0mm	50 x 3.6mm (2 layers)	EI 90 U/C (E 120 U/C)
≤ Ø 110mm PP	2.7 – 15.1mm	50 x 3.6mm (2 layers)	EI 90 U/U (E 90 U/U)
≤ Ø 125mm PVC-U & PVC-C	3.7 – 7.4mm	50 x 5.4mm (3 layers)	EI 90 U/C (E 120 U/C)
≤ Ø 125mm PE, ABS & SAN+PVC	4.8 – 12.0mm	50 x 5.4mm (3 layers)	EI 90 U/C (E 120 U/C)
≤ Ø 125mm PP	3.1 – 17.1mm	50 x 5.4mm (3 layers)	EI 90 U/C (E 120 U/C)
≤ Ø 160mm PVC-U & PVC-C	9.5mm	50 x 7.2mm (4 layers)	EI 90 U/C (E 120 U/C)
≤ Ø 160mm PE, ABS & SAN+PVC	14.6mm	50 x 7.2mm (4 layers)	EI 90 U/C (E 120 U/C)
≤ Ø 160mm PP	21.9mm	50 x 7.2mm (4 layers)	EI 90 U/C (E 120 U/C)
≤ Ø 200mm PVC-U & PVC-C	9.0 – 10.2mm	50 x 18.0mm (10 layers)	EI 90 C/C (E 90 C/C)
≤ Ø 250mm PVC-U & PVC-C	8.5 – 11.0mm	50 x 18.0mm (10 layers)	EI 90 C/C (E 90 C/C)
≤ Ø 315mm PVC-U & PVC-C	7.7 – 12.1mm	50 x 18.0mm (10 layers)	EI 90 C/C (E 90 C/C)
≤ Ø 400mm PVC-U & PVC-C	9.8 – 15.3mm	50 x 28.8mm (16 layers)	EI 90 C/C (E 90 C/C)

Minimum separations and limitations An aperture can include several services, and they may also be different. The minimum permitted separation between adjacent seals/apertures is 200mm. Services should be a minimum of 25mm from seal edges. Services within the system Protecta® FR Board seal do not require a minimum separation, except pipes where pipe insulation penetrates the seal and plastic pipe penetrations which should be a minimum of 30 mm from other services in the aperture. The total amount of cross sections of services should not exceed 60% of the penetration area.

ETA 13/0673 & 18/0855

For all technical details on the products specified please refer to the technical data sheets that can be found on www.protecta.eu

Signed and approved:

Client:

Job Title:

Products Protecta FR Board
Protecta FR Acrylic
Protecta FR Pipe Wrap 25m

Application Fire stopping of plastic pipes in flexible walls

Construction Minimum wall thickness of 100 mm and comprise steel studs or timber studs* lined on both faces with minimum 2 layers of 12.5 mm thick boards

Fire & Sound classification

For fire classifications please see the table on the left.

Sound reduction (seal only) 52 dB

Polyseam Ltd, 15 St Andrews Road, Huddersfield, West Yorkshire, HD1 6SB
Tel: +44 (0) 148 4421036
Email: post.uk@polyseam.com

Sheet size:	Drawn date & no:
A4	5/3/19
Scale:	Drawn by:
NTS	K.B

Installation Instructions

1. Before installing Protecta® FR Board ensure that the surface of all service penetrations and surrounding construction is free from all loose contaminants, dust and grease.
2. The coated side of the board should be flush with the surface of the drywall on both sides.
3. Cut the required board(s) to suit the aperture dimensions and type and size of service penetration(s). All exposed and cut edges of the board can be sealed with Protecta® FR Coating or Protecta® FR Acrylic prior to fitting which will act as an adhesive and ensure a smoke tight seal.
4. All joints, gaps or imperfections in the installed seal must be filled with Protecta® FR Acrylic on both sides.
5. Protecta® FR Board can be over-painted with most emulsion or alkyd (gloss) paints.

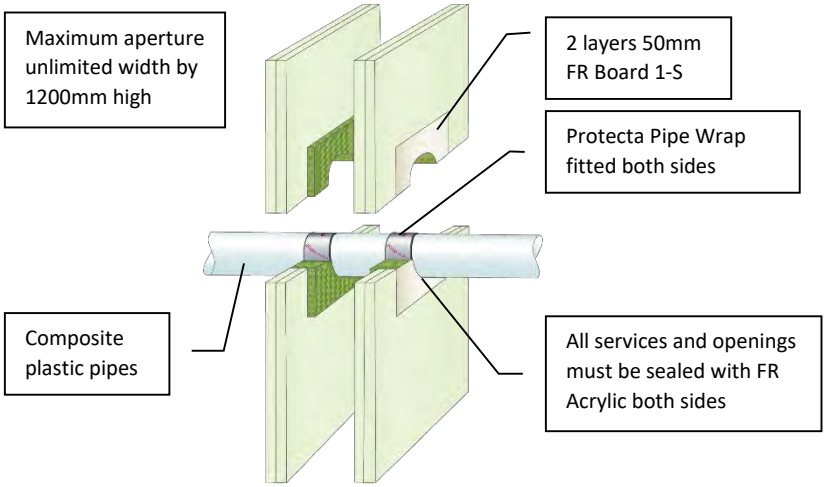

Services	FR Pipe Wrap	Classification
Ø 32mm Aquatherm Green SDR9 pipes	50 x 1.8mm (1 layer)	EI 90 C/C (E 120 C/C)
≤ Ø 110mm Aquatherm Green SDR9 pipes	50 x 3.6mm (2 layers)	EI 90 C/C (E 120 C/C)
≤ Ø 50mm BluePower pipes	50 x 3.6mm (2 layers)	EI 90 U/U (E 90 U/U)
≤ Ø 110mm BluePower pipes	50 x 3.6mm (2 layers)	EI 90 C/U (E 90 C/U)
≤ Ø 50mm Geberit Silent-PP pipes	50 x 3.6mm (2 layers)	EI 120 U/U (E 120 U/U)
≤ Ø 110mm Geberit Silent-PP pipes	50 x 3.6mm (2 layers)	EI 120 U/C (E 120 U/C)
≤ Ø 50mm Polo-Kal NG pipes	50 x 3.6mm (2 layers)	EI 120 U/U (E 120 U/U)
≤ Ø 110mm Polo-Kal NG pipes	50 x 3.6mm (2 layers)	EI 120 U/C (E 120 U/C)
Ø 125mm Polo-Kal NG pipes	50 x 7.2mm (4 layers)	EI 120 U/C (E 120 U/C)
Ø 160mm Polo-Kal NG pipes	50 x 10.8mm (6 layers)	EI 120 U/C (E 120 U/C)
≤ Ø 50mm Rehau Raupiano Plus pipes	50 x 3.6mm (2 layers)	EI 120 U/U (E 120 U/U)
≤ Ø 110mm Rehau Raupiano Plus pipes	50 x 3.6mm (2 layers)	EI 120 U/C (E 120 U/C)
Ø 125mm Rehau Raupiano Plus pipes	50 x 7.2mm (4 layers)	EI 120 U/C (E 120 U/C)
Ø 160mm Rehau Raupiano Plus pipes	50 x 10.8mm (6 layers)	EI 120 U/C (E 120 U/C)
≤ Ø 50mm Wavin SiTech pipes	50 x 3.6mm (2 layers)	EI 90 U/U (E 120 U/U)
≤ Ø 110mm Wavin SiTech pipes	50 x 3.6mm (2 layers)	EI 60 U/C (E 120 U/C)

Minimum separations and limitations An aperture can include several services, and they may also be different. The minimum permitted separation between adjacent seals/apertures is 200mm. Services should be a minimum of 25mm from seal edges. Services within the system Protecta® FR Board seal do not require a minimum separation, except pipes where pipe insulation penetrates the seal and plastic pipe penetrations which should be a minimum of 30 mm from other services in the aperture. The total amount of cross sections of services should not exceed 60% of the penetration area.

ETA 13/0673 & 18/0855

For all technical details on the products specified please refer to the technical data sheets that can be found on www.protecta.eu

Signed and approved:

Client:

Job Title:

Products Protecta FR Board
Protecta FR Acrylic
Protecta FR Pipe Wrap 25m

Application Fire stopping of composite plastic pipes in flexible walls

Construction Minimum wall thickness of 100 mm and comprise steel studs or timber studs* lined on both faces with minimum 2 layers of 12.5 mm thick boards

Fire & Sound classification

For fire classifications please see the table on the left.

Sound reduction (seal only) 52 dB

Polyseam Ltd, 15 St Andrews Road, Huddersfield, West Yorkshire, HD1 6SB
Tel: +44 (0) 148 4421036
Email: post.uk@polyseam.com

Sheet size:	Drawn date & no:
A4	5/3/19
Scale:	Drawn by:
NTS	K.B

Installation Instructions

1. Before installing Protecta® FR Board ensure that the surface of all service penetrations and surrounding construction is free from all loose contaminants, dust and grease.
2. The coated side of the board should be flush with the surface of the drywall on both sides.
3. Cut the required board(s) to suit the aperture dimensions and type and size of service penetration(s). All exposed and cut edges of the board can be sealed with Protecta® FR Coating or Protecta® FR Acrylic prior to fitting which will act as an adhesive and ensure a smoke tight seal.
4. All joints, gaps or imperfections in the installed seal must be filled with Protecta® FR Acrylic on both sides.
5. Protecta® FR Board can be over-painted with most emulsion or alkyd (gloss) paints.

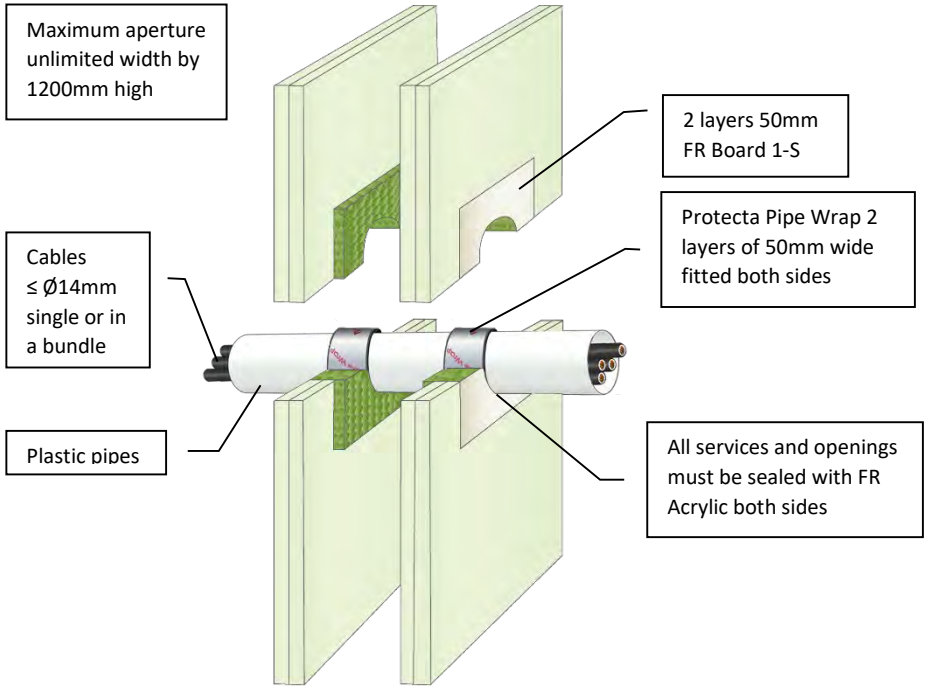

Minimum separations and limitations

An aperture can include several services, and they may also be different. The minimum permitted separation between adjacent seals/apertures is 200mm. Services should be a minimum of 25mm from seal edges. Services within the system Protecta® FR Board seal do not require a minimum separation, except pipes where pipe insulation penetrates the seal and plastic pipe penetrations which should be a minimum of 30 mm from other services in the aperture. The total amount of cross sections of services (including insulation) should not exceed 60% of the penetration area.

ETA 13/0673 & 18/0855

Client:

Job Title:

Products	Protecta FR Board Protecta FR Acrylic Protecta FR Pipe Wrap
Application	Fire stopping of conduits in flexible walls
Construction	Minimum wall thickness of 100 mm and comprise steel studs or timber studs* lined on both faces with minimum 2 layers of 12.5 mm thick boards.

Fire & Sound classification

Conduits of PVC-U & PVC-C pipe ≤ Ø110mm with wall thickness 2.7-6.6mm
EI 90 U/C & E 120 U/C

Conduits of PE, ABS & SAN+PVC pipes ≤ Ø110mm with wall thickness 4.2-10.0mm
EI 90 U/C & E 120 U/C

Conduits of PP pipe ≤ Ø110mm with wall thickness 2.7-15.1mm EI 90 U/C & E 120 U/C

Sound reduction (seal only) 52 dB

Polyseam Ltd, 15 St Andrews Road, Huddersfield, West Yorkshire, HD1 6SB
Tel: +44 (0) 148 4421036
Email: post.uk@polyseam.com

For all technical details on the products specified please refer to the technical data sheets that can be found on www.protecta.eu

Signed and approved:

Sheet size: **A4**	Drawn date & no: 5/3/19
Scale: **NTS**	Drawn by: K.B

Installation Instructions

1. Before installing Protecta® FR Board ensure that the surface of all service penetrations and surrounding construction is free from all loose contaminants, dust and grease.
2. Protecta® FR Coating and Protecta® FR Acrylic are water based, so in cases where corrosion protection is a problem, some metals may require a barrier between the seal and the surface prior to this installation.
3. The coated side of the board should be flush with the surface of the drywall on both sides.
4. Cut the required board(s) to suit the aperture dimensions and type and size of service penetration(s). All exposed and cut edges of the board can be sealed with Protecta® FR Coating or Protecta® FR Acrylic prior to fitting which will act as an adhesive and ensure a smoke tight seal.
5. All joints, gaps or imperfections in the installed seal must be filled with Protecta® FR Acrylic on both sides.
6. Insulate the ventilation duct towards the fire seal on both sides with 30mm thick stone wool matting to the length given on this page. Insulate on one side only if the duct terminates in the wall.
7. Protecta® FR Board can be over-painted with most emulsion or alkyd (gloss) paints.

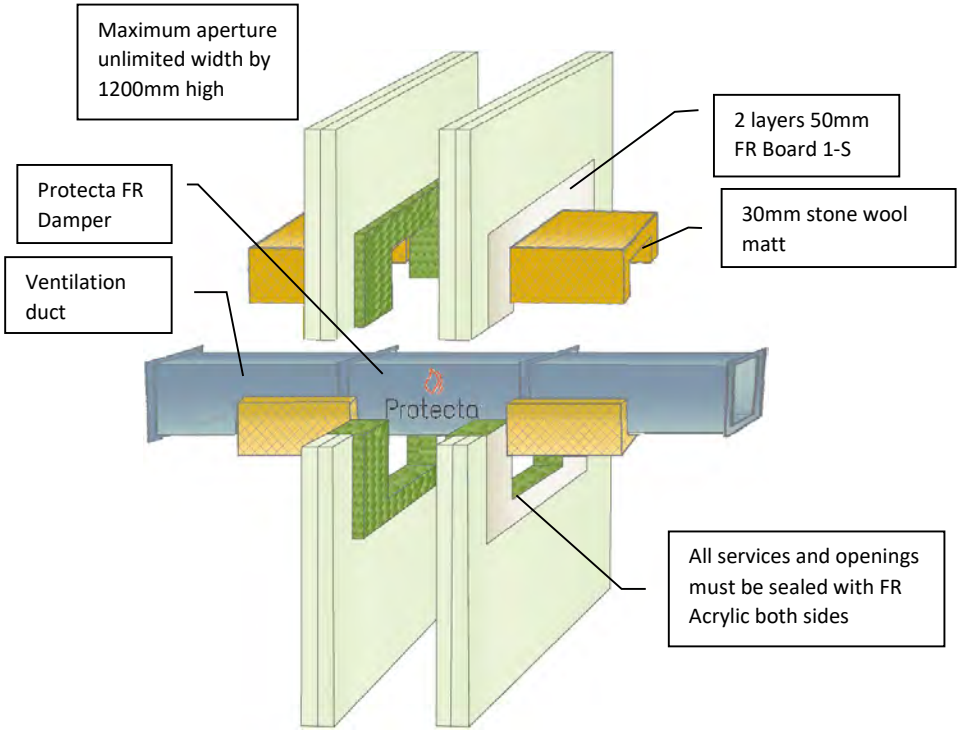

Minimum separations and limitations

An aperture can include several services, and they may also be different. The minimum permitted separation between adjacent seals/apertures is 200mm. Services should be a minimum of 25mm from seal edges. Services within the system Protecta® FR Board seal do not require a minimum separation, except pipes where pipe insulation penetrates the seal and plastic pipe penetrations which should be a minimum of 30 mm from other services in the aperture. The total amount of cross sections of services (including insulation) should not exceed 60% of the penetration area.

This product is certified to applicable European (EN) standards and UL-EU Mark service requirements.

For all technical details on the products specified please refer to the technical data sheets that can be found on www.protecta.eu

Signed and approved:

Client:

Job Title:

Products	Protecta FR Board Protecta FR Acrylic Protecta FR Damper
Application	Fire stopping of ventilation ducts in flexible walls
Construction	Minimum wall thickness of 100 mm and comprise steel studs or timber studs* lined on both faces with minimum 2 layers of 12.5 mm thick boards

Fire & Sound classification

≤ Ø 400mm damper/duct with ≥ 200mm stone wool matt on both sides EI 120 & E 120
≤ Ø 1250mm damper/duct with ≥ 500mm stone wool matt on both sides EI 60 & E 90
≤ 600mm high x 1000mm wide damper/duct with ≥ 500mm stone wool matt on both sides EI 120 & E 120
≤ 1200mm high x 1700mm wide damper/duct with ≥ 500mm stone wool matt on both sides EI 90 & E 90

Sound reduction (seal only) 52 dB

Polyseam Ltd, 15 St Andrews Road, Huddersfield, West Yorkshire, HD1 6SB
Tel: +44 (0) 148 4421036
Email: post.uk@polyseam.com

Sheet size: **A4**	Drawn date & no: 27/7/17
Scale: **NTS**	Drawn by: K.B

Installation Instructions

1. Before installing Protecta® FR Board ensure that the surface of all service penetrations and surrounding construction is free from all loose contaminants, dust and grease.
2. The board can be positioned to either side of the construction or anywhere in between.
3. Cut the required board(s) to suit the aperture dimensions and type and size of service penetration(s). All exposed and cut edges of the board can be sealed with Protecta® FR Coating or Protecta® FR Acrylic prior to fitting which will act as an adhesive and ensure a smoke tight seal.
4. All joints, gaps or imperfections in the installed seal must be filled with Protecta® FR Acrylic on both sides.
5. All cables and cable trays must be coated 150mm each side with 300µ WFT Protecta Service Coat FR-1.
6. Protecta® FR Board can be over-painted with most emulsion or alkyd (gloss) paints.

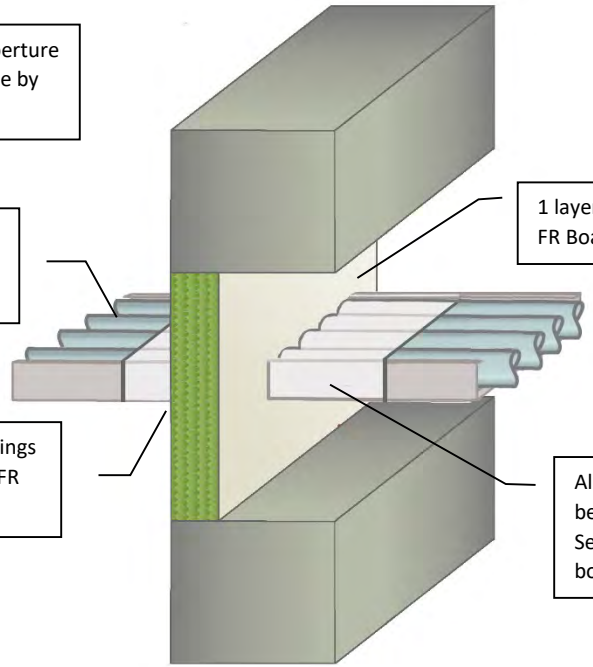

Minimum separations and limitations

An aperture can include several services, and they may also be different. The minimum permitted separation between adjacent seals/apertures is 200mm. Services should be a minimum of 25mm from seal edges. Services within the system Protecta® FR Board seal do not require a minimum separation, except pipes where pipe insulation penetrates the seal and plastic pipe penetrations which should be a minimum of 30 mm from other services in the aperture. The total amount of cross sections of services (including insulation) should not exceed 60% of the penetration area.

ETA 13/0673 & 18/0855

For all technical details on the products specified please refer to the technical data sheets that can be found on www.protecta.eu

Signed and approved:

Client:

Job Title:

Products	Protecta FR Board Protecta FR Acrylic Protecta FR ServiceCoat FR-1
Application	Fire stopping of cables on cable trays in rigid walls
Construction	Minimum wall thickness of 100 mm and comprise concrete, aerated concrete or masonry, with a density of ≥ 650 kg/m³

Fire & Sound classification

Cables ≤ Ø80mm single or bundled on perforated cable trays and ladders

EI 60 & E 60

Sound reduction (seal only)

29 dB

Polyseam Ltd, 15 St Andrews Road, Huddersfield, West Yorkshire, HD1 6SB
Tel: +44 (0) 148 4421036
Email: post.uk@polyseam.com

Sheet size: **A4**	Drawn date & no: 26/7/17
Scale: **NTS**	Drawn by: K.B

Installation Instructions

1. Before installing Protecta® FR Board ensure that the surface of all service penetrations and surrounding construction is free from all loose contaminants, dust and grease.
2. The board can be positioned to either side of the construction or anywhere in between.
3. Cut the required board(s) to suit the aperture dimensions and type and size of service penetration(s). All exposed and cut edges of the board can be sealed with Protecta® FR Coating or Protecta® FR Acrylic prior to fitting which will act as an adhesive and ensure a smoke tight seal.
4. All joints, gaps or imperfections in the installed seal must be filled with Protecta® FR Acrylic on both sides.
5. Protecta® FR Board can be over-painted with most emulsion or alkyd (gloss) paints.

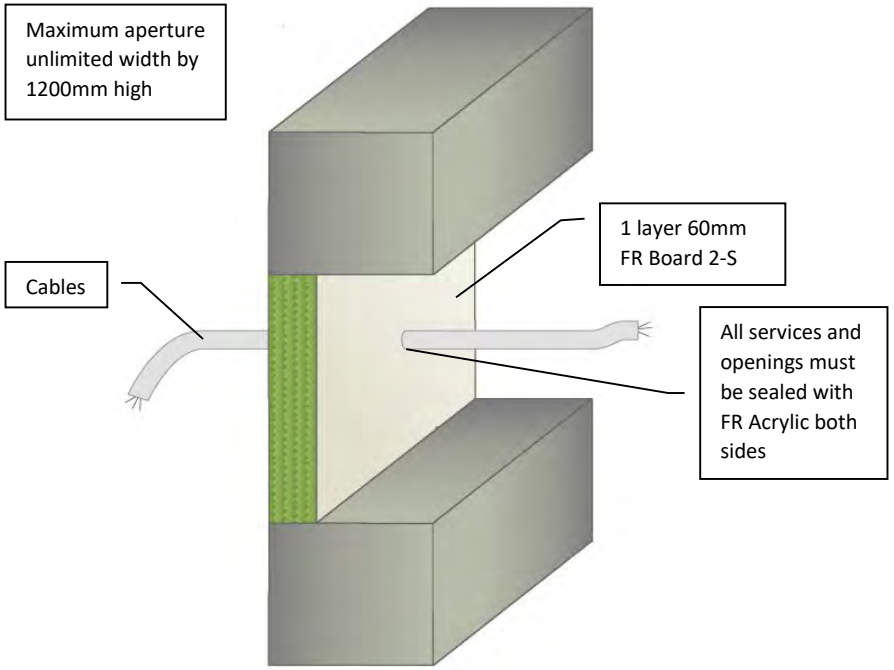

Minimum separations and limitations

An aperture can include several services, and they may also be different. The minimum permitted separation between adjacent seals/apertures is 200mm. Services should be a minimum of 25mm from seal edges. Services within the system Protecta® FR Board seal do not require a minimum separation, except pipes where pipe insulation penetrates the seal and plastic pipe penetrations which should be a minimum of 30 mm from other services in the aperture. The total amount of cross sections of services (including insulation) should not exceed 60% of the penetration area.

ETA 13/0673 & 18/0855

For all technical details on the products specified please refer to the technical data sheets that can be found on www.protecta.eu

Signed and approved:

Client:

Job Title:

Products	Protecta FR Board Protecta FR Acrylic
Application	Fire stopping of cables in rigid walls
Construction	Minimum wall thickness of 150 mm and comprise concrete, aerated concrete or masonry, with a density of ≥ 650 kg/m³

Fire & Sound classification

Cables ≤ Ø21mm — EI 90 & E 240

Sound reduction (seal only) — 29 dB

Polyseam Ltd, 15 St Andrews Road, Huddersfield, West Yorkshire, HD1 6SB
Tel: +44 (0) 148 4421036
Email: post.uk@polyseam.com

Sheet size: **A4**	Drawn date & no: 20/4/15
Scale: **NTS**	Drawn by: K.B

Installation Instructions

1. Before installing Protecta® FR Board ensure that the surface of all service penetrations and surrounding construction is free from all loose contaminants, dust and grease.
2. The boards should be flush with the surface of the construction on both sides to maximize the fire resistance. If this is not possible, there should be an air gap of at least 30mm between the boards.
3. Cut the required board(s) to suit the aperture dimensions and type and size of service penetration(s). All exposed and cut edges of the board can be sealed with Protecta® FR Coating or Protecta® FR Acrylic prior to fitting which will act as an adhesive and ensure a smoke tight seal.
4. All joints, gaps or imperfections in the installed seal must be filled with Protecta® FR Acrylic on both sides.
5. Protecta® FR Board can be over-painted with most emulsion or alkyd (gloss) paints.

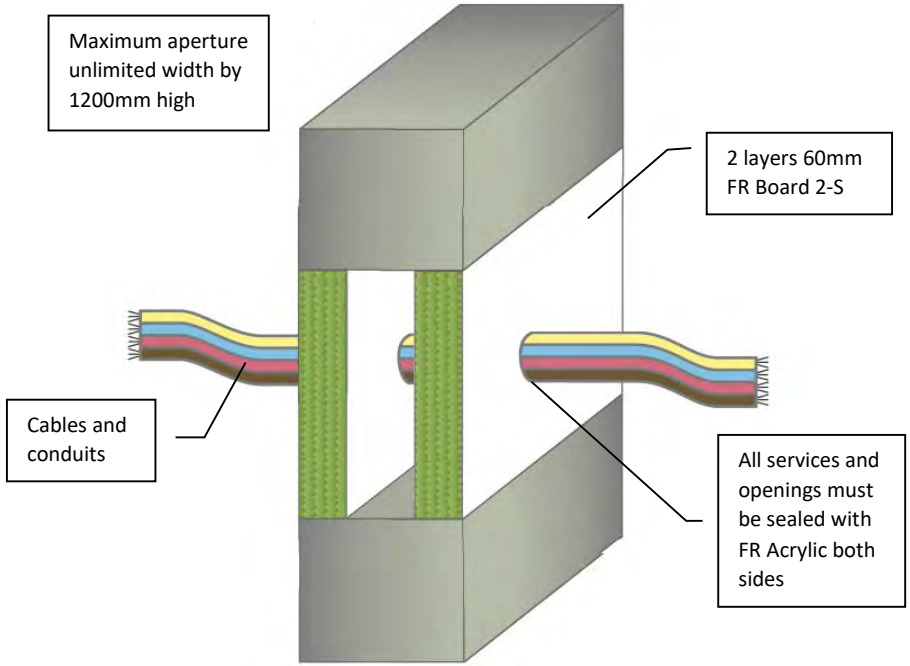

Minimum separations and limitations

An aperture can include several services, and they may also be different. The minimum permitted separation between adjacent seals/apertures is 200mm. Services should be a minimum of 25mm from seal edges. Services within the system Protecta® FR Board seal do not require a minimum separation, except pipes where pipe insulation penetrates the seal and plastic pipe penetrations which should be a minimum of 30 mm from other services in the aperture. The total amount of cross sections of services (including insulation) should not exceed 60% of the penetration area.

ETA 13/0673 & 18/0855

For all technical details on the products specified please refer to the technical data sheets that can be found on www.protecta.eu

Signed and approved:

Client:

Job Title:

Products	Protecta FR Board Protecta FR Acrylic
Application	Fire stopping of cables and conduits in rigid walls
Construction	Minimum wall thickness of 150 mm and comprise concrete, aerated concrete or masonry, with a density of ≥ 650 kg/m³

Fire & Sound classification

Cables ≤ Ø21mm, single or in a bundle and PVC conduits ≤ Ø16mm
EI 120 & E 240

Cables ≤ Ø21mm and PVC conduits ≤ Ø16mm
EI 180 & E 240

Sound reduction (seal only)
52 dB

Polyseam Ltd, 15 St Andrews Road, Huddersfield, West Yorkshire, HD1 6SB
Tel: +44 (0) 148 4421036
Email: post.uk@polyseam.com

Sheet size: **A4**	Drawn date & no: 20/4/15
Scale: **NTS**	Drawn by: K.B

Installation Instructions

1. Before installing Protecta® FR Board ensure that the surface of all service penetrations and surrounding construction is free from all loose contaminants, dust and grease.
2. The boards should be flush with the surface of the construction on both sides to maximize the fire resistance.
3. Cut the required board(s) to suit the aperture dimensions and type and size of service penetration(s). All exposed and cut edges of the board can be sealed with Protecta® FR Coating or Protecta® FR Acrylic prior to fitting which will act as an adhesive and ensure a smoke tight seal.
4. All joints, gaps or imperfections in the installed seal must be filled with Protecta® FR Acrylic on both sides.
5. Protecta® FR Board can be over-painted with most emulsion or alkyd (gloss) paints.

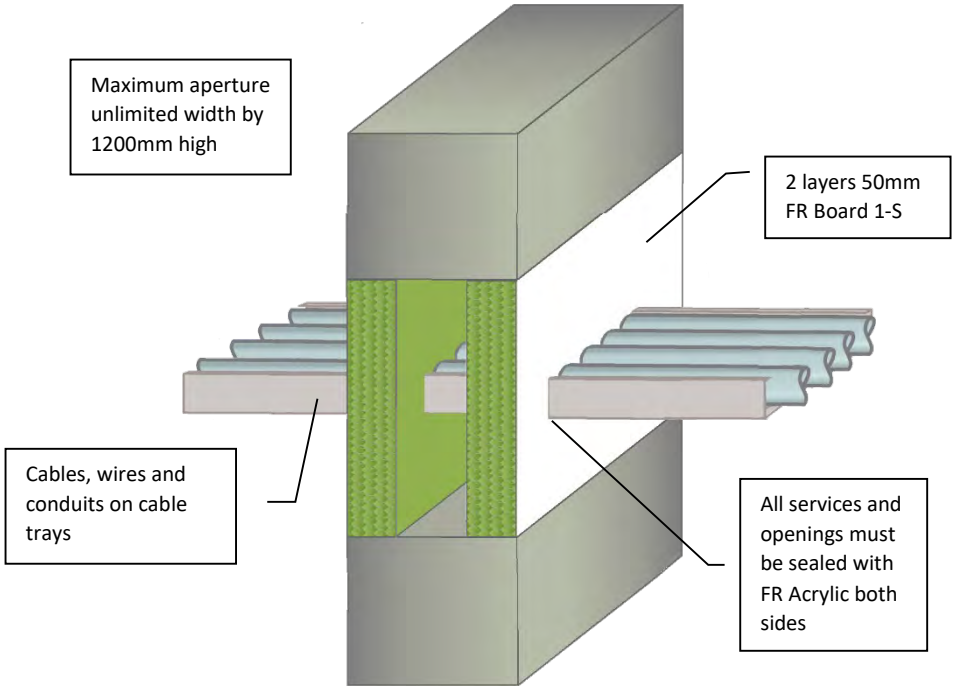

Minimum separations and limitations

An aperture can include several services, and they may also be different. The minimum permitted separation between adjacent seals/apertures is 200mm. Services should be a minimum of 25mm from seal edges. Services within the system Protecta® FR Board seal do not require a minimum separation, except pipes where pipe insulation penetrates the seal and plastic pipe penetrations which should be a minimum of 30 mm from other services in the aperture. The total amount of cross sections of services (including insulation) should not exceed 60% of the penetration area.

ETA 13/0673 & 18/0855

For all technical details on the products specified please refer to the technical data sheets that can be found on www.protecta.eu

Signed and approved:

Client:

Job Title:

Products	Protecta FR Board Protecta FR Acrylic
Application	Fire stopping of cables, wires and conduits on cable trays in rigid walls
Construction	Minimum wall thickness of 100 mm and comprise concrete, aerated concrete or masonry, with a density of ≥ 650 kg/m^3

Fire & Sound classification

Cables ≤ Ø80mm single or bundled, wires 185mm^2 and steel or PVC conduits ≤ Ø16mm on trays

EI 60 & E 60

Sound reduction (seal only)

52 dB

Polyseam Ltd, 15 St Andrews Road, Huddersfield, West Yorkshire, HD1 6SB
Tel: +44 (0) 148 4421036
Email: post.uk@polyseam.com

Sheet size: **A4**	Drawn date & no: 6/3/19
Scale: **NTS**	Drawn by: K.B

Installation Instructions

1. Before installing Protecta® FR Board ensure that the surface of all service penetrations and surrounding construction is free from all loose contaminants, dust and grease.
2. The boards should be flush with the surface of the construction on both sides to maximize the fire resistance. If this is not possible, there should be an air gap of at least 30mm between the boards.
3. Cut the required board(s) to suit the aperture dimensions and type and size of service penetration(s). All exposed and cut edges of the board can be sealed with Protecta® FR Coating or Protecta® FR Acrylic prior to fitting which will act as an adhesive and ensure a smoke tight seal.
4. All joints, gaps or imperfections in the installed seal must be filled with Protecta® FR Acrylic on both sides.
5. Protecta® FR Board can be over-painted with most emulsion or alkyd (gloss) paints.

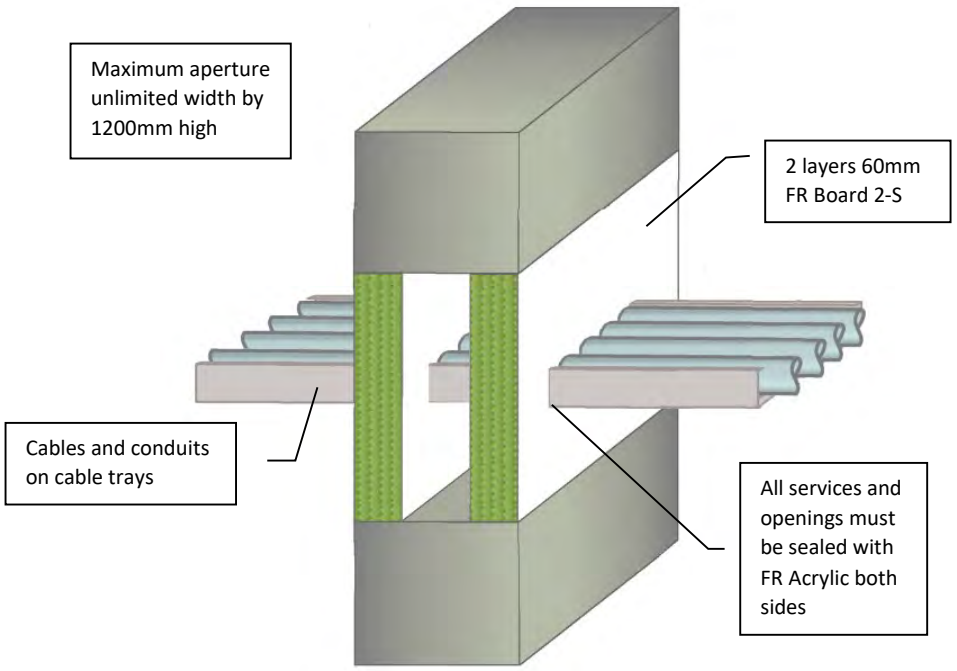

Minimum separations and limitations

An aperture can include several services, and they may also be different. The minimum permitted separation between adjacent seals/apertures is 200mm. Services should be a minimum of 25mm from seal edges. Services within the system Protecta® FR Board seal do not require a minimum separation, except pipes where pipe insulation penetrates the seal and plastic pipe penetrations which should be a minimum of 30 mm from other services in the aperture. The total amount of cross sections of services (including insulation) should not exceed 60% of the penetration area.

ETA 13/0673 & 18/0855

For all technical details on the products specified please refer to the technical data sheets that can be found on www.protecta.eu

Signed and approved:

Client:

Job Title:

Products	Protecta FR Board Protecta FR Acrylic
Application	Fire stopping of cables and conduits on cable trays in rigid walls
Construction	Minimum wall thickness of 150 mm and comprise concrete, aerated concrete or masonry, with a density of ≥ 650 kg/m³

Fire & Sound classification

Cables ≤ Ø21mm in tied bundles ≤ Ø100mm and PVC conduits ≤ Ø16mm on ≤ 200 mm ladders or ≤ 500 mm non-perforated trays
EI 120 & E 180

Cables ≤ Ø80mm, single, bundled and on trays
EI 60 & E 180

Sound reduction (seal only)
52 dB

Polyseam Ltd, 15 St Andrews Road, Huddersfield, West Yorkshire, HD1 6SB
Tel: +44 (0) 148 4421036
Email: post.uk@polyseam.com

Sheet size: **A4**	Drawn date & no: 20/4/15
Scale: **NTS**	Drawn by: K.B

Installation Instructions

1. Before installing Protecta® FR Board ensure that the surface of all service penetrations and surrounding construction is free from all loose contaminants, dust and grease.
2. Cut the required board(s) to suit the aperture dimensions and type and size of service penetration(s). All exposed and cut edges of the board can be sealed with Protecta® FR Coating or Protecta® FR Acrylic prior to fitting which will act as an adhesive and ensure a smoke tight seal.
3. All joints, gaps or imperfections in the installed seal must be filled with Protecta® FR Acrylic on both sides.
4. Protecta® FR Board can be over-painted with most emulsion or alkyd (gloss) paints.

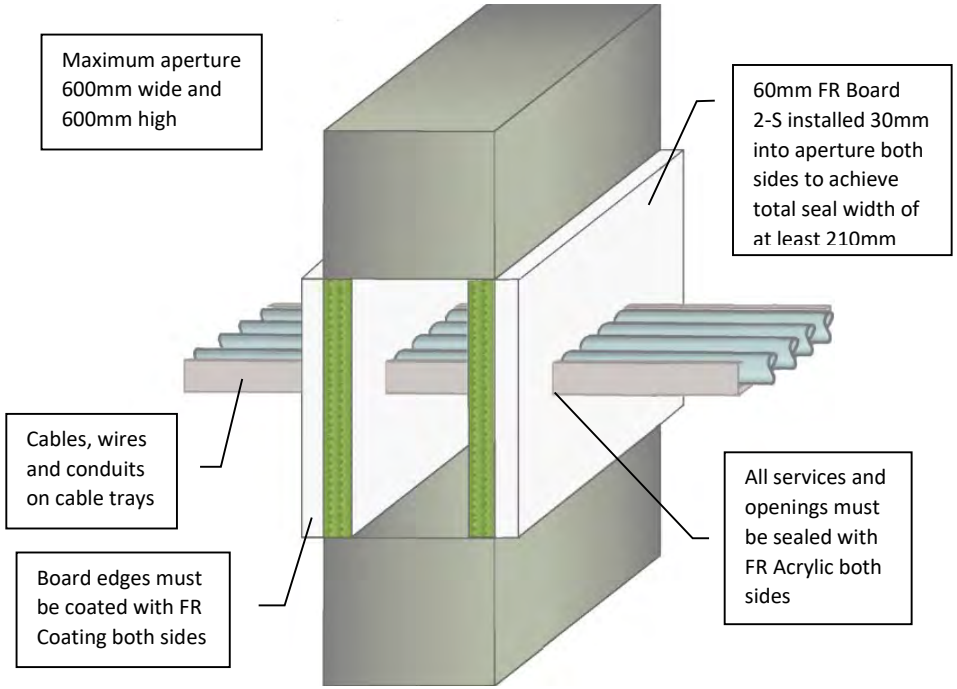

Minimum separations and limitations

An aperture can include several services, and they may also be different. The minimum permitted separation between adjacent seals/apertures is 200mm. Services should be a minimum of 25mm from seal edges. Services within the system Protecta® FR Board seal do not require a minimum separation, except pipes where pipe insulation penetrates the seal and plastic pipe penetrations which should be a minimum of 30 mm from other services in the aperture. The total amount of cross sections of services (including insulation) should not exceed 60% of the penetration area.

ETA 13/0673 & 18/0855

Client:

Job Title:

Products	Protecta FR Board Protecta FR Acrylic Protecta FR Coating
Application	Fire stopping of cables, wires and conduits on cable trays in rigid walls
Construction	Minimum wall thickness of 150 mm and comprise concrete, aerated concrete or masonry, with a density of ≥ 650 kg/m³

Fire & Sound classification

Cables ≤ Ø21mm in tied bundles ≤ Ø100mm on trays	EI 240 & E 240
Cables ≤ Ø21mm, single, bundled and wires ≤ 95mm² on trays	EI 120 & E 240
Cables ≤ Ø80mm, single, bundled and wires ≤ 185mm² on trays	EI 60 & E 240
Sound reduction (seal only)	53 dB

Polyseam Ltd, 15 St Andrews Road, Huddersfield, West Yorkshire, HD1 6SB
Tel: +44 (0) 148 4421036
Email: post.uk@polyseam.com

For all technical details on the products specified please refer to the technical data sheets that can be found on www.protecta.eu

Signed and approved:

Sheet size: **A4**	Drawn date & no: 20/4/15
Scale: **NTS**	Drawn by: K.B

Installation Instructions

1. Before installing Protecta® FR Board ensure that the surface of all service penetrations and surrounding construction is free from all loose contaminants, dust and grease.
2. Cut the required board(s) to suit the aperture dimensions and type and size of service penetration(s). All exposed and cut edges of the board can be sealed with Protecta® FR Coating or Protecta® FR Acrylic prior to fitting which will act as an adhesive and ensure a smoke tight seal.
3. All joints, gaps or imperfections in the installed seal must be filled with Protecta® FR Acrylic on both sides.
4. Protecta® FR Board can be over-painted with most emulsion or alkyd (gloss) paints.

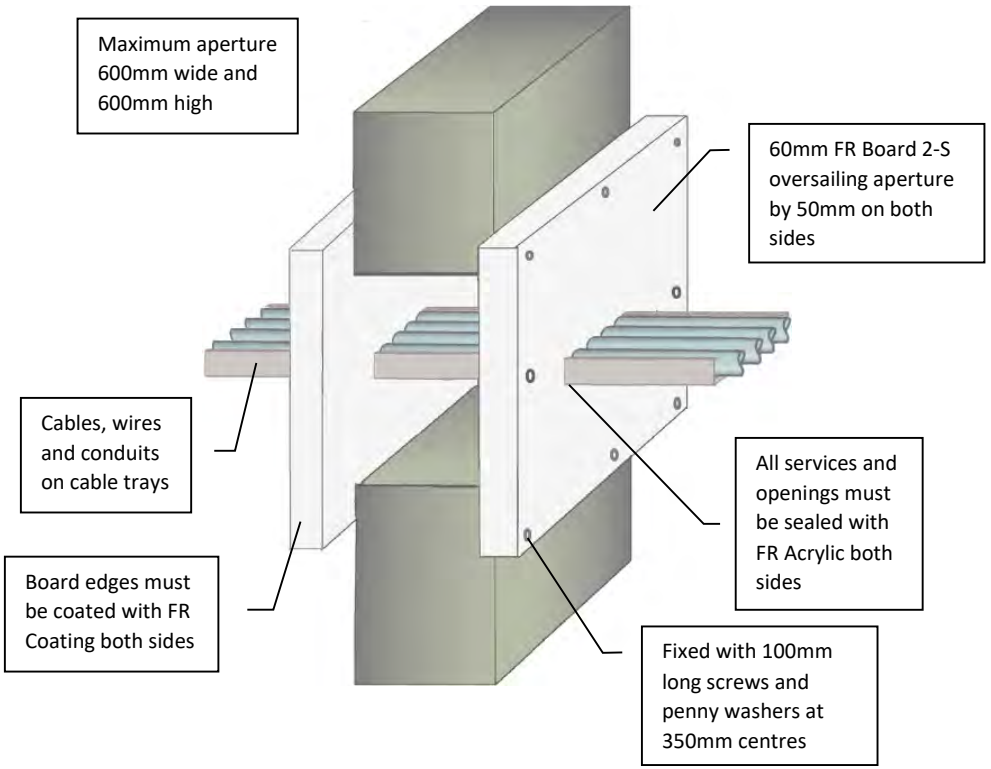

Minimum separations and limitations

An aperture can include several services, and they may also be different. The minimum permitted separation between adjacent seals/apertures is 200mm. Services should be a minimum of 25mm from seal edges. Services within the system Protecta® FR Board seal do not require a minimum separation, except pipes where pipe insulation penetrates the seal and plastic pipe penetrations which should be a minimum of 30 mm from other services in the aperture. The total amount of cross sections of services (including insulation) should not exceed 60% of the penetration area.

ETA 13/0673 & 18/0855

For all technical details on the products specified please refer to the technical data sheets that can be found on www.protecta.eu

Signed and approved:

Client:

Job Title:

Products	Protecta FR Board Protecta FR Acrylic Protecta FR Coating
Application	Fire stopping of cables, wires and conduits on cable trays in rigid walls
Construction	Minimum wall thickness of 150 mm and comprise concrete, aerated concrete or masonry, with a density of ≥ 650 kg/m³

Fire & Sound classification

Cables ≤ Ø21mm in tied bundles ≤ Ø100mm on trays	EI 240 & E 240
Cables ≤ Ø50mm, single, bundled and wires ≤ 185mm² on trays	EI 90 & E 240
Cables ≤ Ø80mm, single, bundled and on trays	EI 60 & E 240
Sound reduction (seal only)	53 dB

Polyseam Ltd, 15 St Andrews Road, Huddersfield, West Yorkshire, HD1 6SB
Tel: +44 (0) 148 4421036
Email: post.uk@polyseam.com

Sheet size: **A4**	Drawn date & no: 20/4/15
Scale: **NTS**	Drawn by: K.B

Installation Instructions

1. Before installing Protecta® FR Board ensure that the surface of all service penetrations and surrounding construction is free from all loose contaminants, dust and grease.
2. Protecta® FR Coating and Protecta® FR Acrylic are water based, so in cases where corrosion protection is a problem, some metals may require a barrier between the seal and the surface prior to this installation.
3. The boards should be flush with the surface of the construction on both sides to maximize the fire resistance.
4. Cut the required board(s) to suit the aperture dimensions and type and size of service penetration(s). All exposed and cut edges of the board can be sealed with Protecta® FR Coating or Protecta® FR Acrylic prior to fitting which will act as an adhesive and ensure a smoke tight seal.
5. All joints, gaps or imperfections in the installed seal must be filled with Protecta® FR Acrylic on both sides.
6. Protecta® FR Board can be over-painted with most emulsion or alkyd (gloss) paints.

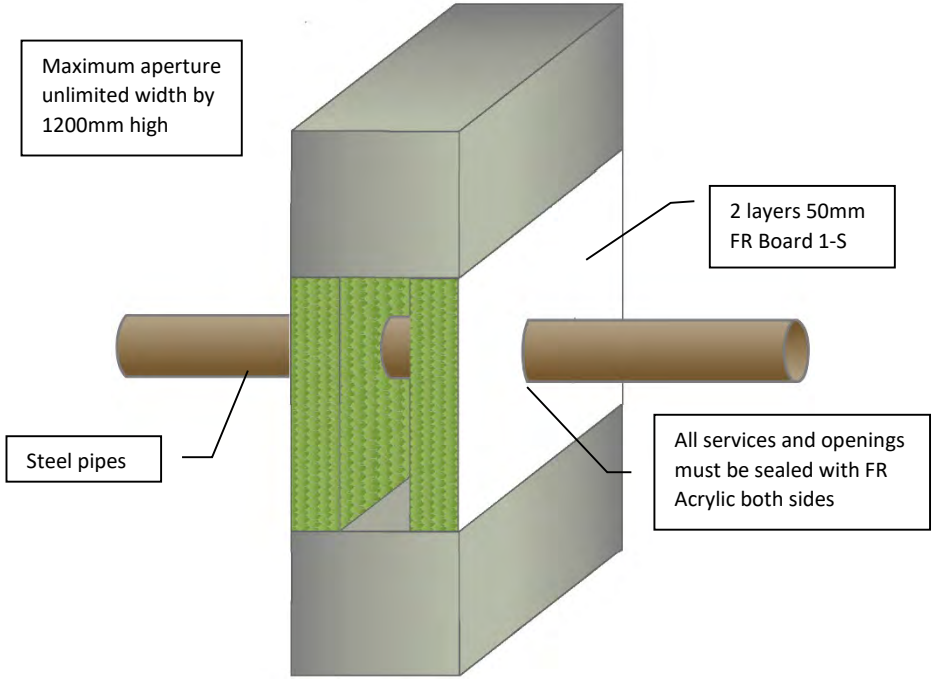

Minimum separations and limitations

An aperture can include several services, and they may also be different. The minimum permitted separation between adjacent seals/apertures is 200mm. Services should be a minimum of 25mm from seal edges. Services within the system Protecta® FR Board seal do not require a minimum separation, except pipes where pipe insulation penetrates the seal and plastic pipe penetrations which should be a minimum of 30 mm from other services in the aperture. The total amount of cross sections of services (including insulation) should not exceed 60% of the penetration area.

ETA 13/0673 & 18/0855

For all technical details on the products specified please refer to the technical data sheets that can be found on www.protecta.eu

Signed and approved:

Client:

Job Title:

Products	Protecta FR Board Protecta FR Acrylic
Application	Fire stopping of un-insulated steel pipes in rigid walls
Construction	Minimum wall thickness of 100 mm and comprise concrete, aerated concrete or masonry, with a density of ≥ 650 kg/m³

Fire & Sound classification

Steel pipes ≤ Ø22mm
EI 60 C/U & E 120 C/U

Steel pipes ≤ Ø114mm
EI 20 C/U & E 90 C/U

Sound reduction (seal only)
52 dB

Polyseam Ltd, 15 St Andrews Road, Huddersfield, West Yorkshire, HD1 6SB
Tel: +44 (0) 148 4421036
Email: post.uk@polyseam.com

Sheet size: **A4**	Drawn date & no: 26/7/17
Scale: **NTS**	Drawn by: K.B

Installation Instructions

1. Before installing Protecta® FR Board ensure that the surface of all service penetrations and surrounding construction is free from all loose contaminants, dust and grease.
2. The board can be positioned to either side of the construction or anywhere in between.
3. Cut the required board(s) to suit the aperture dimensions and type and size of service penetration(s). All exposed and cut edges of the board can be sealed with Protecta® FR Coating or Protecta® FR Acrylic prior to fitting which will act as an adhesive and ensure a smoke tight seal.
4. All joints, gaps or imperfections in the installed seal must be filled with Protecta® FR Acrylic on both sides.
5. Protecta® FR Board can be over-painted with most emulsion or alkyd (gloss) paints.

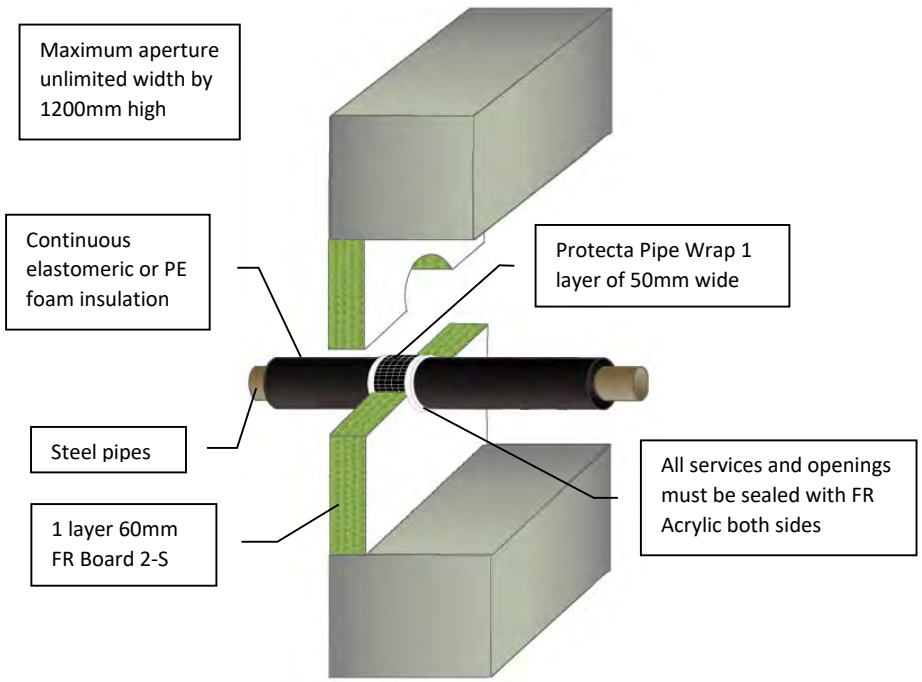

Minimum separations and limitations

An aperture can include several services, and they may also be different. The minimum permitted separation between adjacent seals/apertures is 200mm. Services should be a minimum of 25mm from seal edges. Services within the system Protecta® FR Board seal do not require a minimum separation, except pipes where pipe insulation penetrates the seal and plastic pipe penetrations which should be a minimum of 30 mm from other services in the aperture. The total amount of cross sections of services (including insulation) should not exceed 60% of the penetration area.

ETA 13/0673 & 18/0855

For all technical details on the products specified please refer to the technical data sheets that can be found on www.protecta.eu

Signed and approved:

Client:

Job Title:

Products	Protecta FR Board Protecta FR Acrylic Protecta FR Pipe Wrap 25m
Application	Fire stopping of insulated steel pipes in rigid walls
Construction	Minimum wall thickness of 150 mm and comprise concrete, aerated concrete or masonry, with a density of ≥ 650 kg/m³

Fire & Sound classification

Steel pipes ≤ Ø165mm with 9 - 25mm continuous foam insulation

EI 45 U/C & E 120 U/C

Sound reduction (seal only)

29 dB

Polyseam Ltd, 15 St Andrews Road, Huddersfield, West Yorkshire, HD1 6SB
Tel: +44 (0) 148 4421036
Email: post.uk@polyseam.com

Sheet size: **A4**	Drawn date & no: 5/3/19
Scale: **NTS**	Drawn by: K.B

Installation Instructions

1. Before installing Protecta® FR Board ensure that the surface of all service penetrations and surrounding construction is free from all loose contaminants, dust and grease.
2. The boards should be flush with the surface of the construction on both sides to maximize the fire resistance.
3. Cut the required board(s) to suit the aperture dimensions and type and size of service penetration(s). All exposed and cut edges of the board can be sealed with Protecta® FR Coating or Protecta® FR Acrylic prior to fitting which will act as an adhesive and ensure a smoke tight seal.
4. All joints, gaps or imperfections in the installed seal must be filled with Protecta® FR Acrylic on both sides.
5. Protecta® FR Board can be over-painted with most emulsion or alkyd (gloss) paints.

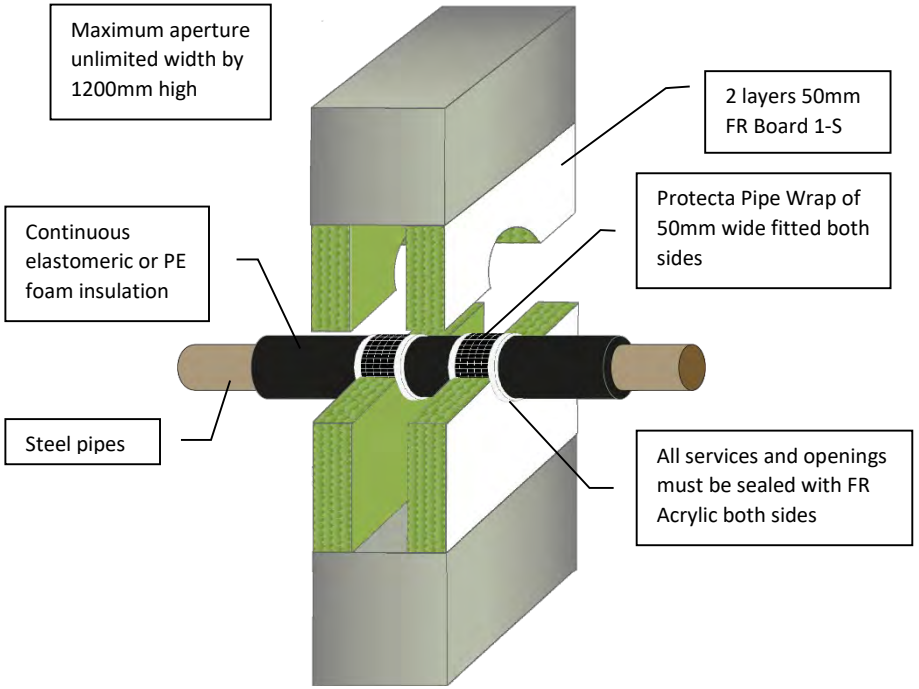

Minimum separations and limitations

An aperture can include several services, and they may also be different. The minimum permitted separation between adjacent seals/apertures is 200mm. Services should be a minimum of 25mm from seal edges. Services within the system Protecta® FR Board seal do not require a minimum separation, except pipes where pipe insulation penetrates the seal and plastic pipe penetrations which should be a minimum of 30 mm from other services in the aperture. The total amount of cross sections of services (including insulation) should not exceed 60% of the penetration area.

ETA 13/0673 & 18/0855

As a part of our policy of on-going product development and testing, we reserve the right to modify, alter or change product specifications without giving notice. All information contained in this document is given in good faith and is provided for guidance only. Any drawings provided are for illustrative purposes only. As Polyseam has no control over the methods or competence of installation and of prevailing site conditions, no warranties, expressed or implied, is intended to be given as to the actual performance of the product mentioned or referred to herein and no liability whatsoever will be accepted for any loss, damage or injury arising from the use of the information given.

For all technical details on the products specified please refer to the technical data sheets that can be found on www.protecta.eu

Signed and approved:

Client:

Job Title:

Products	Protecta FR Board Protecta FR Acrylic Protecta FR Pipe Wrap 25m
Application	Fire stopping of insulated steel pipes in rigid walls
Construction	Minimum wall thickness of 100 mm and comprise concrete, aerated concrete or masonry, with a density of ≥ 650 kg/m³

Fire & Sound classification

Steel pipes ≤ Ø40mm with 13mm continuous foam insulation and 2 layers of pipe wrap
EI 120 U/U & E 120 U/U

Steel pipes ≤ Ø165mm with 13 - 32mm continuous foam insulation and 2 layers of pipe wrap
EI 60 U/U & E 120 U/U

Steel pipes ≤ Ø324mm with 32 - 50mm continuous foam insulation and 3 layers of pipe wrap
EI 90 C/U & E 90 C/U

Sound reduction (seal only) 52 dB

Protecta®

Polyseam Ltd, 15 St Andrews Road, Huddersfield, West Yorkshire, HD1 6SB
Tel: +44 (0) 148 4421036
Email: post.uk@polyseam.com

Sheet size: **A4**	Drawn date & no: 18/3/19
Scale: **NTS**	Drawn by: K.B

Installation Instructions

1. Before installing Protecta® FR Board ensure that the surface of all service penetrations and surrounding construction is free from all loose contaminants, dust and grease.
2. The board can be positioned to either side of the construction or anywhere in between.
3. Cut the required board(s) to suit the aperture dimensions and type and size of service penetration(s). All exposed and cut edges of the board can be sealed with Protecta® FR Coating or Protecta® FR Acrylic prior to fitting which will act as an adhesive and ensure a smoke tight seal.
4. All joints, gaps or imperfections in the installed seal must be filled with Protecta® FR Acrylic on both sides.
5. Protecta® FR Board can be over-painted with most emulsion or alkyd (gloss) paints.

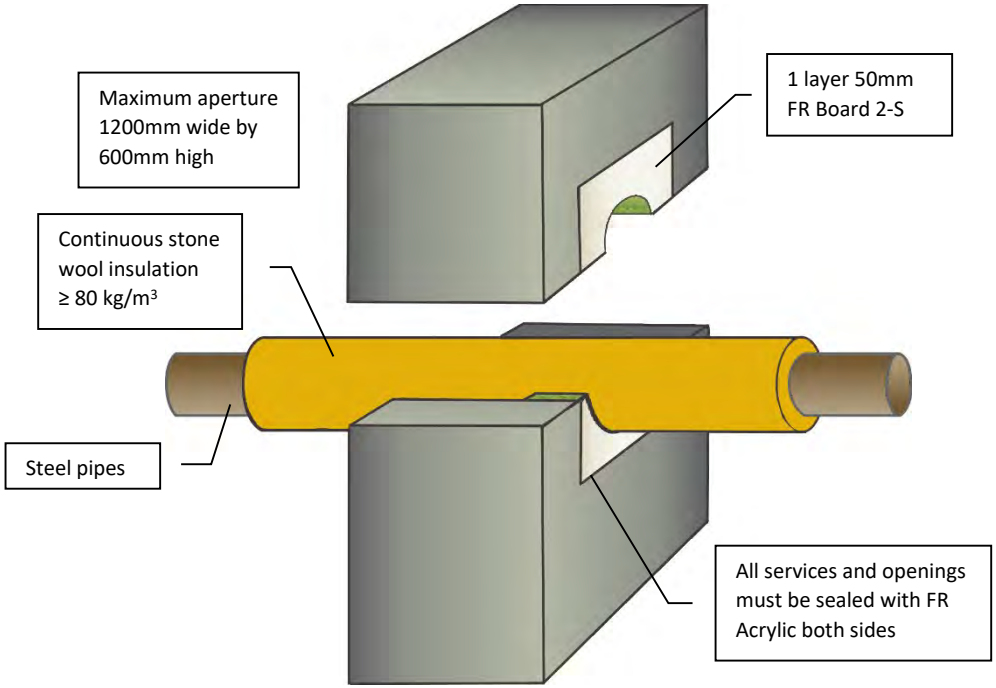

Minimum separations and limitations

An aperture can include several services, and they may also be different. The minimum permitted separation between adjacent seals/apertures is 200mm. Services should be a minimum of 25mm from seal edges. Services within the system Protecta® FR Board seal do not require a minimum separation, except pipes where pipe insulation penetrates the seal and plastic pipe penetrations which should be a minimum of 30 mm from other services in the aperture. The total amount of cross sections of services (including insulation) should not exceed 60% of the penetration area.

ETA 13/0673 & 18/0855

For all technical details on the products specified please refer to the technical data sheets that can be found on www.protecta.eu

Signed and approved:

Client:

Job Title:

Products	Protecta FR Board Protecta FR Acrylic
Application	Fire stopping of insulated steel pipes in rigid walls
Construction	Minimum wall thickness of 100 mm and comprise concrete, aerated concrete or masonry, with a density of ≥ 650 kg/m³

Fire & Sound classification

Steel pipes ≤ Ø324mm with 20-30mm continuous stone wool insulation
EI 60 C/U & E 90 C/U

Sound reduction (seal only)
29 dB

Polyseam Ltd, 15 St Andrews Road, Huddersfield, West Yorkshire, HD1 6SB
Tel: +44 (0) 148 4421036
Email: post.uk@polyseam.com

Sheet size: **A4**	Drawn date & no: 20/4/15
Scale: **NTS**	Drawn by: K.B

Installation Instructions

1. Before installing Protecta® FR Board ensure that the surface of all service penetrations and surrounding construction is free from all loose contaminants, dust and grease.
2. The board can be positioned to either side of the construction or anywhere in between.
3. Cut the required board(s) to suit the aperture dimensions and type and size of service penetration(s). All exposed and cut edges of the board can be sealed with Protecta® FR Coating or Protecta® FR Acrylic prior to fitting which will act as an adhesive and ensure a smoke tight seal.
4. All joints, gaps or imperfections in the installed seal must be filled with Protecta® FR Acrylic on both sides.
5. Protecta® FR Board can be over-painted with most emulsion or alkyd (gloss) paints.

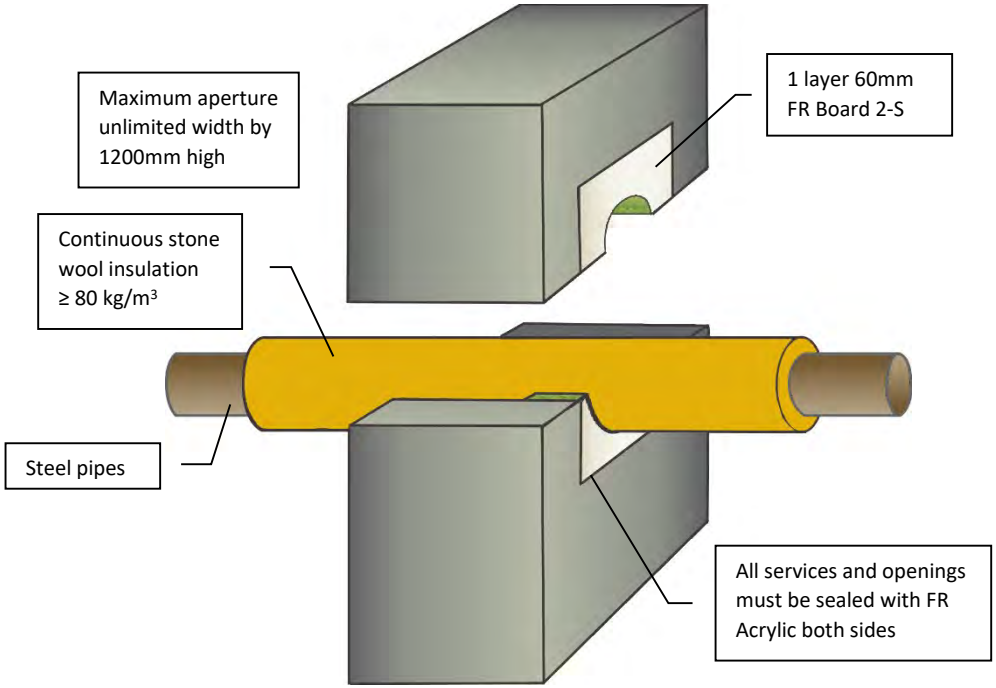

Minimum separations and limitations

An aperture can include several services, and they may also be different. The minimum permitted separation between adjacent seals/apertures is 200mm. Services should be a minimum of 25mm from seal edges. Services within the system Protecta® FR Board seal do not require a minimum separation, except pipes where pipe insulation penetrates the seal and plastic pipe penetrations which should be a minimum of 30 mm from other services in the aperture. The total amount of cross sections of services (including insulation) should not exceed 60% of the penetration area.

ETA 13/0673 & 18/0855

For all technical details on the products specified please refer to the technical data sheets that can be found on www.protecta.eu

Signed and approved:

Client:

Job Title:

Products	Protecta FR Board Protecta FR Acrylic
Application	Fire stopping of insulated steel pipes in rigid walls
Construction	Minimum wall thickness of 150 mm and comprise concrete, aerated concrete or masonry, with a density of ≥ 650 kg/m³

Fire & Sound classification

Steel pipes ≤ Ø219mm with 30mm continuous stone wool insulation
EI 60 C/U & E 240 C/U

Steel pipes Ø325mm with 30mm continuous stone wool insulation
EI 90 C/U & E 120 C/U

Sound reduction (seal only)
29 dB

Polyseam Ltd, 15 St Andrews Road, Huddersfield, West Yorkshire, HD1 6SB
Tel: +44 (0) 148 4421036
Email: post.uk@polyseam.com

Sheet size: **A4**	Drawn date & no: 26/7/17
Scale: **NTS**	Drawn by: K.B

Installation Instructions

1. Before installing Protecta® FR Board ensure that the surface of all service penetrations and surrounding construction is free from all loose contaminants, dust and grease.
2. Protecta® FR Coating and Protecta® FR Acrylic are water based, so in cases where corrosion protection is a problem, some metals may require a barrier between the seal and the surface prior to this installation.
3. The boards should be flush with the surface of the construction on both sides to maximize the fire resistance.
4. Cut the required board(s) to suit the aperture dimensions and type and size of service penetration(s). All exposed and cut edges of the board can be sealed with Protecta® FR Coating or Protecta® FR Acrylic prior to fitting which will act as an adhesive and ensure a smoke tight seal.
5. All joints, gaps or imperfections in the installed seal must be filled with Protecta® FR Acrylic on both sides.
6. Protecta® FR Board can be over-painted with most emulsion or alkyd (gloss) paints.

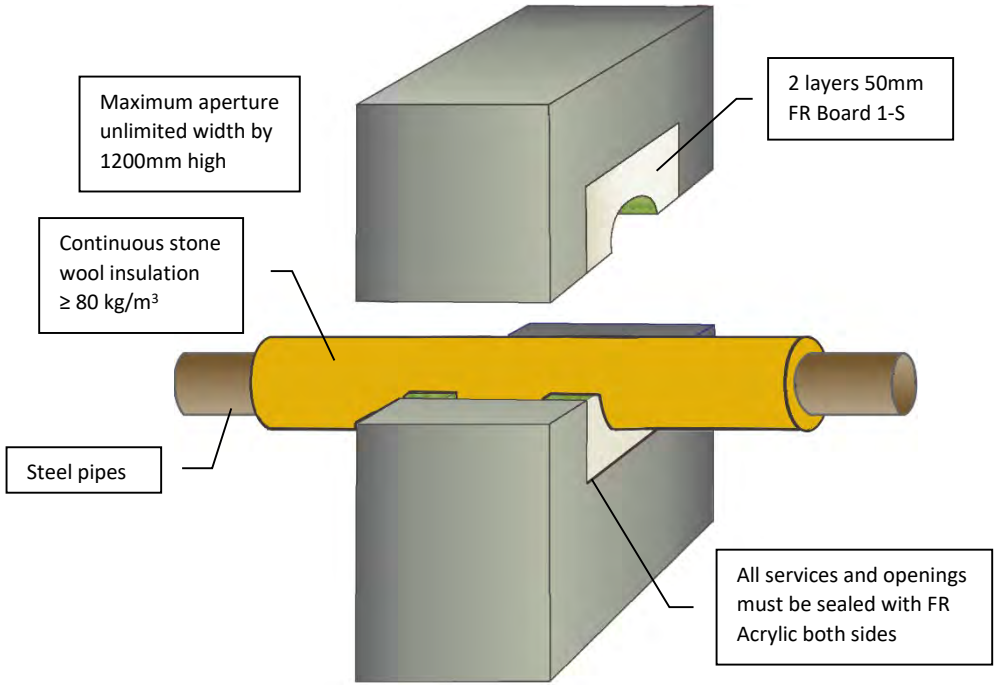

Minimum separations and limitations

An aperture can include several services, and they may also be different. The minimum permitted separation between adjacent seals/apertures is 200mm. Services should be a minimum of 25mm from seal edges. Services within the system Protecta® FR Board seal do not require a minimum separation, except pipes where pipe insulation penetrates the seal and plastic pipe penetrations which should be a minimum of 30 mm from other services in the aperture. The total amount of cross sections of services (including insulation) should not exceed 60% of the penetration area.

ETA 13/0673 & 18/0855

For all technical details on the products specified please refer to the technical data sheets that can be found on www.protecta.eu

Signed and approved:

Client:

Job Title:

Products	Protecta FR Board Protecta FR Acrylic
Application	Fire stopping of insulated steel pipes in rigid walls
Construction	Minimum wall thickness of 100 mm and comprise concrete, aerated concrete or masonry, with a density of ≥ 650 kg/m³

Fire & Sound classification

Steel pipes ≤ Ø324mm with 20-80mm continuous stone wool insulation
EI 120 C/U & E 120 C/U

Sound reduction (seal only)
52 dB

Polyseam Ltd, 15 St Andrews Road, Huddersfield, West Yorkshire, HD1 6SB
Tel: +44 (0) 148 4421036
Email: post.uk@polyseam.com

Sheet size: **A4**	Drawn date & no: 16/1/17
Scale: **NTS**	Drawn by: K.B

Installation Instructions

1. Before installing Protecta® FR Board ensure that the surface of all service penetrations and surrounding construction is free from all loose contaminants, dust and grease.
2. Protecta® FR Coating and Protecta® FR Acrylic are water based, so in cases where corrosion protection is a problem, some metals may require a barrier between the seal and the surface prior to this installation.
3. The boards should be flush with the surface of the construction on both sides to maximize the fire resistance. If this is not possible, there should be an air gap of at least 30mm between the boards.
4. Cut the required board(s) to suit the aperture dimensions and type and size of service penetration(s). All exposed and cut edges of the board can be sealed with Protecta® FR Coating or Protecta® FR Acrylic prior to fitting which will act as an adhesive and ensure a smoke tight seal.
5. All joints, gaps or imperfections in the installed seal must be filled with Protecta® FR Acrylic on both sides.
6. Protecta® FR Board can be over-painted with most emulsion or alkyd (gloss) paints.

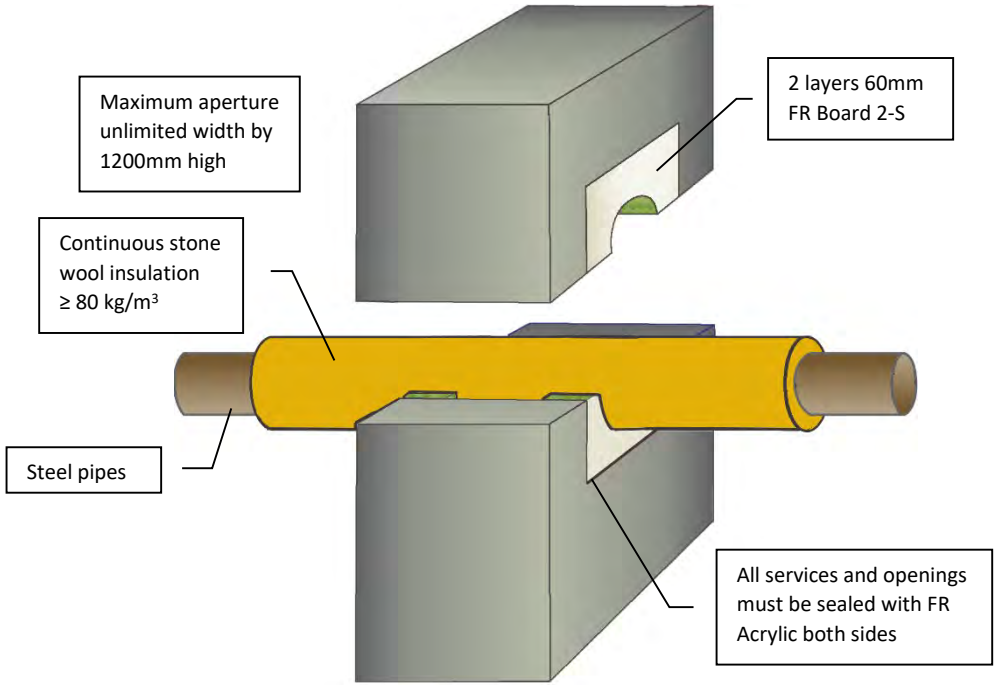

Minimum separations and limitations

An aperture can include several services, and they may also be different. The minimum permitted separation between adjacent seals/apertures is 200mm. Services should be a minimum of 25mm from seal edges. Services within the system Protecta® FR Board seal do not require a minimum separation, except pipes where pipe insulation penetrates the seal and plastic pipe penetrations which should be a minimum of 30 mm from other services in the aperture. The total amount of cross sections of services (including insulation) should not exceed 60% of the penetration area.

ETA 13/0673 & 18/0855

For all technical details on the products specified please refer to the technical data sheets that can be found on www.protecta.eu

Signed and approved:

Client:

Job Title:

Products	Protecta FR Board Protecta FR Acrylic
Application	Fire stopping of insulated steel pipes in rigid walls
Construction	Minimum wall thickness of 150 mm and comprise concrete, aerated concrete or masonry, with a density of ≥ 650 kg/m³

Fire & Sound classification

Steel pipes ≤ Ø324mm with 20-80mm continuous stone wool insulation
EI 180 C/U & E 240 C/U

Sound reduction (seal only)
52 dB

Polyseam Ltd, 15 St Andrews Road, Huddersfield, West Yorkshire, HD1 6SB
Tel: +44 (0) 148 4421036
Email: post.uk@polyseam.com

Sheet size: **A4**	Drawn date & no: 9/1/17
Scale: **NTS**	Drawn by: K.B

Installation Instructions

1. Before installing Protecta® FR Board ensure that the surface of all service penetrations and surrounding construction is free from all loose contaminants, dust and grease.
2. Protecta® FR Coating and Protecta® FR Acrylic are water based, so in cases where corrosion protection is a problem, some metals may require a barrier between the seal and the surface prior to this installation.
3. The board can be positioned to either side of the construction or anywhere in between.
4. Cut the required board(s) to suit the aperture dimensions and type and size of service penetration(s). All exposed and cut edges of the board can be sealed with Protecta® FR Coating or Protecta® FR Acrylic prior to fitting which will act as an adhesive and ensure a smoke tight seal.
5. All joints, gaps or imperfections in the installed seal must be filled with Protecta® FR Acrylic on both sides.
6. Protecta® FR Board can be over-painted with most emulsion or alkyd (gloss) paints.

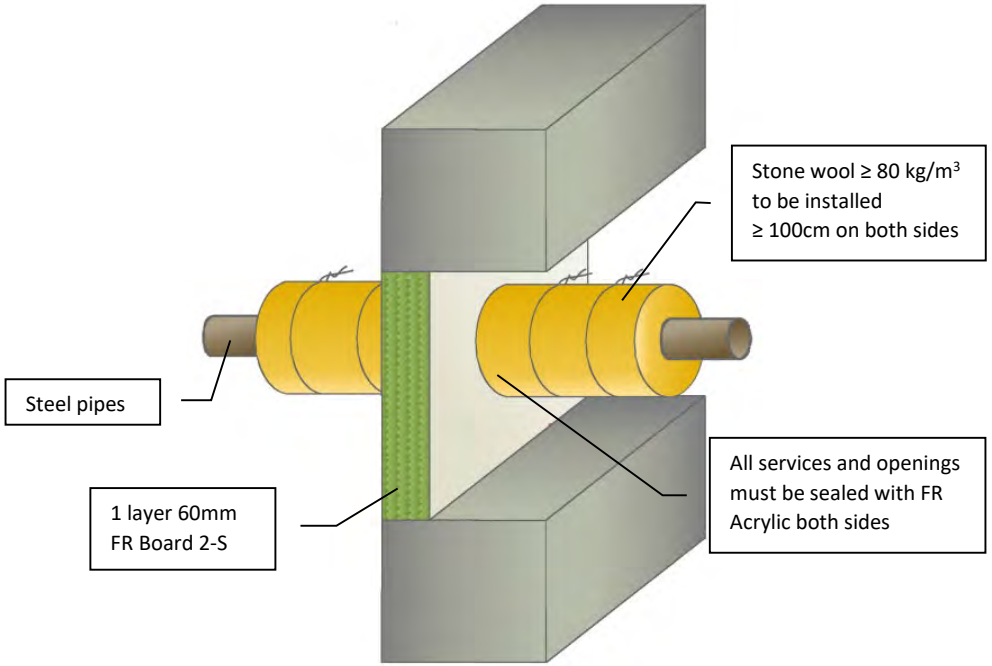

Minimum separations and limitations

An aperture can include several services, and they may also be different. The minimum permitted separation between adjacent seals/apertures is 200mm. Services should be a minimum of 25mm from seal edges. Services within the system Protecta® FR Board seal do not require a minimum separation, except pipes where pipe insulation penetrates the seal and plastic pipe penetrations which should be a minimum of 30 mm from other services in the aperture. The total amount of cross sections of services (including insulation) should not exceed 60% of the penetration area.

ETA 13/0673 & 18/0855

As a part of our policy of on-going product development and testing, we reserve the right to modify, alter or change product specifications without giving notice. All information contained in this document is given in good faith and is provided for guidance only. Any drawings provided are for illustrative purposes only. As Polyseam has no control over the methods or competence of installation and of prevailing site conditions, no warranties, expressed or implied, is intended to be given as to the actual performance of the product mentioned or referred to herein and no liability whatsoever will be accepted for any loss, damage or injury arising from the use of the information given.

For all technical details on the products specified please refer to the technical data sheets that can be found on www.protecta.eu

Signed and approved:

Client:

Job Title:

Products	Protecta FR Board Protecta FR Acrylic
Application	Fire stopping of insulated steel pipes in rigid walls
Construction	Minimum wall thickness of 150 mm and comprise concrete, aerated concrete or masonry, with a density of ≥ 650 kg/m³

Fire & Sound classification

Steel pipes ≤ Ø40mm with ≥ 20mm stone wool insulation in maximum aperture 280mm wide and 280mm high EI 240 C/U & E 240 C/U
Steel pipes ≤ Ø40mm with ≥ 20mm stone wool insulation in maximum aperture unlimited width by 1200mm high EI 90 C/U & E 240 C/U
Steel pipes ≤ Ø219mm with ≥ 30mm stone wool insulation in maximum aperture 280mm wide and 280mm high EI 240 C/U & E 240 C/U
Steel pipes ≤ Ø219mm with ≥ 30mm stone wool insulation in maximum aperture unlimited width by 1200mm high EI 90 C/U & E 240 C/U

Sound reduction (seal only) 29 dB

Polyseam Ltd, 15 St Andrews Road, Huddersfield, West Yorkshire, HD1 6SB
Tel: +44 (0) 148 4421036
Email: post.uk@polyseam.com

Sheet size: **A4**	Drawn date & no: 20/4/15
Scale: **NTS**	Drawn by: K.B

Installation Instructions

1. Before installing Protecta® FR Board ensure that the surface of all service penetrations and surrounding construction is free from all loose contaminants, dust and grease.
2. Protecta® FR Coating and Protecta® FR Acrylic are water based, so in cases where corrosion protection is a problem, some metals may require a barrier between the seal and the surface prior to this installation.
3. The boards should be flush with the surface of the construction on both sides to maximize the fire resistance. If this is not possible, there should be an air gap of at least 30mm between the boards.
4. Cut the required board(s) to suit the aperture dimensions and type and size of service penetration(s). All exposed and cut edges of the board can be sealed with Protecta® FR Coating or Protecta® FR Acrylic prior to fitting which will act as an adhesive and ensure a smoke tight seal.
5. All joints, gaps or imperfections in the installed seal must be filled with Protecta® FR Acrylic on both sides.
6. Protecta® FR Board can be over-painted with most emulsion or alkyd (gloss) paints.

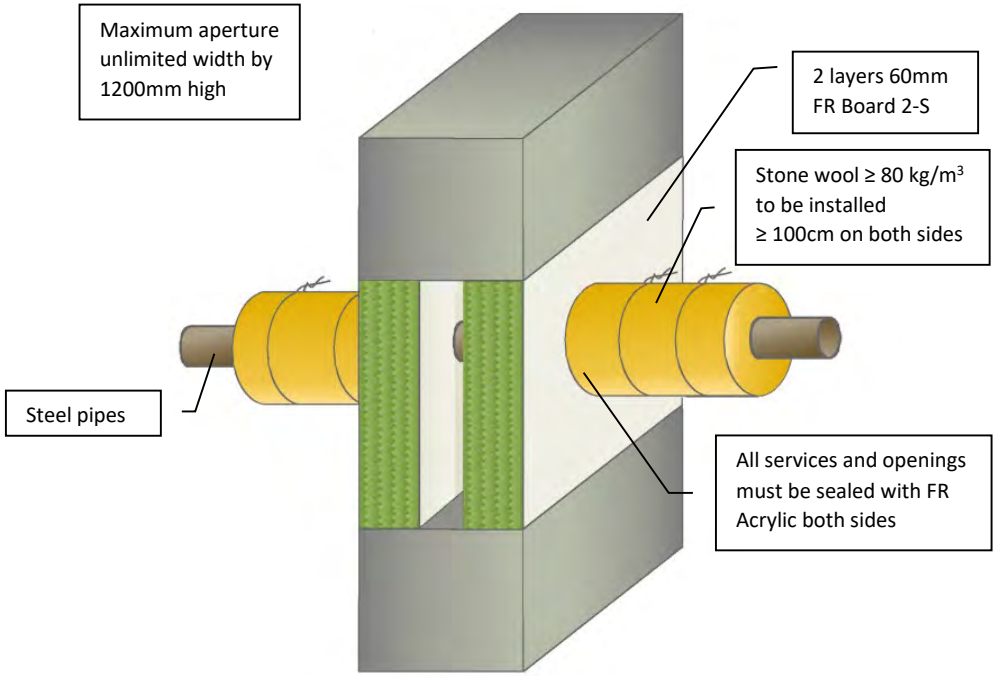

Minimum separations and limitations

An aperture can include several services, and they may also be different. The minimum permitted separation between adjacent seals/apertures is 200mm. Services should be a minimum of 25mm from seal edges. Services within the system Protecta® FR Board seal do not require a minimum separation, except pipes where pipe insulation penetrates the seal and plastic pipe penetrations which should be a minimum of 30 mm from other services in the aperture. The total amount of cross sections of services (including insulation) should not exceed 60% of the penetration area.

ETA 13/0673 & 18/0855

For all technical details on the products specified please refer to the technical data sheets that can be found on www.protecta.eu

Signed and approved:

Client:

Job Title:

Products	Protecta FR Board Protecta FR Acrylic
Application	Fire stopping of insulated steel pipes in rigid walls
Construction	Minimum wall thickness of 150 mm and comprise concrete, aerated concrete or masonry, with a density of ≥ 650 kg/m³

Fire & Sound classification

Steel pipes ≤ Ø40mm with ≥ 20mm stone wool insulation
EI 180 C/U & E 240 C/U

Steel pipes ≤ Ø219mm with ≥ 30mm stone wool insulation
EI 180 C/U & E 240 C/U

Sound reduction (seal only)
52 dB

Polyseam Ltd, 15 St Andrews Road, Huddersfield, West Yorkshire, HD1 6SB
Tel: +44 (0) 148 4421036
Email: post.uk@polyseam.com

Sheet size: **A4**	Drawn date & no: 20/4/15
Scale: **NTS**	Drawn by: K.B

Installation Instructions

1. Before installing Protecta® FR Board ensure that the surface of all service penetrations and surrounding construction is free from all loose contaminants, dust and grease.
2. Protecta® FR Coating and Protecta® FR Acrylic are water based, so in cases where corrosion protection is a problem, some metals may require a barrier between the seal and the surface prior to this installation.
3. The boards should be flush with the surface of the construction on both sides to maximize the fire resistance.
4. Cut the required board(s) to suit the aperture dimensions and type and size of service penetration(s). All exposed and cut edges of the board can be sealed with Protecta® FR Coating or Protecta® FR Acrylic prior to fitting which will act as an adhesive and ensure a smoke tight seal.
5. All joints, gaps or imperfections in the installed seal must be filled with Protecta® FR Acrylic on both sides.
6. Protecta® FR Board can be over-painted with most emulsion or alkyd (gloss) paints.

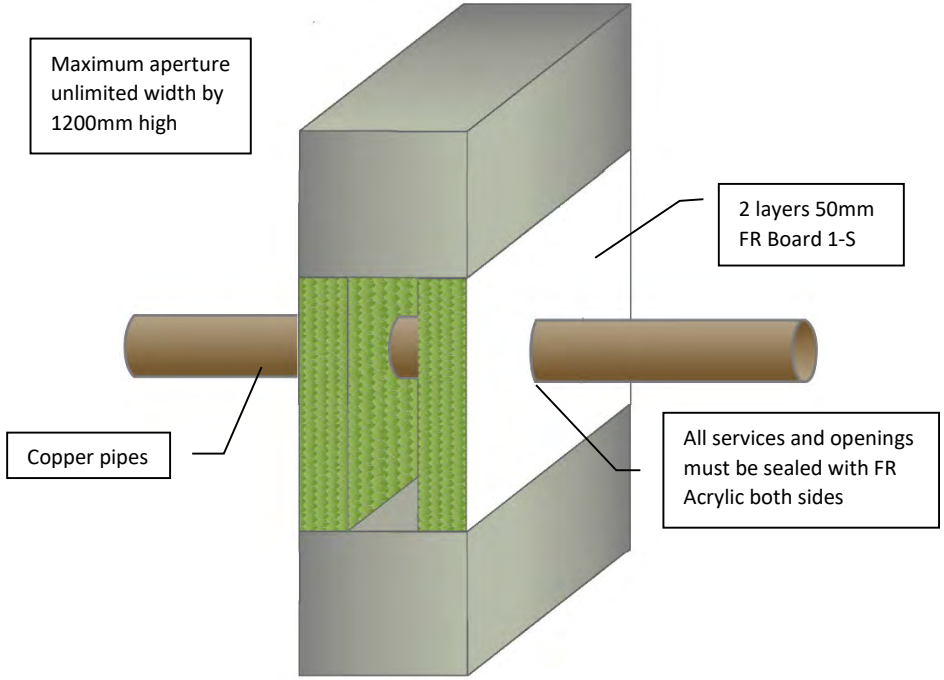

Minimum separations and limitations

An aperture can include several services, and they may also be different. The minimum permitted separation between adjacent seals/apertures is 200mm. Services should be a minimum of 25mm from seal edges. Services within the system Protecta® FR Board seal do not require a minimum separation, except pipes where pipe insulation penetrates the seal and plastic pipe penetrations which should be a minimum of 30 mm from other services in the aperture. The total amount of cross sections of services (including insulation) should not exceed 60% of the penetration area.

ETA 13/0673 & 18/0855

For all technical details on the products specified please refer to the technical data sheets that can be found on www.protecta.eu

Signed and approved:

Client:

Job Title:

Products	Protecta FR Board Protecta FR Acrylic
Application	Fire stopping of un-insulated copper pipes in rigid walls
Construction	Minimum wall thickness of 100 mm and comprise concrete, aerated concrete or masonry, with a density of ≥ 650 kg/m³

Fire & Sound classification

Copper pipes ≤ Ø6mm
EI 60 C/C & E 120 C/C

Sound reduction (seal only)
52 dB

Polyseam Ltd, 15 St Andrews Road, Huddersfield, West Yorkshire, HD1 6SB
Tel: +44 (0) 148 4421036
Email: post.uk@polyseam.com

Sheet size: **A4**	Drawn date & no: 26/7/17
Scale: **NTS**	Drawn by: K.B

Installation Instructions

1. Before installing Protecta® FR Board ensure that the surface of all service penetrations and surrounding construction is free from all loose contaminants, dust and grease.
2. The boards should be flush with the surface of the construction on both sides to maximize the fire resistance.
3. Cut the required board(s) to suit the aperture dimensions and type and size of service penetration(s). All exposed and cut edges of the board can be sealed with Protecta® FR Coating or Protecta® FR Acrylic prior to fitting which will act as an adhesive and ensure a smoke tight seal.
4. All joints, gaps or imperfections in the installed seal must be filled with Protecta® FR Acrylic on both sides.
5. Protecta® FR Board can be over-painted with most emulsion or alkyd (gloss) paints.

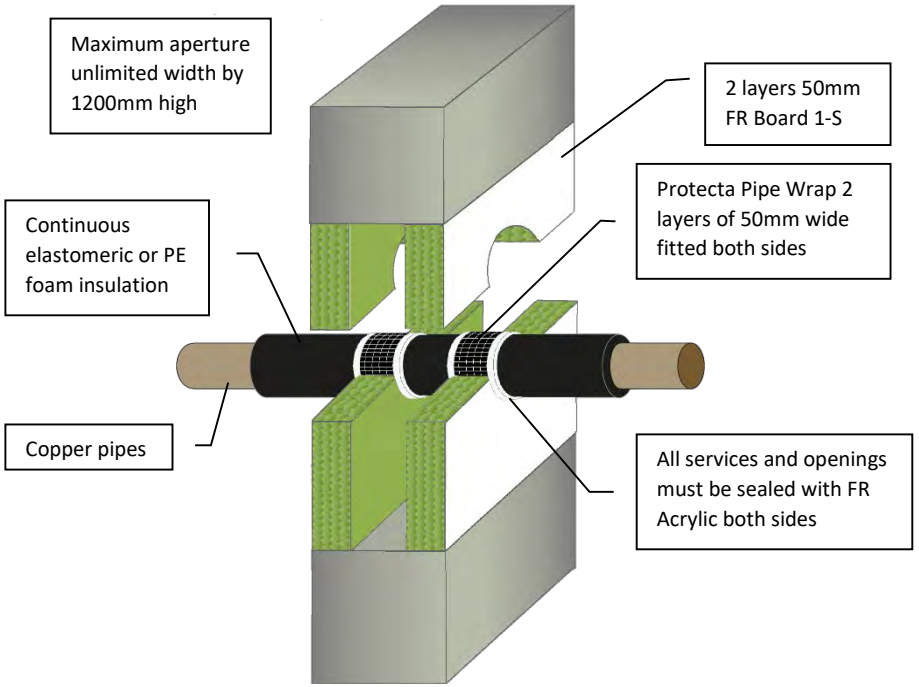

Minimum separations and limitations

An aperture can include several services, and they may also be different. The minimum permitted separation between adjacent seals/apertures is 200mm. Services should be a minimum of 25mm from seal edges. Services within the system Protecta® FR Board seal do not require a minimum separation, except pipes where pipe insulation penetrates the seal and plastic pipe penetrations which should be a minimum of 30 mm from other services in the aperture. The total amount of cross sections of services (including insulation) should not exceed 60% of the penetration area.

ETA 13/0673 & 18/0855

As a part of our policy of on-going product development and testing, we reserve the right to modify, alter or change product specifications without giving notice. All information contained in this document is given in good faith and is provided for guidance only. Any drawings provided are for illustrative purposes only. As Polyseam has no control over the methods or competence of installation and of prevailing site conditions, no warranties, expressed or implied, is intended to be given as to the actual performance of the product mentioned or referred to herein and no liability whatsoever will be accepted for any loss, damage or injury arising from the use of the information given.

For all technical details on the products specified please refer to the technical data sheets that can be found on www.protecta.eu

Signed and approved:

Client:

Job Title:

Products	Protecta FR Board Protecta FR Acrylic Protecta FR Pipe Wrap 25m
Application	Fire stopping of insulated copper pipes in rigid walls
Construction	Minimum wall thickness of 100 mm and comprise concrete, aerated concrete or masonry, with a density of ≥ 650 kg/m³

Fire & Sound classification

Copper pipes ≤ Ø12mm with 9mm continuous foam insulation EI 120 C/C & E 120 C/C

Copper pipes ≤ Ø54mm with 9 - 13mm continuous foam insulation EI 90 C/C & E 120 C/C

Copper pipes ≤ Ø54mm with 14 - 25mm continuous foam insulation EI 60 C/C & E 120 C/C

Sound reduction (seal only) 52 dB

Polyseam Ltd, 15 St Andrews Road, Huddersfield, West Yorkshire, HD1 6SB
Tel: +44 (0) 148 4421036
Email: post.uk@polyseam.com

Sheet size: **A4**	Drawn date & no: 5/3/19
Scale: **NTS**	Drawn by: K.B

Installation Instructions

1. Before installing Protecta® FR Board ensure that the surface of all service penetrations and surrounding construction is free from all loose contaminants, dust and grease.
2. Protecta® FR Coating and Protecta® FR Acrylic are water based, so in cases where corrosion protection is a problem, some metals may require a barrier between the seal and the surface prior to this installation.
3. The board can be positioned to either side of the construction or anywhere in between.
4. Cut the required board(s) to suit the aperture dimensions and type and size of service penetration(s). All exposed and cut edges of the board can be sealed with Protecta® FR Coating or Protecta® FR Acrylic prior to fitting which will act as an adhesive and ensure a smoke tight seal.
5. All joints, gaps or imperfections in the installed seal must be filled with Protecta® FR Acrylic on both sides.
6. Protecta® FR Board can be over-painted with most emulsion or alkyd (gloss) paints.

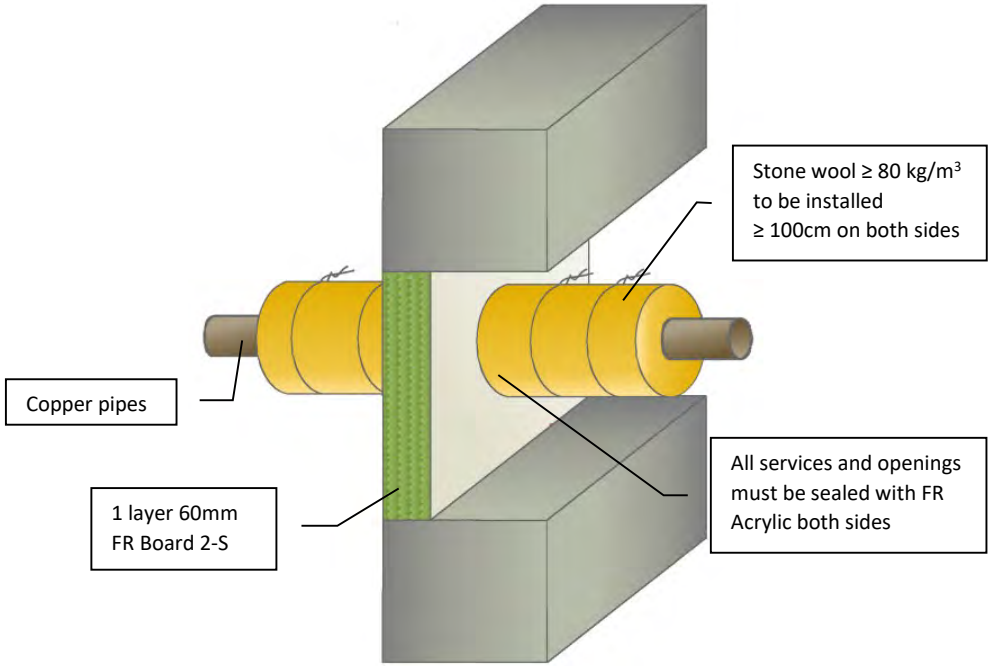

Minimum separations and limitations

An aperture can include several services, and they may also be different. The minimum permitted separation between adjacent seals/apertures is 200mm. Services should be a minimum of 25mm from seal edges. Services within the system Protecta® FR Board seal do not require a minimum separation, except pipes where pipe insulation penetrates the seal and plastic pipe penetrations which should be a minimum of 30 mm from other services in the aperture. The total amount of cross sections of services (including insulation) should not exceed 60% of the penetration area.

ETA 13/0673 & 18/0855

For all technical details on the products specified please refer to the technical data sheets that can be found on www.protecta.eu

Signed and approved:

Client:

Job Title:

Products	Protecta FR Board Protecta FR Acrylic
Application	Fire stopping of insulated copper pipes in rigid walls
Construction	Minimum wall thickness of 150 mm and comprise concrete, aerated concrete or masonry, with a density of ≥ 650 kg/m³

Fire & Sound classification

Copper pipes ≤ Ø12mm with ≥ 20mm stone wool insulation in maximum aperture 70mm wide and 70mm high EI 240 C/U & E 240 C/U

Copper pipes ≤ Ø54mm with ≥ 20mm stone wool insulation in maximum aperture 115mm wide and 115mm high EI 120 C/U & E 240 C/U

Copper pipes ≤ Ø54mm with ≥ 20mm stone wool insulation in maximum aperture unlimited width by 1200mm high EI 90 C/U & E 240 C/U

Sound reduction (seal only) 29 dB

Polyseam Ltd, 15 St Andrews Road, Huddersfield, West Yorkshire, HD1 6SB
Tel: +44 (0) 148 4421036
Email: post.uk@polyseam.com

Sheet size: **A4**	Drawn date & no: 20/4/15
Scale: **NTS**	Drawn by: K.B

Installation Instructions

1. Before installing Protecta® FR Board ensure that the surface of all service penetrations and surrounding construction is free from all loose contaminants, dust and grease.
2. Protecta® FR Coating and Protecta® FR Acrylic are water based, so in cases where corrosion protection is a problem, some metals may require a barrier between the seal and the surface prior to this installation.
3. The boards should be flush with the surface of the construction on both sides to maximize the fire resistance. If this is not possible, there should be an air gap of at least 30mm between the boards.
4. Cut the required board(s) to suit the aperture dimensions and type and size of service penetration(s). All exposed and cut edges of the board can be sealed with Protecta® FR Coating or Protecta® FR Acrylic prior to fitting which will act as an adhesive and ensure a smoke tight seal.
5. All joints, gaps or imperfections in the installed seal must be filled with Protecta® FR Acrylic on both sides.
6. Protecta® FR Board can be over-painted with most emulsion or alkyd (gloss) paints.

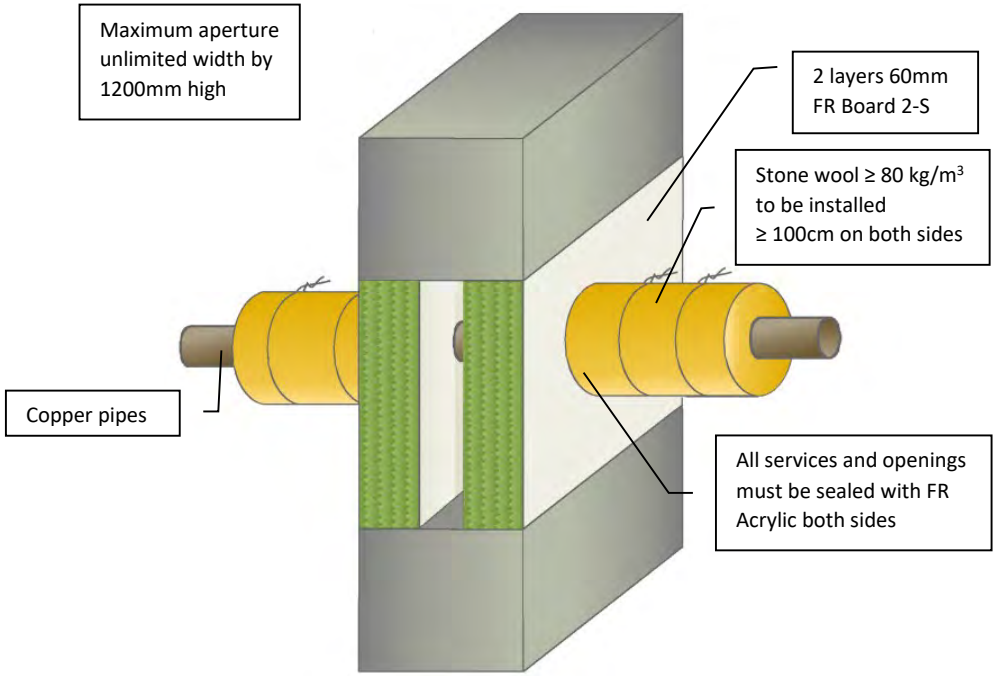

Minimum separations and limitations

An aperture can include several services, and they may also be different. The minimum permitted separation between adjacent seals/apertures is 200mm. Services should be a minimum of 25mm from seal edges. Services within the system Protecta® FR Board seal do not require a minimum separation, except pipes where pipe insulation penetrates the seal and plastic pipe penetrations which should be a minimum of 30 mm from other services in the aperture. The total amount of cross sections of services (including insulation) should not exceed 60% of the penetration area.

ETA 13/0673 & 18/0855

For all technical details on the products specified please refer to the technical data sheets that can be found on www.protecta.eu

Signed and approved:

Client:

Job Title:

Products	Protecta FR Board Protecta FR Acrylic
Application	Fire stopping of insulated copper pipes in rigid walls
Construction	Minimum wall thickness of 150 mm and comprise concrete, aerated concrete or masonry, with a density of ≥ 650 kg/m³

Fire & Sound classification

Copper pipes ≤ Ø54mm with ≥ 20mm stone wool insulation

EI 120 C/U & E 240 C/U

Sound reduction (seal only)

52 dB

Polyseam Ltd, 15 St Andrews Road, Huddersfield, West Yorkshire, HD1 6SB
Tel: +44 (0) 148 4421036
Email: post.uk@polyseam.com

Sheet size: **A4**	Drawn date & no: 20/4/15
Scale: **NTS**	Drawn by: K.B

Installation Instructions

1. Before installing Protecta® FR Board ensure that the surface of all service penetrations and surrounding construction is free from all loose contaminants, dust and grease.
2. Protecta® FR Coating and Protecta® FR Acrylic are water based, so in cases where corrosion protection is a problem, some metals may require a barrier between the seal and the surface prior to this installation.
3. The boards should be flush with the surface of the construction on both sides to maximize the fire resistance.
4. Cut the required board(s) to suit the aperture dimensions and type and size of service penetration(s). All exposed and cut edges of the board can be sealed with Protecta® FR Coating or Protecta® FR Acrylic prior to fitting which will act as an adhesive and ensure a smoke tight seal.
5. All joints, gaps or imperfections in the installed seal must be filled with Protecta® FR Acrylic on both sides.
6. Protecta® FR Board can be over-painted with most emulsion or alkyd (gloss) paints.

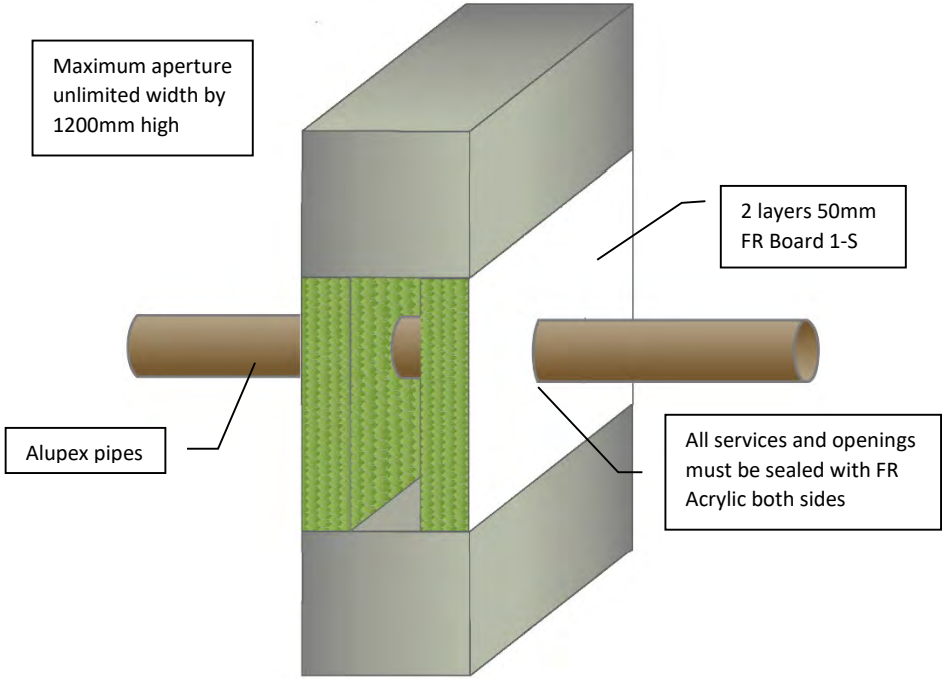

Minimum separations and limitations

An aperture can include several services, and they may also be different. The minimum permitted separation between adjacent seals/apertures is 200mm. Services should be a minimum of 25mm from seal edges. Services within the system Protecta® FR Board seal do not require a minimum separation, except pipes where pipe insulation penetrates the seal and plastic pipe penetrations which should be a minimum of 30 mm from other services in the aperture. The total amount of cross sections of services (including insulation) should not exceed 60% of the penetration area.

ETA 13/0673 & 18/0855

For all technical details on the products specified please refer to the technical data sheets that can be found on www.protecta.eu

Signed and approved:

Client:

Job Title:

Products	Protecta FR Board Protecta FR Acrylic
Application	Fire stopping of un-insulated alupex pipes in rigid walls
Construction	Minimum wall thickness of 100 mm and comprise concrete, aerated concrete or masonry, with a density of ≥ 650 kg/m³

Fire & Sound classification

Alupex pipes ≤ Ø20mm
EI 120 C/C & E 120 C/C

Sound reduction (seal only)
52 dB

Polyseam Ltd, 15 St Andrews Road, Huddersfield, West Yorkshire, HD1 6SB
Tel: +44 (0) 148 4421036
Email: post.uk@polyseam.com

Sheet size: **A4**	Drawn date & no: 26/7/17
Scale: **NTS**	Drawn by: K.B

Installation Instructions

1. Before installing Protecta® FR Board ensure that the surface of all service penetrations and surrounding construction is free from all loose contaminants, dust and grease.
2. The boards should be flush with the surface of the construction on both sides to maximize the fire resistance.
3. Cut the required board(s) to suit the aperture dimensions and type and size of service penetration(s). All exposed and cut edges of the board can be sealed with Protecta® FR Coating or Protecta® FR Acrylic prior to fitting which will act as an adhesive and ensure a smoke tight seal.
4. All joints, gaps or imperfections in the installed seal must be filled with Protecta® FR Acrylic on both sides.
5. Protecta® FR Board can be over-painted with most emulsion or alkyd (gloss) paints.

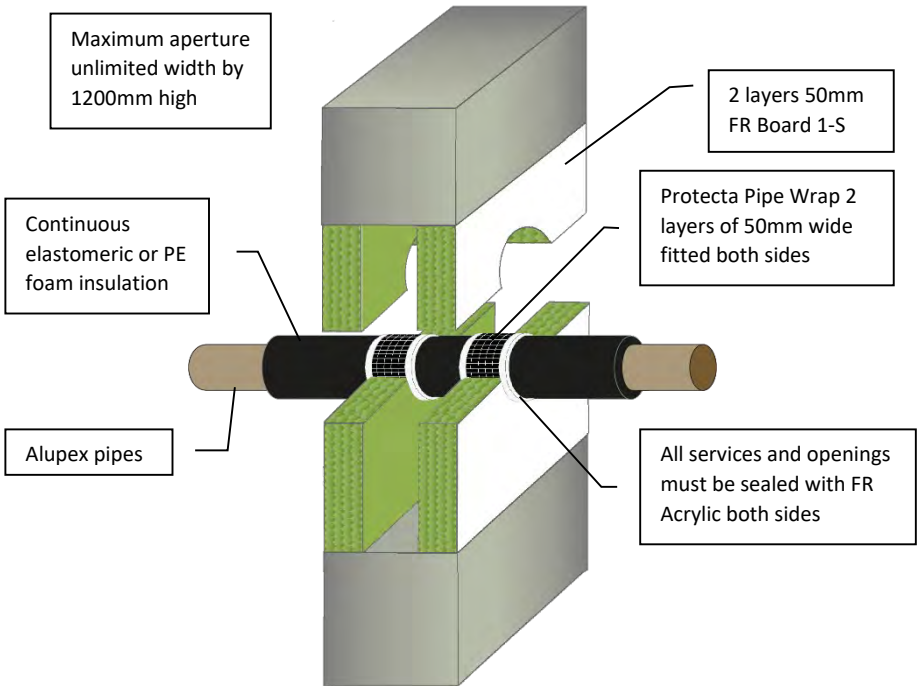

Minimum separations and limitations

An aperture can include several services, and they may also be different. The minimum permitted separation between adjacent seals/apertures is 200mm. Services should be a minimum of 25mm from seal edges. Services within the system Protecta® FR Board seal do not require a minimum separation, except pipes where pipe insulation penetrates the seal and plastic pipe penetrations which should be a minimum of 30 mm from other services in the aperture. The total amount of cross sections of services (including insulation) should not exceed 60% of the penetration area.

ETA 13/0673 & 18/0855

For all technical details on the products specified please refer to the technical data sheets that can be found on www.protecta.eu

Signed and approved:

Client:

Job Title:

Products	Protecta FR Board Protecta FR Acrylic Protecta FR Pipe Wrap 25m
Application	Fire stopping of insulated alupex pipes in rigid walls
Construction	Minimum wall thickness of 100 mm and comprise concrete, aerated concrete or masonry, with a density of ≥ 650 kg/m³

Fire & Sound classification

Alupex pipes ≤ Ø75mm with 9 - 25mm continuous foam insulation

EI 120 C/C & E 120 C/C

Sound reduction (seal only)

52 dB

Polyseam Ltd, 15 St Andrews Road, Huddersfield, West Yorkshire, HD1 6SB
Tel: +44 (0) 148 4421036
Email: post.uk@polyseam.com

Sheet size: **A4**	Drawn date & no: 5/3/19
Scale: **NTS**	Drawn by: K.B

Installation Instructions

1. Before installing Protecta® FR Board ensure that the surface of all service penetrations and surrounding construction is free from all loose contaminants, dust and grease.
2. Protecta® FR Coating and Protecta® FR Acrylic are water based, so in cases where corrosion protection is a problem, some metals may require a barrier between the seal and the surface prior to this installation.
3. The board can be positioned to either side of the construction or anywhere in between.
4. Cut the required board(s) to suit the aperture dimensions and type and size of service penetration(s). All exposed and cut edges of the board can be sealed with Protecta® FR Coating or Protecta® FR Acrylic prior to fitting which will act as an adhesive and ensure a smoke tight seal.
5. All joints, gaps or imperfections in the installed seal must be filled with Protecta® FR Acrylic on both sides.
6. Protecta® FR Board can be over-painted with most emulsion or alkyd (gloss) paints.

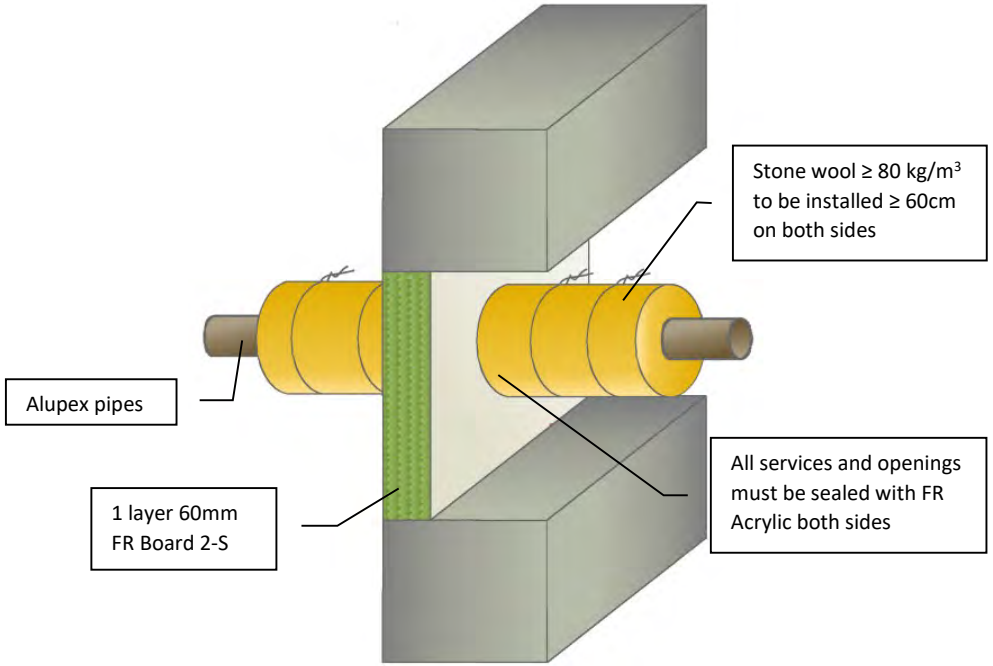

Minimum separations and limitations

An aperture can include several services, and they may also be different. The minimum permitted separation between adjacent seals/apertures is 200mm. Services should be a minimum of 25mm from seal edges. Services within the system Protecta® FR Board seal do not require a minimum separation, except pipes where pipe insulation penetrates the seal and plastic pipe penetrations which should be a minimum of 30 mm from other services in the aperture. The total amount of cross sections of services (including insulation) should not exceed 60% of the penetration area.

ETA 13/0673 & 18/0855

For all technical details on the products specified please refer to the technical data sheets that can be found on www.protecta.eu

Signed and approved:

Client:

Job Title:

Products	Protecta FR Board Protecta FR Acrylic
Application	Fire stopping of insulated alupex pipes in rigid walls
Construction	Minimum wall thickness of 150 mm and comprise concrete, aerated concrete or masonry, with a density of ≥ 650 kg/m³

Fire & Sound classification

Alupex pipes ≤ Ø75mm with ≥ 30mm stone wool insulation in maximum aperture 200mm wide and 200mm high EI 120 C/C & E 120 C/C

Alupex pipes ≤ Ø75mm with ≥ 30mm stone wool insulation in maximum aperture unlimited width by 1200mm high EI 90 C/C & E 120 C/C

Sound reduction (seal only) 29 dB

Polyseam Ltd, 15 St Andrews Road, Huddersfield, West Yorkshire, HD1 6SB
Tel: +44 (0) 148 4421036
Email: post.uk@polyseam.com

Sheet size: **A4**	Drawn date & no: 20/4/15
Scale: **NTS**	Drawn by: K.B

Installation Instructions

1. Before installing Protecta® FR Board ensure that the surface of all service penetrations and surrounding construction is free from all loose contaminants, dust and grease.
2. Protecta® FR Coating and Protecta® FR Acrylic are water based, so in cases where corrosion protection is a problem, some metals may require a barrier between the seal and the surface prior to this installation.
3. The boards should be flush with the surface of the construction on both sides to maximize the fire resistance. If this is not possible, there should be an air gap of at least 30mm between the boards.
4. Cut the required board(s) to suit the aperture dimensions and type and size of service penetration(s). All exposed and cut edges of the board can be sealed with Protecta® FR Coating or Protecta® FR Acrylic prior to fitting which will act as an adhesive and ensure a smoke tight seal.
5. All joints, gaps or imperfections in the installed seal must be filled with Protecta® FR Acrylic on both sides.
6. Protecta® FR Board can be over-painted with most emulsion or alkyd (gloss) paints.

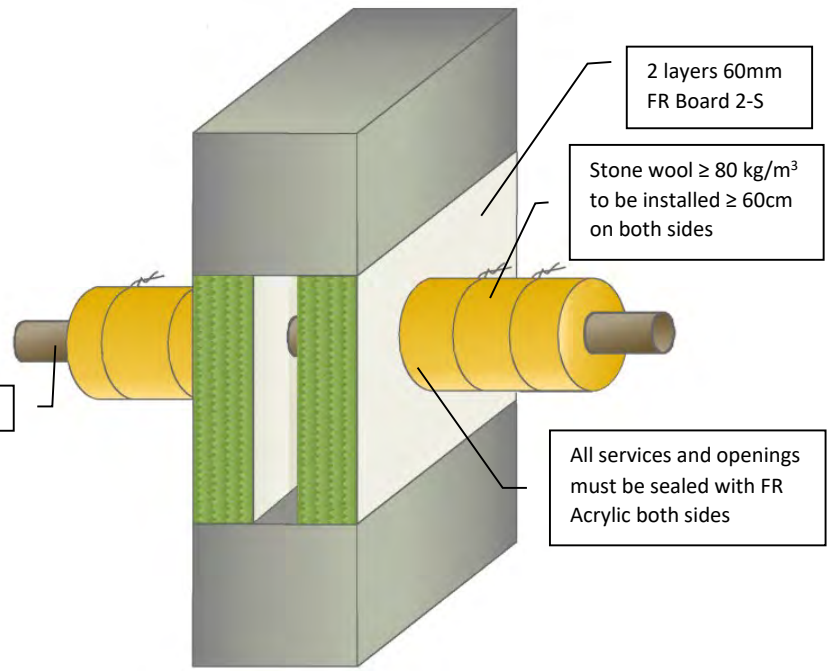

Minimum separations and limitations

An aperture can include several services, and they may also be different. The minimum permitted separation between adjacent seals/apertures is 200mm. Services should be a minimum of 25mm from seal edges. Services within the system Protecta® FR Board seal do not require a minimum separation, except pipes where pipe insulation penetrates the seal and plastic pipe penetrations which should be a minimum of 30 mm from other services in the aperture. The total amount of cross sections of services (including insulation) should not exceed 60% of the penetration area.

ETA 13/0673 & 18/0855

For all technical details on the products specified please refer to the technical data sheets that can be found on www.protecta.eu

Signed and approved:

Client:

Job Title:

Products	Protecta FR Board Protecta FR Acrylic
Application	Fire stopping of insulated alupex pipes in rigid walls
Construction	Minimum wall thickness of 150 mm and comprise concrete, aerated concrete or masonry, with a density of ≥ 650 kg/m³

Fire & Sound classification

Alupex pipes ≤ Ø16mm with ≥ 30mm stone wool insulation in maximum aperture 1200mm wide and 1200mm high EI 240 U/C & E 240 U/C

Alupex pipes ≤ Ø16mm with ≥ 30mm stone wool insulation in maximum aperture unlimited width by 1200mm high EI 180 U/C & E 240 U/C

Alupex pipes ≤ Ø75mm with ≥ 30mm stone wool insulation in maximum aperture unlimited width by 1200mm high EI 120 C/C & E 120 C/C

Sound reduction (seal only) 52 dB

Polyseam Ltd, 15 St Andrews Road, Huddersfield, West Yorkshire, HD1 6SB
Tel: +44 (0) 148 4421036
Email: post.uk@polyseam.com

Sheet size: **A4**	Drawn date & no: 20/4/15
Scale: **NTS**	Drawn by: K.B

Installation Instructions

1. Before installing Protecta® FR Board ensure that the surface of all service penetrations and surrounding construction is free from all loose contaminants, dust and grease.
2. The boards should be flush with the surface of the construction on both sides to maximize the fire resistance.
3. Cut the required board(s) to suit the aperture dimensions and type and size of service penetration(s). All exposed and cut edges of the board can be sealed with Protecta® FR Coating or Protecta® FR Acrylic prior to fitting which will act as an adhesive and ensure a smoke tight seal.
4. All joints, gaps or imperfections in the installed seal must be filled with Protecta® FR Acrylic on both sides.
5. Protecta® FR Board can be over-painted with most emulsion or alkyd (gloss) paints.

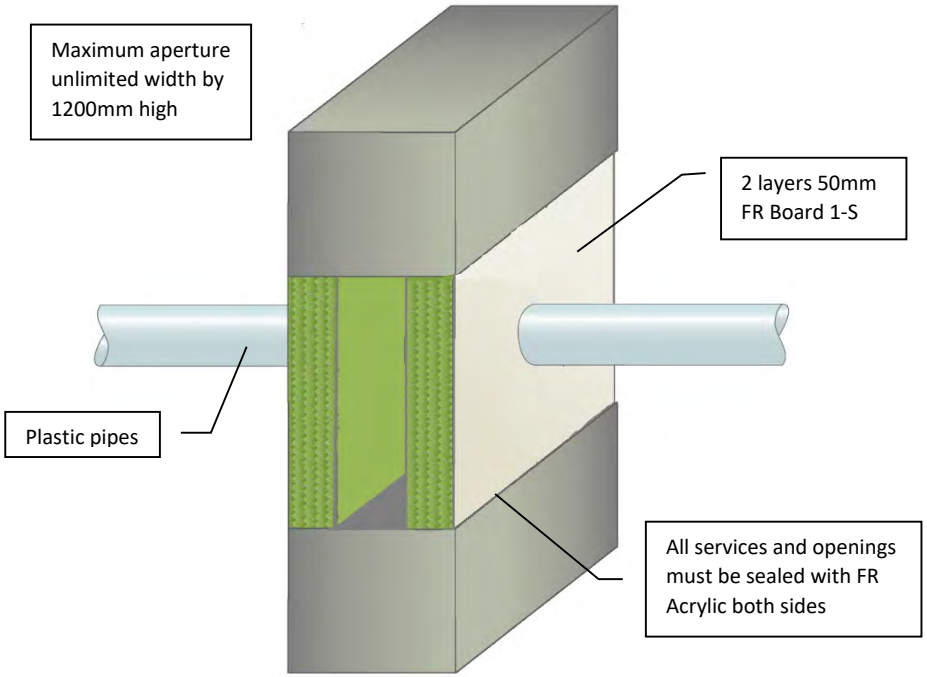

Minimum separations and limitations

An aperture can include several services, and they may also be different. The minimum permitted separation between adjacent seals/apertures is 200mm. Services should be a minimum of 25mm from seal edges. Services within the system Protecta® FR Board seal do not require a minimum separation, except pipes where pipe insulation penetrates the seal and plastic pipe penetrations which should be a minimum of 30 mm from other services in the aperture. The total amount of cross sections of services (including insulation) should not exceed 60% of the penetration area.

ETA 13/0673 & 18/0855

For all technical details on the products specified please refer to the technical data sheets that can be found on www.protecta.eu

Signed and approved:

Client:

Job Title:

Products	Protecta FR Board Protecta FR Acrylic
Application	Fire stopping of plastic pipes in rigid walls
Construction	Minimum wall thickness of 100 mm and comprise concrete, aerated concrete or masonry, with a density of ≥ 650 kg/m³

Fire & Sound classification

PEX pipe-in-pipe ≤ Ø25mm EI 90 C/C & E 90 C/C

PVC-U and PVC-C pipes ≤ Ø32mm with wall thickness 1.0-2.4mm EI 60 U/C & E 90 U/C

PE, ABS and SAN+PVC pipes ≤ Ø32mm with wall thickness 2.0-3.0mm EI 60 U/C & E 60 U/C

PP pipes ≤ Ø32mm with wall thickness 1.8-2.2mm EI 60 U/C & E 120 U/C

Sound reduction (seal only) 52 dB

Polyseam Ltd, 15 St Andrews Road, Huddersfield, West Yorkshire, HD1 6SB
Tel: +44 (0) 148 4421036
Email: post.uk@polyseam.com

Sheet size: **A4**	Drawn date & no: 5/3/19
Scale: **NTS**	Drawn by: K.B

Installation Instructions

1. Before installing Protecta® FR Board ensure that the surface of all service penetrations and surrounding construction is free from all loose contaminants, dust and grease.
2. The boards should be flush with the surface of the construction on both sides to maximize the fire resistance.
3. Cut the required board(s) to suit the aperture dimensions and type and size of service penetration(s). All exposed and cut edges of the board can be sealed with Protecta® FR Coating or Protecta® FR Acrylic prior to fitting which will act as an adhesive and ensure a smoke tight seal.
4. All joints, gaps or imperfections in the installed seal must be filled with Protecta® FR Acrylic on both sides.
5. Protecta® FR Board can be over-painted with most emulsion or alkyd (gloss) paints.

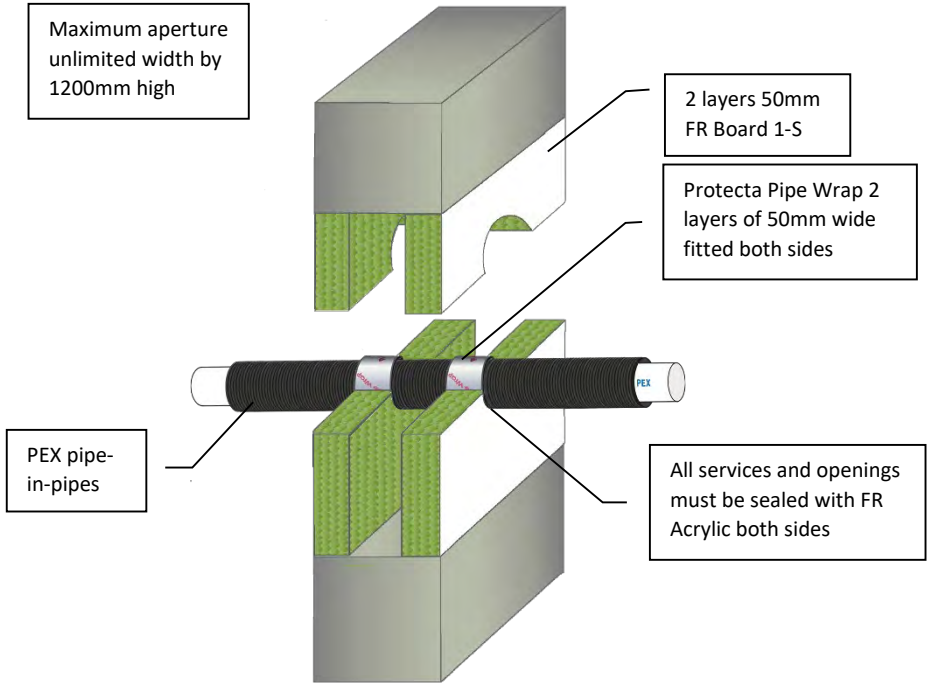

Minimum separations and limitations

An aperture can include several services, and they may also be different. The minimum permitted separation between adjacent seals/apertures is 200mm. Services should be a minimum of 25mm from seal edges. Services within the system Protecta® FR Board seal do not require a minimum separation, except pipes where pipe insulation penetrates the seal and plastic pipe penetrations which should be a minimum of 30 mm from other services in the aperture. The total amount of cross sections of services (including insulation) should not exceed 60% of the penetration area.

ETA 13/0673 & 18/0855

For all technical details on the products specified please refer to the technical data sheets that can be found on www.protecta.eu

Signed and approved:

Client:

Job Title:

Products	Protecta FR Board Protecta FR Acrylic Protecta FR Pipe Wrap
Application	Fire stopping of PEX pipe-in-pipes in rigid walls
Construction	Minimum wall thickness of 100 mm and comprise concrete, aerated concrete or masonry, with a density of ≥ 650 kg/m³

Fire & Sound classification

PEX pipe-in-pipes ≤ Ø54mm
EI 120 C/C & E 120 C/C

PEX pipe-in-pipes ≤ Ø25mm in bundles ≤ Ø50mm
EI 90 C/C & E 90 C/C

Sound reduction (seal only)
52 dB

Polyseam Ltd, 15 St Andrews Road, Huddersfield, West Yorkshire, HD1 6SB
Tel: +44 (0) 148 4421036
Email: post.uk@polyseam.com

Sheet size: **A4**	Drawn date & no: 5/3/19
Scale: **NTS**	Drawn by: K.B

Installation Instructions

1. Before installing Protecta® FR Board ensure that the surface of all service penetrations and surrounding construction is free from all loose contaminants, dust and grease.
2. The boards should be flush with the surface of the construction on both sides to maximize the fire resistance.
3. Cut the required board(s) to suit the aperture dimensions and type and size of service penetration(s). All exposed and cut edges of the board can be sealed with Protecta® FR Coating or Protecta® FR Acrylic prior to fitting which will act as an adhesive and ensure a smoke tight seal.
4. All joints, gaps or imperfections in the installed seal must be filled with Protecta® FR Acrylic on both sides.
5. Protecta® FR Board can be over-painted with most emulsion or alkyd (gloss) paints.

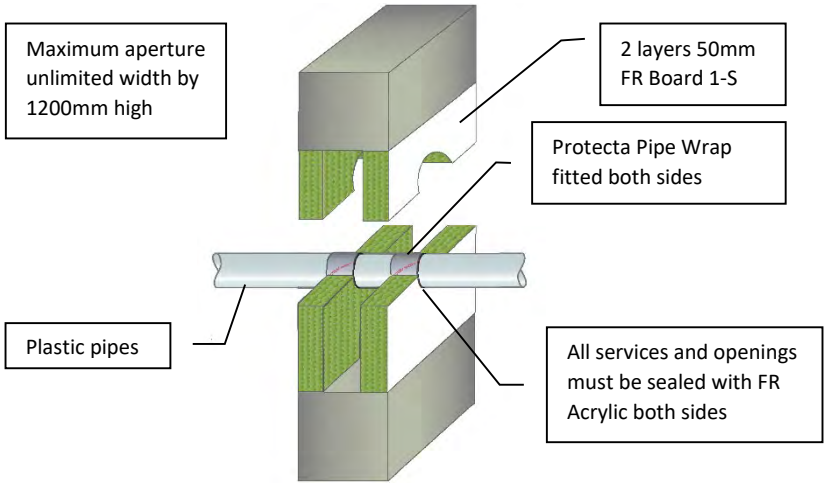

Services	Pipe Wall Thickness	FR Pipe Wrap	Classification
≤ Ø 40mm PVC-U & PVC-C	1.9 – 3.0mm	50 x 1.8mm (1 layer)	EI 120 U/U (E 120 U/U)
≤ Ø 40mm PE, ABS & SAN+PVC	2.4 – 3.7mm	50 x 1.8mm (1 layer)	EI 120 U/U (E 120 U/U)
≤ Ø 40mm PP	1.8 – 5.5mm	50 x 1.8mm (1 layer)	EI 120 U/U (E 120 U/U)
≤ Ø 110mm PVC-U & PVC-C	2.7 – 6.6mm	50 x 3.6mm (2 layers)	EI 90 U/C (E 120 U/C)
≤ Ø 110mm PE, ABS & SAN+PVC	4.2 – 10.0mm	50 x 3.6mm (2 layers)	EI 90 U/C (E 120 U/C)
≤ Ø 110mm PP	2.7 – 15.1mm	50 x 3.6mm (2 layers)	EI 90 U/U (E 90 U/U)
≤ Ø 125mm PVC-U & PVC-C	3.7 – 7.4mm	50 x 5.4mm (3 layers)	EI 90 U/C (E 120 U/C)
≤ Ø 125mm PE, ABS & SAN+PVC	4.8 – 12.0mm	50 x 5.4mm (3 layers)	EI 90 U/C (E 120 U/C)
≤ Ø 125mm PP	3.1 – 17.1mm	50 x 5.4mm (3 layers)	EI 90 U/C (E 120 U/C)
≤ Ø 160mm PVC-U & PVC-C	9.5mm	50 x 7.2mm (4 layers)	EI 90 U/C (E 120 U/C)
≤ Ø 160mm PE, ABS & SAN+PVC	14.6mm	50 x 7.2mm (4 layers)	EI 90 U/C (E 120 U/C)
≤ Ø 160mm PP	21.9mm	50 x 7.2mm (4 layers)	EI 90 U/C (E 120 U/C)
≤ Ø 200mm PVC-U & PVC-C	9.0 – 10.2mm	50 x 18.0mm (10 layers)	EI 90 C/C (E 90 C/C)
≤ Ø 250mm PVC-U & PVC-C	8.5 – 11.0mm	50 x 18.0mm (10 layers)	EI 90 C/C (E 90 C/C)
≤ Ø 315mm PVC-U & PVC-C	7.7 – 12.1mm	50 x 18.0mm (10 layers)	EI 90 C/C (E 90 C/C)
≤ Ø 400mm PVC-U & PVC-C	9.8 – 15.3mm	50 x 28.8mm (16 layers)	EI 90 C/C (E 90 C/C)

Minimum separations and limitations An aperture can include several services, and they may also be different. The minimum permitted separation between adjacent seals/apertures is 200mm. Services should be a minimum of 25mm from seal edges. Services within the system Protecta® FR Board seal do not require a minimum separation, except pipes where pipe insulation penetrates the seal and plastic pipe penetrations which should be a minimum of 30 mm from other services in the aperture. The total amount of cross sections of services should not exceed 60% of the penetration area.

ETA 13/0673 & 18/0855

For all technical details on the products specified please refer to the technical data sheets that can be found on www.protecta.eu

Signed and approved:

Client:

Job Title:

Products Protecta FR Board
Protecta FR Acrylic
Protecta FR Pipe Wrap 25m

Application Fire stopping of plastic pipes in rigid walls

Construction Minimum wall thickness of 100 mm and comprise concrete, aerated concrete or masonry, with a density of ≥ 650 kg/m³

Fire & Sound classification

For fire classifications please see the table on the left.

Sound reduction (seal only) 52 dB

Polyseam Ltd, 15 St Andrews Road, Huddersfield, West Yorkshire, HD1 6SB
Tel: +44 (0) 148 4421036
Email: post.uk@polyseam.com

Sheet size:	Drawn date & no:
A4	5/3/19
Scale:	Drawn by:
NTS	K.B

Installation Instructions

1. Before installing Protecta® FR Board ensure that the surface of all service penetrations and surrounding construction is free from all loose contaminants, dust and grease.
2. The boards should be flush with the surface of the construction on both sides to maximize the fire resistance. If this is not possible, there should be an air gap of at least 30mm between the boards.
3. Cut the required board(s) to suit the aperture dimensions and type and size of service penetration(s). All exposed and cut edges of the board can be sealed with Protecta® FR Coating or Protecta® FR Acrylic prior to fitting which will act as an adhesive and ensure a smoke tight seal.
4. All joints, gaps or imperfections in the installed seal must be filled with Protecta® FR Acrylic on both sides.
5. Protecta® FR Board can be over-painted with most emulsion or alkyd (gloss) paints.

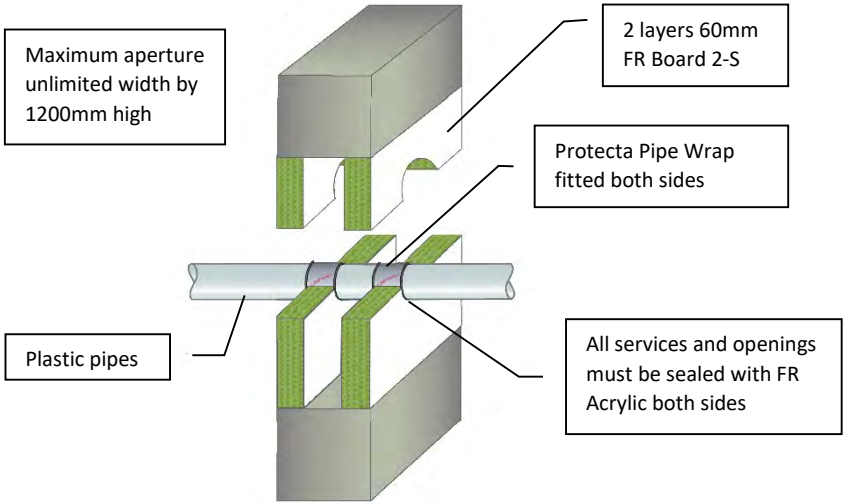

Services	Pipe Wall Thickness	FR Pipe Wrap	Classification
≤ Ø 40mm PVC-U & PVC-C	1.9 – 3.0mm	50 x 1.8mm (1 layer)	EI 240 U/C (E 240 U/C)
≤ Ø 40mm PE, ABS & SAN+PVC	2.4 – 4.6mm	50 x 1.8mm (1 layer)	EI 240 U/C (E 240 U/C)
≤ Ø 40mm PP	1.8 – 5.5mm	50 x 1.8mm (1 layer)	EI 240 U/C (E 240 U/C)
≤ Ø 110mm PVC-U & PVC-C	2.7 – 6.6mm	50 x 3.6mm (2 layers)	EI 240 U/C (E 240 U/C)
≤ Ø 110mm PE, ABS & SAN+PVC	3.4 – 10.0mm	50 x 3.6mm (2 layers)	EI 240 U/C (E 240 U/C)
≤ Ø 110mm PP	2.7 – 10.0mm	50 x 3.6mm (2 layers)	EI 240 C/C (E 240 C/C)
≤ Ø 125mm PVC-U & PVC-C	4.7 – 7.4mm	50 x 7.2mm (4 layers)	EI 240 U/C (E 240 U/C)
≤ Ø 125mm PE, ABS & SAN+PVC	3.9 – 7.4mm	50 x 7.2mm (4 layers)	EI 240 U/C (E 240 U/C)
≤ Ø 125mm PP	3.1 – 11.4mm	50 x 7.2mm (4 layers)	EI 240 C/C (E 240 C/C)
≤ Ø 160mm PVC-U & PVC-C	4.0 – 9.5mm	50 x 10.8mm (6 layers)	EI 240 U/C (E 240 U/C)
≤ Ø 160mm PE, ABS & SAN+PVC	4.9 – 9.5mm	50 x 10.8mm (6 layers)	EI 240 U/C (E 240 U/C)
≤ Ø 160mm PP	4.9 – 14.6mm	50 x 10.8mm (6 layers)	EI 240 C/C (E 240 C/C)
≤ Ø 200mm PVC-U & PVC-C	5.0 – 10.2mm	75 x 18.0mm (10 layers)	EI 120 C/C (E 120 C/C)
≤ Ø 250mm PVC-U & PVC-C	6.0 – 11.0mm	75 x 18.0mm (10 layers)	EI 120 C/C (E 120 C/C)
≤ Ø 315mm PVC-U & PVC-C	7.7 – 12.1mm	75 x 18.0mm (10 layers)	EI 120 C/C (E 120 C/C)
≤ Ø 400mm PVC-U & PVC-C	9.8 – 15.3mm	75 x 28.8mm (16 layers)	EI 120 C/C (E 120 C/C)

Minimum separations and limitations An aperture can include several services, and they may also be different. The minimum permitted separation between adjacent seals/apertures is 200mm. Services should be a minimum of 25mm from seal edges. Services within the system Protecta® FR Board seal do not require a minimum separation, except pipes where pipe insulation penetrates the seal and plastic pipe penetrations which should be a minimum of 30 mm from other services in the aperture. The total amount of cross sections of services should not exceed 60% of the penetration area.

ETA 13/0673 & 18/0855

For all technical details on the products specified please refer to the technical data sheets that can be found on www.protecta.eu

Signed and approved:

Client:

Job Title:

Products Protecta FR Board
Protecta FR Acrylic
Protecta FR Pipe Wrap 25m

Application Fire stopping of plastic pipes in rigid walls

Construction Minimum wall thickness of 150 mm and comprise concrete, aerated concrete or masonry, with a density of ≥ 650 kg/m³

Fire & Sound classification

For fire classifications please see the table on the left.

Sound reduction (seal only) 52 dB

Polyseam Ltd, 15 St Andrews Road, Huddersfield, West Yorkshire, HD1 6SB
Tel: +44 (0) 148 4421036
Email: post.uk@polyseam.com

Sheet size:	Drawn date & no:
A4	6/3/19
Scale:	Drawn by:
NTS	K.B

Installation Instructions

1. Before installing Protecta® FR Board ensure that the surface of all service penetrations and surrounding construction is free from all loose contaminants, dust and grease.
2. The boards should be flush with the surface of the construction on both sides to maximize the fire resistance.
3. Cut the required board(s) to suit the aperture dimensions and type and size of service penetration(s). All exposed and cut edges of the board can be sealed with Protecta® FR Coating or Protecta® FR Acrylic prior to fitting which will act as an adhesive and ensure a smoke tight seal.
4. All joints, gaps or imperfections in the installed seal must be filled with Protecta® FR Acrylic on both sides.
5. Protecta® FR Board can be over-painted with most emulsion or alkyd (gloss) paints.

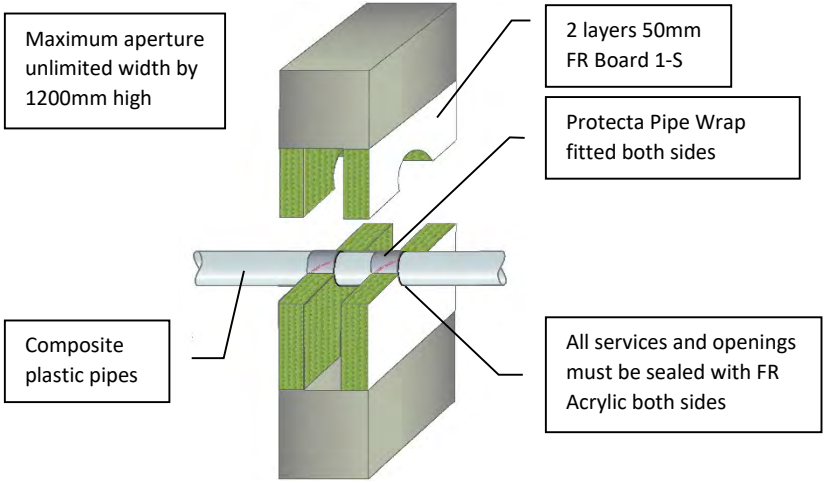

Services	FR Pipe Wrap	Classification
Ø 32mm Aquatherm Green SDR9 pipes	50 x 1.8mm (1 layer)	EI 90 C/C (E 120 C/C)
≤ Ø 110mm Aquatherm Green SDR9 pipes	50 x 3.6mm (2 layers)	EI 90 C/C (E 120 C/C)
≤ Ø 50mm BluePower pipes	50 x 3.6mm (2 layers)	EI 90 U/U (E 90 U/U)
≤ Ø 110mm BluePower pipes	50 x 3.6mm (2 layers)	EI 90 C/U (E 90 C/U)
≤ Ø 50mm Geberit Silent-PP pipes	50 x 3.6mm (2 layers)	EI 120 U/U (E 120 U/U)
≤ Ø 110mm Geberit Silent-PP pipes	50 x 3.6mm (2 layers)	EI 120 U/C (E 120 U/C)
≤ Ø 50mm Polo-Kal NG pipes	50 x 3.6mm (2 layers)	EI 120 U/U (E 120 U/U)
≤ Ø 110mm Polo-Kal NG pipes	50 x 3.6mm (2 layers)	EI 120 U/C (E 120 U/C)
Ø 125mm Polo-Kal NG pipes	50 x 7.2mm (4 layers)	EI 120 U/C (E 120 U/C)
Ø 160mm Polo-Kal NG pipes	50 x 10.8mm (6 layers)	EI 120 U/C (E 120 U/C)
≤ Ø 50mm Rehau Raupiano Plus pipes	50 x 3.6mm (2 layers)	EI 120 U/U (E 120 U/U)
≤ Ø 110mm Rehau Raupiano Plus pipes	50 x 3.6mm (2 layers)	EI 120 U/C (E 120 U/C)
Ø 125mm Rehau Raupiano Plus pipes	50 x 7.2mm (4 layers)	EI 120 U/C (E 120 U/C)
Ø 160mm Rehau Raupiano Plus pipes	50 x 10.8mm (6 layers)	EI 120 U/C (E 120 U/C)
≤ Ø 50mm Wavin SiTech pipes	50 x 3.6mm (2 layers)	EI 90 U/U (E 120 U/U)
≤ Ø 110mm Wavin SiTech pipes	50 x 3.6mm (2 layers)	EI 60 U/C (E 120 U/C)

Minimum separations and limitations An aperture can include several services, and they may also be different. The minimum permitted separation between adjacent seals/apertures is 200mm. Services should be a minimum of 25mm from seal edges. Services within the system Protecta® FR Board seal do not require a minimum separation, except pipes where pipe insulation penetrates the seal and plastic pipe penetrations which should be a minimum of 30 mm from other services in the aperture. The total amount of cross sections of services should not exceed 60% of the penetration area.

ETA 13/0673 & 18/0855

For all technical details on the products specified please refer to the technical data sheets that can be found on www.protecta.eu

Signed and approved:

Client:

Job Title:

Products Protecta FR Board
Protecta FR Acrylic
Protecta FR Pipe Wrap 25m

Application Fire stopping of composite plastic pipes in rigid walls

Construction Minimum wall thickness of 100 mm and comprise concrete, aerated concrete or masonry, with a density of ≥ 650 kg/m³

Fire & Sound classification

For fire classifications please see the table on the left.

Sound reduction (seal only) 52 dB

Polyseam Ltd, 15 St Andrews Road, Huddersfield, West Yorkshire, HD1 6SB
Tel: +44 (0) 148 4421036
Email: post.uk@polyseam.com

Sheet size:	Drawn date & no:
A4	5/3/19
Scale:	Drawn by:
NTS	K.B

Installation Instructions

1. Before installing Protecta® FR Board ensure that the surface of all service penetrations and surrounding construction is free from all loose contaminants, dust and grease.
2. The boards should be flush with the surface of the construction on both sides to maximize the fire resistance.
3. Cut the required board(s) to suit the aperture dimensions and type and size of service penetration(s). All exposed and cut edges of the board can be sealed with Protecta® FR Coating or Protecta® FR Acrylic prior to fitting which will act as an adhesive and ensure a smoke tight seal.
4. All joints, gaps or imperfections in the installed seal must be filled with Protecta® FR Acrylic on both sides.
5. Protecta® FR Board can be over-painted with most emulsion or alkyd (gloss) paints.

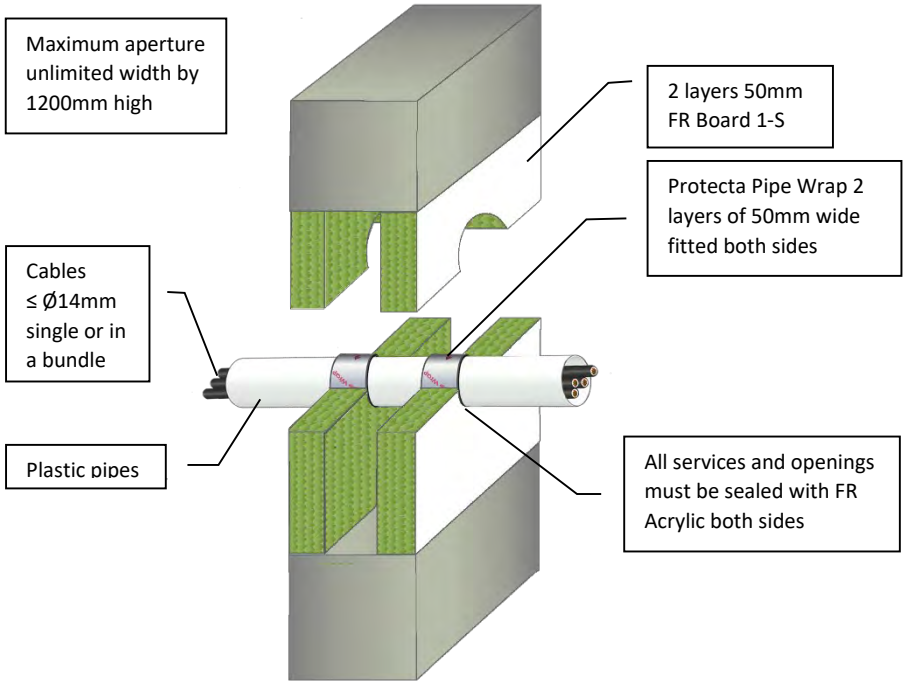

Minimum separations and limitations

An aperture can include several services, and they may also be different. The minimum permitted separation between adjacent seals/apertures is 200mm. Services should be a minimum of 25mm from seal edges. Services within the system Protecta® FR Board seal do not require a minimum separation, except pipes where pipe insulation penetrates the seal and plastic pipe penetrations which should be a minimum of 30 mm from other services in the aperture. The total amount of cross sections of services (including insulation) should not exceed 60% of the penetration area.

ETA 13/0673 & 18/0855

Client:

Job Title:

Products	Protecta FR Board Protecta FR Acrylic Protecta FR Pipe Wrap
Application	Fire stopping of conduits in rigid walls
Construction	Minimum wall thickness of 100 mm and comprise concrete, aerated concrete or masonry, with a density of ≥ 650 kg/m³

Fire & Sound classification

Conduits of PVC-U & PVC-C pipes ≤ Ø110mm with wall thickness 2.7-6.6mm
EI 90 U/C & E 120 U/C

Conduits of PE, ABS & SAN+PVC pipes ≤ Ø110mm with wall thickness 4.2-10.0mm
EI 90 U/C & E 120 U/C

Conduits of PP pipes ≤ Ø110mm with wall thickness 2.7-15.1mm EI 90 U/C & E 120 U/C

Sound reduction (seal only) 52 dB

Polyseam Ltd, 15 St Andrews Road, Huddersfield, West Yorkshire, HD1 6SB
Tel: +44 (0) 148 4421036
Email: post.uk@polyseam.com

For all technical details on the products specified please refer to the technical data sheets that can be found on www.protecta.eu

Signed and approved:

Sheet size: **A4**	Drawn date & no: 5/3/19
Scale: **NTS**	Drawn by: K.B

Installation Instructions

1. Before installing Protecta® FR Board ensure that the surface of all service penetrations and surrounding construction is free from all loose contaminants, dust and grease.
2. Protecta® FR Coating and Protecta® FR Acrylic are water based, so in cases where corrosion protection is a problem, some metals may require a barrier between the seal and the surface prior to this installation.
3. The boards should be flush with the surface of the construction on both sides to maximize the fire resistance.
4. Cut the required board(s) to suit the aperture dimensions and type and size of service penetration(s). All exposed and cut edges of the board can be sealed with Protecta® FR Coating or Protecta® FR Acrylic prior to fitting which will act as an adhesive and ensure a smoke tight seal.
5. All joints, gaps or imperfections in the installed seal must be filled with Protecta® FR Acrylic on both sides.
6. Insulate the ventilation duct towards the fire seal on both sides with 30mm thick stone wool matting to the length given on this page. Insulate on one side only if the duct terminates in the wall.
7. Protecta® FR Board can be over-painted with most emulsion or alkyd (gloss) paints.

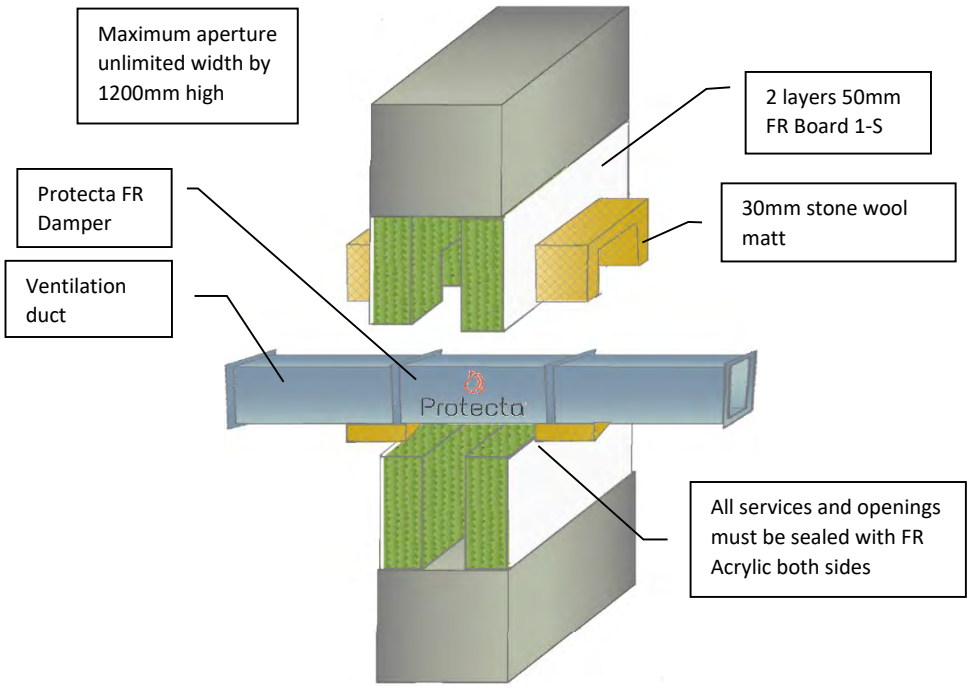

Minimum separations and limitations

An aperture can include several services, and they may also be different. The minimum permitted separation between adjacent seals/apertures is 200mm. Services should be a minimum of 25mm from seal edges. Services within the system Protecta® FR Board seal do not require a minimum separation, except pipes where pipe insulation penetrates the seal and plastic pipe penetrations which should be a minimum of 30 mm from other services in the aperture. The total amount of cross sections of services (including insulation) should not exceed 60% of the penetration area.

This product is certified to applicable European (EN) standards and UL-EU Mark service requirements.

For all technical details on the products specified please refer to the technical data sheets that can be found on www.protecta.eu

Signed and approved:

Client:

Job Title:

Products	Protecta FR Board Protecta FR Acrylic Protecta FR Damper
Application	Fire stopping of ventilation ducts in rigid walls
Construction	Minimum wall thickness of 100 mm and comprise concrete, aerated concrete or masonry, with a density of ≥ 650 kg/m³

Fire & Sound classification

≤ Ø 400mm damper/duct with ≥ 200mm stone wool matt on both sides
EI 120 & E 120

≤ Ø 1250mm damper/duct with ≥ 500mm stone wool matt on both sides
EI 60 & E 90

≤ 600mm high x 1000mm wide damper/duct with ≥ 500mm stone wool matt on both sides
EI 120 & E 120

≤ 1200mm high x 1700mm wide damper/duct with ≥ 500mm stone wool matt on both sides
EI 90 & E 90

Sound reduction (seal only) 52 dB

Protecta®

Polyseam Ltd, 15 St Andrews Road, Huddersfield, West Yorkshire, HD1 6SB
Tel: +44 (0) 148 4421036
Email: post.uk@polyseam.com

Sheet size: **A4**	Drawn date & no: 27/7/17
Scale: **NTS**	Drawn by: K.B

Installation Instructions

1. Ensure the faces of the aperture opening are free of dust and any other contaminants. The faces may be moistened for better adhesion.
2. The seal can be positioned to either side of the construction or anywhere in between.
3. When installing Protecta® EX Mortar in hollow floor slabs or boards, level the fire seal with the soffit side. Ensure there is sufficient thickness of concrete below the void for the depth of mortar. Where this is not the case, tubular voids should be filled with stone wool normally the same thickness as the depth of the floor slab. Alternatively, simply fire seal on both sides.
4. Install a stone wool shutter board to achieve the required thickness of mortar. Make sure that this achieves a very tight seal – any small openings should be sealed with Protecta® FR Acrylic
5. Pour clean water into a suitable mixing vessel and add the mortar to obtain the required consistency. Mix steadily at low speed and ensure that any lumps of powder are fully dispersed. Always add the mortar to the water, do not reverse this mixing process
6. Once the desired consistency is achieved pour or trowel the mortar onto the shutter board making sure that it flows into all corners and around services. Apply a firm pressure to the mortar to eliminate any trapped air bubbles. Build up to the required depth.

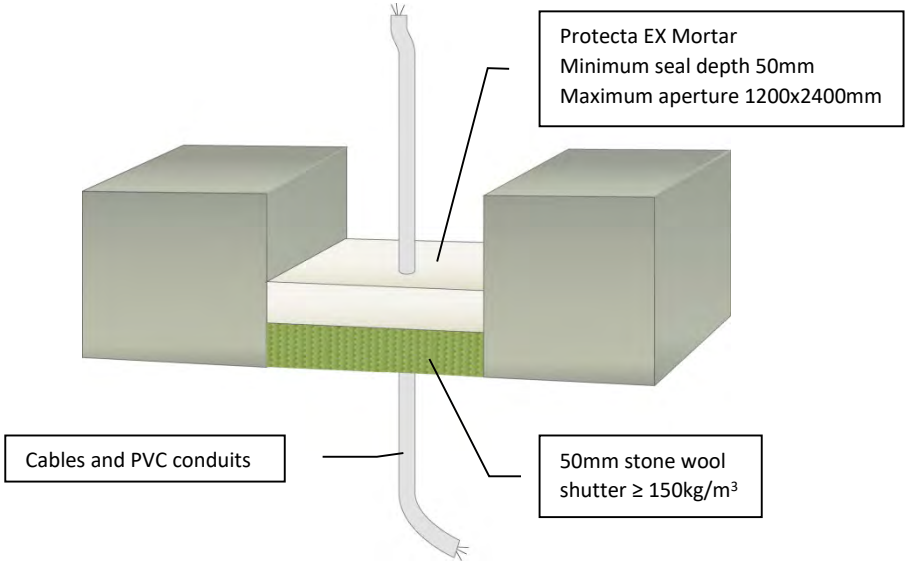

Minimum separations and limitations
An aperture can include several services, and they may also be different. The minimum permitted separation between adjacent seals/apertures is 200mm. Services should be a minimum of 30mm from seal edges. Services within the seal do not require a minimum separation, except pipes where combustible pipe insulation penetrates the seal and plastic pipe penetrations which should be a minimum of 30mm from other services in the aperture. The total amount of cross sections of services (including insulation) should not exceed 60% of the penetration area.

ETA 13/0672 & 18/0855

Client:

Job Title:

Products	Protecta EX Mortar Stone wool shutter
Application	Fire stopping of cables and conduits in rigid floors
Construction	Minimum floor thickness of 150 mm and comprise aerated concrete or concrete with a minimum density of 650kg/m³.

Fire & Sound classification

Cables ≤ Ø21mm	EI 90 & E 180
Cables ≤ Ø21mm in tied bundles ≤ Ø100mm and PVC conduits (C/U) ≤ Ø16mm	EI 180 & E 180
Non-sheathed cables/wires ≤ Ø17mm	EI 60 & E 180
Sound reduction (seal only)	48dB

Polyseam Ltd, 15 St Andrews Road, Huddersfield, West Yorkshire, HD1 6SB
Tel: +44 (0) 148 4421036
Email: post.uk@polyseam.com

For all technical details on the products specified please refer to the technical data sheets that can be found on www.protecta.eu

Signed and approved:

Sheet size: **A4**	Drawn date & no: 6/3/19
Scale: **NTS**	Drawn by: K.B

Installation Instructions

1. Ensure the faces of the aperture opening are free of dust and any other contaminants. The faces may be moistened for better adhesion.
2. The seal can be positioned to either side of the construction or anywhere in between.
3. When installing Protecta® EX Mortar in hollow floor slabs or boards, level the fire seal with the soffit side. Ensure there is sufficient thickness of concrete below the void for the depth of mortar. Where this is not the case, tubular voids should be filled with stone wool normally the same thickness as the depth of the floor slab. Alternatively, simply fire seal on both sides.
4. Install a shutter board to achieve the required thickness of mortar. Make sure that this achieves a very tight seal.
5. Pour clean water into a suitable mixing vessel and add the mortar to obtain the required consistency. Mix steadily at low speed and ensure that any lumps of powder are fully dispersed. Always add the mortar to the water, do not reverse this mixing process
6. Once the desired consistency is achieved pour or trowel the mortar onto the shutter board making sure that it flows into all corners and around services. Apply a firm pressure to the mortar to eliminate any trapped air bubbles. Build up to the required depth.

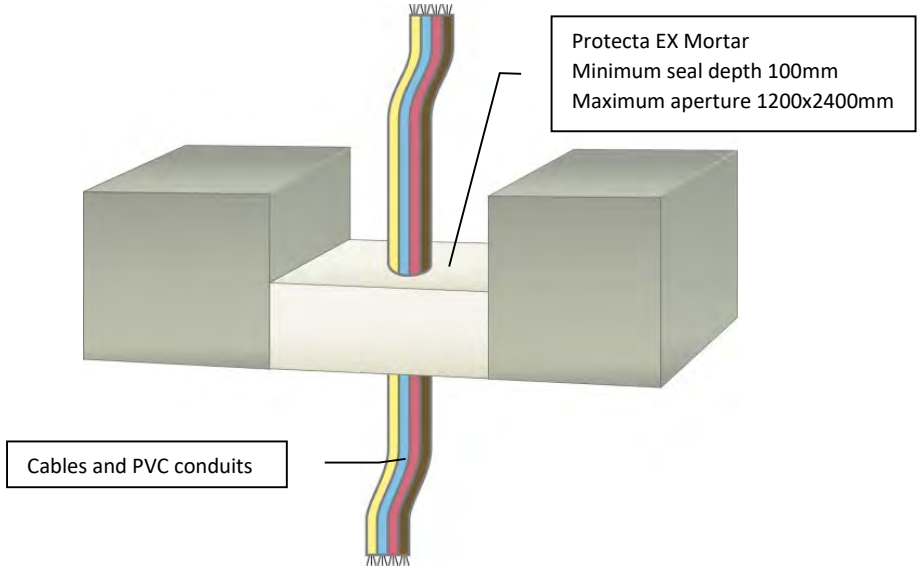

Loadbearing Properties

Soft body impact, serviceability 500Nm. Soft body impact, safety in use 700Nm. Hard body impact serviceability 6Nm. Hard body impact, safety in use 10Nm. Concentrated load to 15kN on size up to 1500mm x1000mm (no failure), 4.85kN on sizes up to 1200mm x 2400mm.

Minimum separations and limitations

An aperture can include several services, and they may also be different. The minimum permitted separation between adjacent seals/apertures is 200mm. Services should be a minimum of 30mm from seal edges. Services within the seal do not require a minimum separation, except pipes where combustible pipe insulation penetrates the seal and plastic pipe penetrations which should be a minimum of 30mm from other services in the aperture. The total amount of cross sections of services (including insulation) should not exceed 60% of the penetration area.

ETA 13/0672 & 18/0855

For all technical details on the products specified please refer to the technical data sheets that can be found on www.protecta.eu

Signed and approved:

Client:

Job Title:

Products	Protecta EX Mortar
Application	Fire stopping of cables and conduits in rigid floors
Construction	Minimum floor thickness of 150 mm and comprise aerated concrete or concrete with a minimum density of 650kg/m³

Fire & Sound classification

Cables ≤ Ø21mm	EI 90 & E 180
Cables ≤ Ø21mm in tied bundles ≤ Ø100mm and PVC conduits (C/U) ≤ Ø16mm	EI 180 & E 180
Cables ≤ Ø50mm, single or bundled	EI 60 & E 180
Cables ≤ Ø80mm, single or bundled	EI 60 & E 120
Non-sheathed cables/wires ≤ Ø17mm	EI 60 & E 180
Sound reduction (seal only)	48dB

Polyseam Ltd, 15 St Andrews Road, Huddersfield, West Yorkshire, HD1 6SB
Tel: +44 (0) 148 4421036
Email: post.uk@polyseam.com

Sheet size: **A4**	Drawn date & no: 6/3/19
Scale: **NTS**	Drawn by: K.B

Installation Instructions

1. Ensure the faces of the aperture opening are free of dust and any other contaminants. The faces may be moistened for better adhesion.
2. The seal can be positioned to either side of the construction or anywhere in between.
3. When installing Protecta® EX Mortar in hollow floor slabs or boards, level the fire seal with the soffit side. Ensure there is sufficient thickness of concrete below the void for the depth of mortar. Where this is not the case, tubular voids should be filled with stone wool normally the same thickness as the depth of the floor slab. Alternatively, simply fire seal on both sides.
4. Install a shutter board to achieve the required thickness of mortar. Make sure that this achieves a very tight seal.
5. Pour clean water into a suitable mixing vessel and add the mortar to obtain the required consistency. Mix steadily at low speed and ensure that any lumps of powder are fully dispersed. Always add the mortar to the water, do not reverse this mixing process
6. Once the desired consistency is achieved pour or trowel the mortar onto the shutter board making sure that it flows into all corners and around services. Apply a firm pressure to the mortar to eliminate any trapped air bubbles. Build up to the required depth.

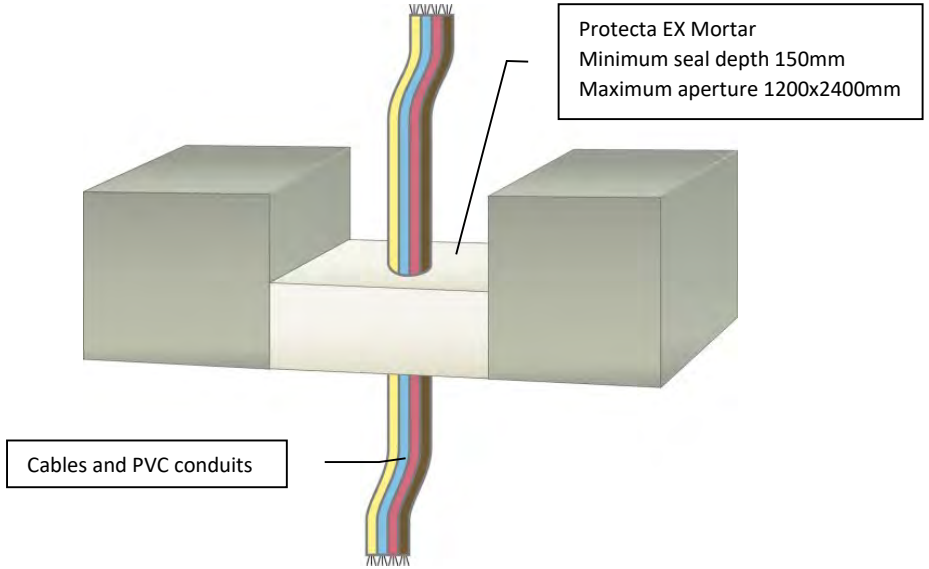

Loadbearing Properties

Soft body impact, serviceability 500Nm. Soft body impact, safety in use 700Nm. Hard body impact serviceability 6Nm. Hard body impact, safety in use 10Nm. Concentrated load to 15kN on size up to 1500mm x1000mm (no failure), 4.85kN on sizes up to 1200mm x 2400mm.

Minimum separations and limitations

An aperture can include several services, and they may also be different. The minimum permitted separation between adjacent seals/apertures is 200mm. Services should be a minimum of 30mm from seal edges. Services within the seal do not require a minimum separation, except pipes where combustible pipe insulation penetrates the seal and plastic pipe penetrations which should be a minimum of 30mm from other services in the aperture. The total amount of cross sections of services (including insulation) should not exceed 60% of the penetration area.

ETA 13/0672 & 18/0855

For all technical details on the products specified please refer to the technical data sheets that can be found on www.protecta.eu

Signed and approved:

Client:

Job Title:

Products	Protecta EX Mortar
Application	Fire stopping of cables and conduits in rigid floors
Construction	Minimum floor thickness of 150 mm and comprise aerated concrete or concrete with a minimum density of 650kg/m³

Fire & Sound classification

Cables ≤ Ø21mm, single	EI 120 & E 240
Cables ≤ Ø21mm in tied bundles ≤ Ø100mm and PVC conduits (C/U) ≤ Ø16mm	EI 180 & E 180
Cables ≤ Ø50mm, single or bundled	EI 90 & E 240
Cables ≤ Ø80mm, single or bundled	EI 60 & E 120
Unsheathed wires/cables ≤ Ø24 mm	EI 120 & E 120
Sound reduction (seal only)	48dB

Polyseam Ltd, 15 St Andrews Road, Huddersfield, West Yorkshire, HD1 6SB
Tel: +44 (0) 148 4421036
Email: post.uk@polyseam.com

Sheet size: **A4**	Drawn date & no: 6/3/19
Scale: **NTS**	Drawn by: K.B

Installation Instructions

1. Ensure the faces of the aperture opening are free of dust and any other contaminants. The faces may be moistened for better adhesion.
2. Bare metal passing through the seal must be protected against corrosion using a suitable primer/protection system.
3. The seal can be positioned to either side of the construction or anywhere in between.
4. When installing Protecta® EX Mortar in hollow floor slabs or boards, level the fire seal with the soffit side. Ensure there is sufficient thickness of concrete below the void for the depth of mortar. Where this is not the case, tubular voids should be filled with stone wool normally the same thickness as the depth of the floor slab. Alternatively, simply fire seal on both sides.
5. Install a stone wool shutter board to achieve the required thickness of mortar. Make sure that this achieves a very tight seal – any small openings should be sealed with Protecta® FR Acrylic
6. Pour clean water into a suitable mixing vessel and add the mortar to obtain the required consistency. Mix steadily at low speed and ensure that any lumps of powder are fully dispersed. Always add the mortar to the water, do not reverse this mixing process
7. Once the desired consistency is achieved pour or trowel the mortar onto the shutter board making sure that it flows into all corners and around services. Apply a firm pressure to the mortar to eliminate any trapped air bubbles. Build up to the required depth.

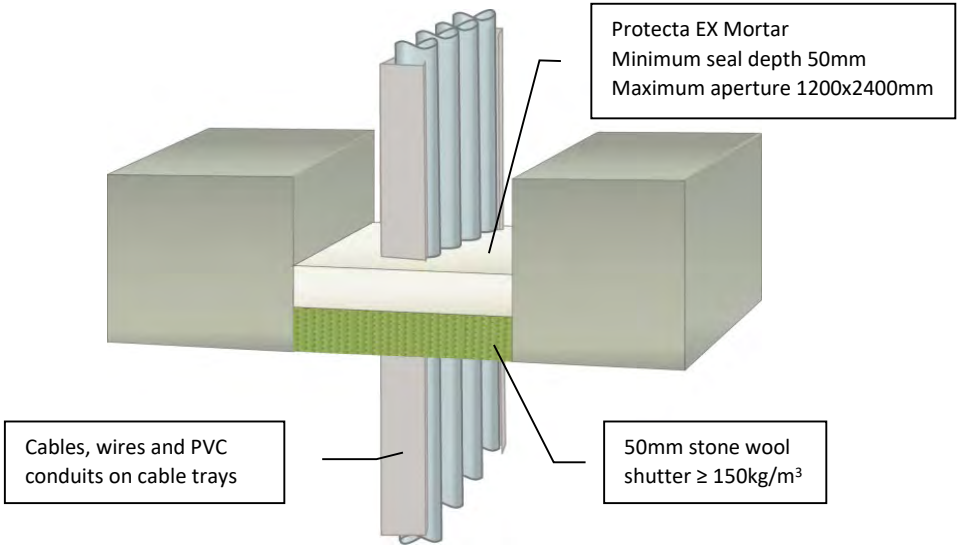

Minimum separations and limitations
An aperture can include several services, and they may also be different. The minimum permitted separation between adjacent seals/apertures is 200mm. Services should be a minimum of 30mm from seal edges. Services within the seal do not require a minimum separation, except pipes where combustible pipe insulation penetrates the seal and plastic pipe penetrations which should be a minimum of 30mm from other services in the aperture. The total amount of cross sections of services (including insulation) should not exceed 60% of the penetration area.

ETA 13/0672 & 18/0855

For all technical details on the products specified please refer to the technical data sheets that can be found on www.protecta.eu

Signed and approved:

Client:

Job Title:

Products	Protecta EX Mortar Stone wool shutter
Application	Fire stopping of cables, wires and conduits on cable trays in rigid floors
Construction	Minimum floor thickness of 150 mm and comprise aerated concrete or concrete with a minimum density of 650kg/m³.

Fire & Sound classification

Cables ≤ Ø21mm, single or bundled on trays
EI 60 & E 180

Cables ≤ Ø21mm, single or bundled, non-sheathed cables/wires ≤ Ø17mm and PVC conduits (C/U) ≤ Ø16mm on trays or ladders
EI 60 & E 90

Sound reduction (seal only)
48dB

Polyseam Ltd, 15 St Andrews Road, Huddersfield, West Yorkshire, HD1 6SB
Tel: +44 (0) 148 4421036
Email: post.uk@polyseam.com

Sheet size: **A4**	Drawn date & no: 6/3/19
Scale: **NTS**	Drawn by: K.B

Installation Instructions

1. Ensure the faces of the aperture opening are free of dust and any other contaminants. The faces may be moistened for better adhesion.
2. Bare metal passing through the seal must be protected against corrosion using a suitable primer/protection system.
3. The seal can be positioned to either side of the construction or anywhere in between.
4. When installing Protecta® EX Mortar in hollow floor slabs or boards, level the fire seal with the soffit side. Ensure there is sufficient thickness of concrete below the void for the depth of mortar. Where this is not the case, tubular voids should be filled with stone wool normally the same thickness as the depth of the floor slab. Alternatively, simply fire seal on both sides.
5. Install a shutter board to achieve the required thickness of mortar. Make sure that this achieves a very tight seal.
6. Pour clean water into a suitable mixing vessel and add the mortar to obtain the required consistency. Mix steadily at low speed and ensure that any lumps of powder are fully dispersed. Always add the mortar to the water, do not reverse this mixing process
7. Once the desired consistency is achieved pour or trowel the mortar onto the shutter board making sure that it flows into all corners and around services. Apply a firm pressure to the mortar to eliminate any trapped air bubbles. Build up to the required depth.

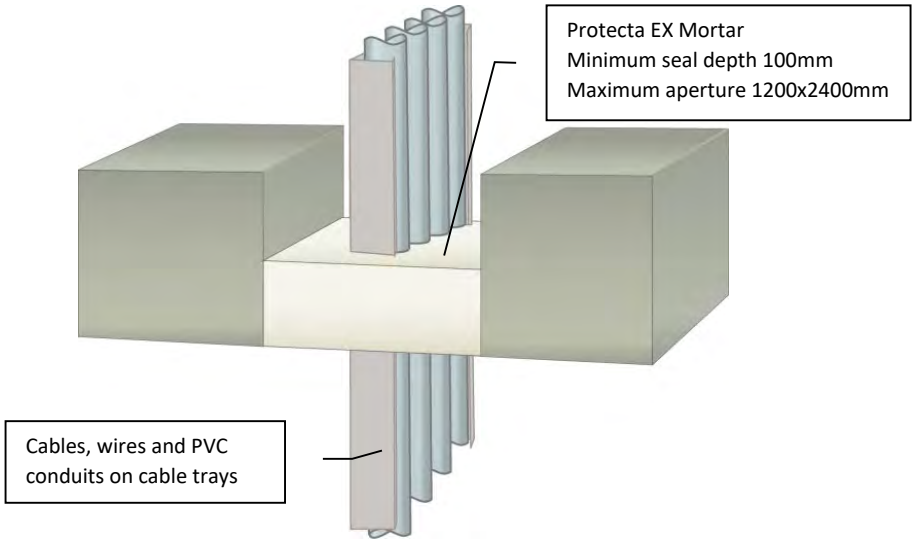

Loadbearing Properties

Soft body impact, serviceability 500Nm. Soft body impact, safety in use 700Nm. Hard body impact serviceability 6Nm. Hard body impact, safety in use 10Nm. Concentrated load to 15kN on size up to 1500mm x1000mm (no failure), 4.85kN on sizes up to 1200mm x 2400mm.

Minimum separations and limitations

An aperture can include several services, and they may also be different. The minimum permitted separation between adjacent seals/apertures is 200mm. Services should be a minimum of 30mm from seal edges. Services within the seal do not require a minimum separation, except pipes where combustible pipe insulation penetrates the seal and plastic pipe penetrations which should be a minimum of 30mm from other services in the aperture. The total amount of cross sections of services (including insulation) should not exceed 60% of the penetration area.

ETA 13/0672 & 18/0855

For all technical details on the products specified please refer to the technical data sheets that can be found on www.protecta.eu

Signed and approved:

Client:

Job Title:

Products	Protecta EX Mortar
Application	Fire stopping of cables, wires and conduits on cable trays in rigid floors
Construction	Minimum floor thickness of 150 mm and comprise aerated concrete or concrete with a minimum density of 650kg/m^3

Fire & Sound classification

Cables ≤ Ø50mm, single or bundled, non-sheathed cables/wires ≤ Ø17mm and PVC conduits ≤ Ø16mm (C/U) on trays
EI 60 & E 180

Cables ≤ Ø80mm, single or bundled, non-sheathed cables/wires ≤ Ø17mm and PVC conduits ≤ Ø16mm (C/U) on trays or ladders
EI 60 & E 120

Sound reduction (seal only)
48dB

Polyseam Ltd, 15 St Andrews Road, Huddersfield, West Yorkshire, HD1 6SB
Tel: +44 (0) 148 4421036
Email: post.uk@polyseam.com

Sheet size: **A4**	Drawn date & no: 6/3/19
Scale: **NTS**	Drawn by: K.B

Installation Instructions

1. Ensure the faces of the aperture opening are free of dust and any other contaminants. The faces may be moistened for better adhesion.
2. Bare metal passing through the seal must be protected against corrosion using a suitable primer/protection system.
3. The seal can be positioned to either side of the construction or anywhere in between.
4. When installing Protecta® EX Mortar in hollow floor slabs or boards, level the fire seal with the soffit side. Ensure there is sufficient thickness of concrete below the void for the depth of mortar. Where this is not the case, tubular voids should be filled with stone wool normally the same thickness as the depth of the floor slab. Alternatively, simply fire seal on both sides.
5. Install a shutter board to achieve the required thickness of mortar. Make sure that this achieves a very tight seal.
6. Pour clean water into a suitable mixing vessel and add the mortar to obtain the required consistency. Mix steadily at low speed and ensure that any lumps of powder are fully dispersed. Always add the mortar to the water, do not reverse this mixing process
7. Once the desired consistency is achieved pour or trowel the mortar onto the shutter board making sure that it flows into all corners and around services. Apply a firm pressure to the mortar to eliminate any trapped air bubbles. Build up to the required depth.

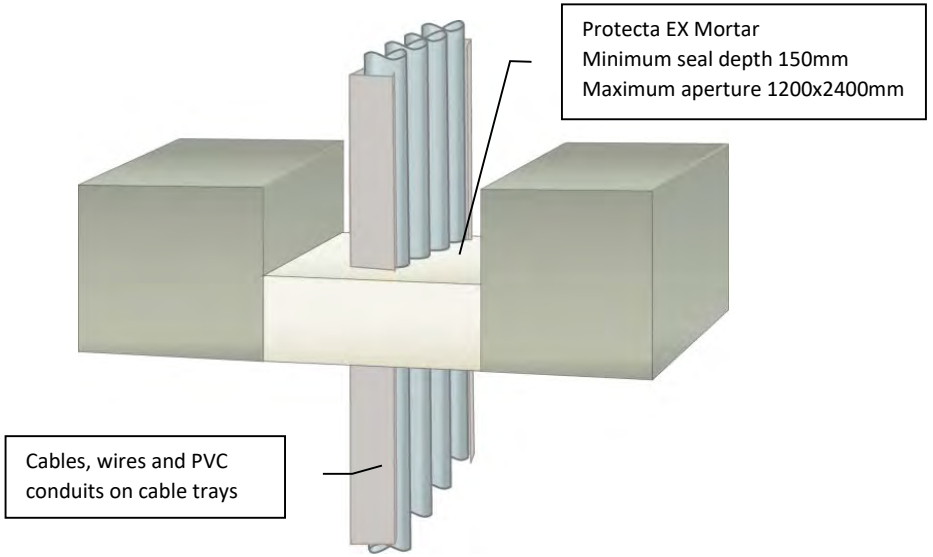

Loadbearing Properties

Soft body impact, serviceability 500Nm. Soft body impact, safety in use 700Nm. Hard body impact serviceability 6Nm. Hard body impact, safety in use 10Nm. Concentrated load to 15kN on size up to 1500mm x1000mm (no failure), 4.85kN on sizes up to 1200mm x 2400mm.

Minimum separations and limitations

An aperture can include several services, and they may also be different. The minimum permitted separation between adjacent seals/apertures is 200mm. Services should be a minimum of 30mm from seal edges. Services within the seal do not require a minimum separation, except pipes where combustible pipe insulation penetrates the seal and plastic pipe penetrations which should be a minimum of 30mm from other services in the aperture. The total amount of cross sections of services (including insulation) should not exceed 60% of the penetration area.

ETA 13/0672 & 18/0855

For all technical details on the products specified please refer to the technical data sheets that can be found on www.protecta.eu

Signed and approved:

Client:

Job Title:

Products	Protecta EX Mortar
Application	Fire stopping of cables, wires and conduits on cable trays in rigid floors
Construction	Minimum floor thickness of 150 mm and comprise aerated concrete or concrete with a minimum density of 650kg/m³

Fire & Sound classification

Cables ≤ Ø21mm, single or bundled on trays or ladders ≤ 500mm wide	EI 120 & E 240
Cables ≤ Ø80mm, single or bundled on trays or ladders	EI 60 & E 120
PVC conduits ≤ Ø16mm (C/U) on trays or ladders ≤ 500mm wide	EI 120 & E 180
Unsheathed wires/cables ≤ Ø24 mm on trays or ladders ≤ 500mm wide	EI 120 & E 120
Sound reduction (seal only)	48dB

Polyseam Ltd, 15 St Andrews Road, Huddersfield, West Yorkshire, HD1 6SB
Tel: +44 (0) 148 4421036
Email: post.uk@polyseam.com

Sheet size: **A4**	Drawn date & no: 6/3/19
Scale: **NTS**	Drawn by: K.B

Installation Instructions

1. Ensure the faces of the aperture opening are free of dust and any other contaminants. The faces may be moistened for better adhesion.
2. Bare metal pipes passing through the seal must be protected against corrosion using a suitable primer/protection system.
3. The seal can be positioned to either side of the construction or anywhere in between.
4. When installing Protecta® EX Mortar in hollow floor slabs or boards, level the fire seal with the soffit side. Ensure there is sufficient thickness of concrete below the void for the depth of mortar. Where this is not the case, tubular voids should be filled with stone wool normally the same thickness as the depth of the floor slab. Alternatively, simply fire seal on both sides.
5. Install a stone wool shutter board to achieve the required thickness of mortar. Make sure that this achieves a very tight seal – any small openings should be sealed with Protecta® FR Acrylic.
6. Pour clean water into a suitable mixing vessel and add the mortar to obtain the required consistency. Mix steadily at low speed and ensure that any lumps of powder are fully dispersed. Always add the mortar to the water, do not reverse this mixing process
7. Once the desired consistency is achieved pour or trowel the mortar onto the shutter board making sure that it flows into all corners and around services. Apply a firm pressure to the mortar to eliminate any trapped air bubbles. Build up to the required depth.

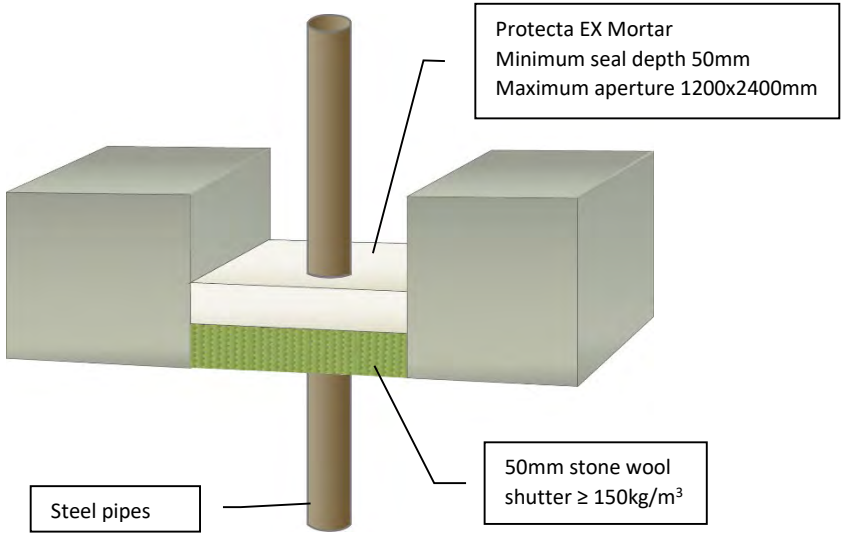

Minimum separations and limitations

An aperture can include several services, and they may also be different. The minimum permitted separation between adjacent seals/apertures is 200mm. Services should be a minimum of 30mm from seal edges. Services within the seal do not require a minimum separation, except pipes where combustible pipe insulation penetrates the seal and plastic pipe penetrations which should be a minimum of 30mm from other services in the aperture. The total amount of cross sections of services (including insulation) should not exceed 60% of the penetration area.

ETA 13/0672 & 18/0855

As a part of our policy of on-going product development and testing, we reserve the right to modify, alter or change product specifications without giving notice. All information contained in this document is given in good faith and is provided for guidance only. Any drawings provided are for illustrative purposes only. As Polyseam has no control over the methods or competence of installation and of prevailing site conditions, no warranties, expressed or implied, is intended to be given as to the actual performance of the product mentioned or referred to herein and no liability whatsoever will be accepted for any loss, damage or injury arising from the use of the information given.

For all technical details on the products specified please refer to the technical data sheets that can be found on www.protecta.eu

Signed and approved:

Client:

Job Title:

Products	Protecta EX Mortar Stone wool shutter
Application	Fire stopping of un-insulated steel pipes in rigid floors
Construction	Minimum floor thickness of 150 mm and comprise aerated concrete or concrete with a minimum density of 650kg/m³.

Fire & Sound classification

Steel pipes ≤ Ø16mm
EI 180 C/U & E 180 C/U

Sound reduction (seal only)
48dB

Polyseam Ltd, 15 St Andrews Road, Huddersfield, West Yorkshire, HD1 6SB
Tel: +44 (0) 148 4421036
Email: post.uk@polyseam.com

Sheet size: **A4**	Drawn date & no: 23/5/18
Scale: **NTS**	Drawn by: K.B

Installation Instructions

1. Ensure the faces of the aperture opening are free of dust and any other contaminants. The faces may be moistened for better adhesion.
2. Bare metal pipes passing through the seal must be protected against corrosion using a suitable primer/protection system.
3. The seal can be positioned to either side of the construction or anywhere in between.
4. When installing Protecta® EX Mortar in hollow floor slabs or boards, level the fire seal with the soffit side. Ensure there is sufficient thickness of concrete below the void for the depth of mortar. Where this is not the case, tubular voids should be filled with stone wool normally the same thickness as the depth of the floor slab. Alternatively, simply fire seal on both sides.
5. Install a shutter board to achieve the required thickness of mortar. Make sure that this achieves a very tight seal.
6. Pour clean water into a suitable mixing vessel and add the mortar to obtain the required consistency. Mix steadily at low speed and ensure that any lumps of powder are fully dispersed. Always add the mortar to the water, do not reverse this mixing process
7. Once the desired consistency is achieved pour or trowel the mortar onto the shutter board making sure that it flows into all corners and around services. Apply a firm pressure to the mortar to eliminate any trapped air bubbles. Build up to the required depth.

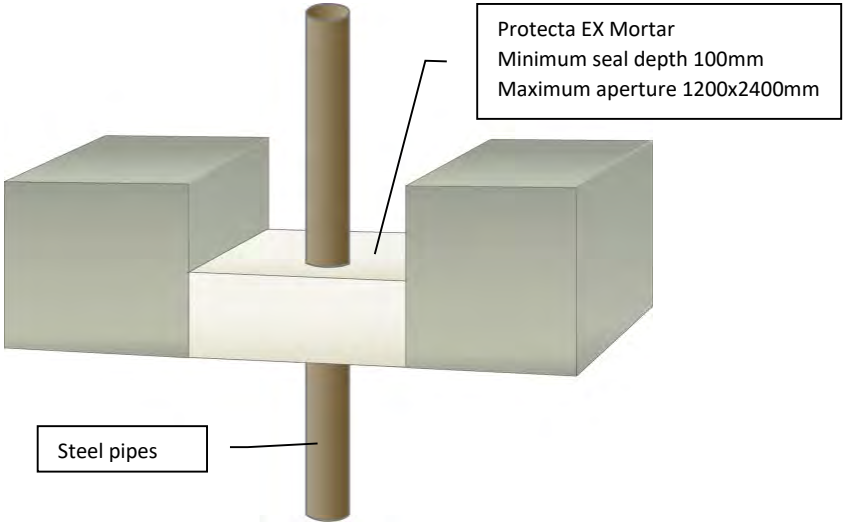

Loadbearing Properties

Soft body impact, serviceability 500Nm. Soft body impact, safety in use 700Nm. Hard body impact serviceability 6Nm. Hard body impact, safety in use 10Nm. Concentrated load to 15kN on size up to 1500mm x1000mm (no failure), 4.85kN on sizes up to 1200mm x 2400mm.

Minimum separations and limitations

An aperture can include several services, and they may also be different. The minimum permitted separation between adjacent seals/apertures is 200mm. Services should be a minimum of 30mm from seal edges. Services within the seal do not require a minimum separation, except pipes where combustible pipe insulation penetrates the seal and plastic pipe penetrations which should be a minimum of 30mm from other services in the aperture. The total amount of cross sections of services (including insulation) should not exceed 60% of the penetration area.

ETA 13/0672 & 18/0855

As a part of our policy of on-going product development and testing, we reserve the right to modify, alter or change product specifications without giving notice. All information contained in this document is given in good faith and is provided for guidance only. Any drawings provided are for illustrative purposes only. As Polyseam has no control over the methods or competence of installation and of prevailing site conditions, no warranties, expressed or implied, is intended to be given as to the actual performance of the product mentioned or referred to herein and no liability whatsoever will be accepted for any loss, damage or injury arising from the use of the information given.

For all technical details on the products specified please refer to the technical data sheets that can be found on www.protecta.eu

Signed and approved:

Client:

Job Title:

Products	Protecta EX Mortar
Application	Fire stopping of un-insulated steel pipes in rigid floors
Construction	Minimum floor thickness of 150 mm and comprise aerated concrete or concrete with a minimum density of 650kg/m³.

Fire & Sound classification

Steel pipes ≤ Ø16mm
EI 240 C/U & E 240 C/U

Sound reduction (seal only)
48dB

Polyseam Ltd, 15 St Andrews Road, Huddersfield, West Yorkshire, HD1 6SB
Tel: +44 (0) 148 4421036
Email: post.uk@polyseam.com

Sheet size: **A4**	Drawn date & no: 23/5/18
Scale: **NTS**	Drawn by: K.B

Installation Instructions

1. Ensure the faces of the aperture opening are free of dust and any other contaminants. The faces may be moistened for better adhesion.
2. The seal can be positioned to either side of the construction or anywhere in between.
3. When installing Protecta® EX Mortar in hollow floor slabs or boards, level the fire seal with the soffit side. Ensure there is sufficient thickness of concrete below the void for the depth of mortar. Where this is not the case, tubular voids should be filled with stone wool normally the same thickness as the depth of the floor slab. Alternatively, simply fire seal on both sides.
4. Install a shutter board to achieve the required thickness of mortar. Make sure that this achieves a very tight seal.
5. Pour clean water into a suitable mixing vessel and add the mortar to obtain the required consistency. Mix steadily at low speed and ensure that any lumps of powder are fully dispersed. Always add the mortar to the water, do not reverse this mixing process
6. Once the desired consistency is achieved pour or trowel the mortar onto the shutter board making sure that it flows into all corners and around services. Apply a firm pressure to the mortar to eliminate any trapped air bubbles. Build up to the required depth.

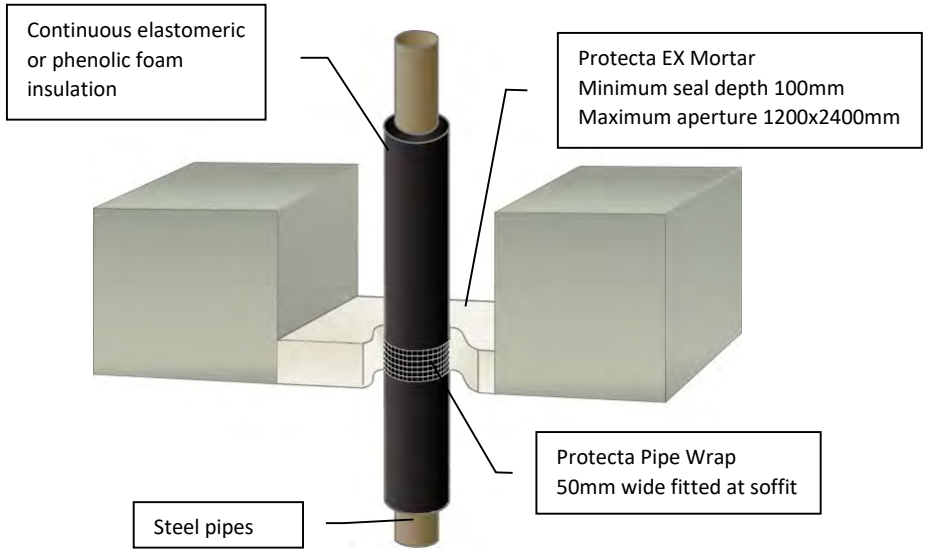

Loadbearing Properties

Soft body impact, serviceability 500Nm. Soft body impact, safety in use 700Nm. Hard body impact serviceability 6Nm. Hard body impact, safety in use 10Nm. Concentrated load to 15kN on size up to 1500mm x1000mm (no failure), 4.85kN on sizes up to 1200mm x 2400mm.

Minimum separations and limitations

An aperture can include several services, and they may also be different. The minimum permitted separation between adjacent seals/apertures is 200mm. Services should be a minimum of 30mm from seal edges. Services within the seal do not require a minimum separation, except pipes where combustible pipe insulation penetrates the seal and plastic pipe penetrations which should be a minimum of 30mm from other services in the aperture. The total amount of cross sections of services (including insulation) should not exceed 60% of the penetration area.

ETA 13/0672 & 18/0855

For all technical details on the products specified please refer to the technical data sheets that can be found on www.protecta.eu

Signed and approved:

Client:

Job Title:

Products	Protecta EX Mortar Protecta FR Pipe Wrap 25m
Application	Fire stopping of insulated steel pipes in rigid floors
Construction	Minimum floor thickness of 150 mm and comprise aerated concrete or concrete with a minimum density of 650kg/m³.

Fire & Sound classification

Steel pipes ≤ Ø40mm with 13mm continuous foam insulation and 1 layer of pipe wrap EI 180 C/U & E 180 C/U

Steel pipes ≤ Ø40mm with 14-25mm continuous foam insulation and 2 layers of pipe wrap EI 180 C/U & E 180 C/U

Steel pipes ≤ Ø165mm with 14 - 19mm continuous foam insulation and 1 layer of pipe wrap EI 120 C/U & E 180 C/U

Steel pipes ≤ Ø324mm with 25mm continuous foam insulation and 2 layers of pipe wrap EI 120 C/U & E 180 C/U

Steel pipes ≤ Ø324mm with 26 - 50mm continuous foam insulation and 3 layers of pipe wrap EI 120 C/U & E 120 C/U

Sound reduction (seal only) 48dB

Polyseam Ltd, 15 St Andrews Road, Huddersfield, West Yorkshire, HD1 6SB
Tel: +44 (0) 148 4421036
Email: post.uk@polyseam.com

Sheet size: **A4**	Drawn date & no: 4/3/19
Scale: **NTS**	Drawn by: K.B

Installation Instructions

1. Ensure the faces of the aperture opening are free of dust and any other contaminants. The faces may be moistened for better adhesion.
2. The seal can be positioned to either side of the construction or anywhere in between.
3. When installing Protecta® EX Mortar in hollow floor slabs or boards, level the fire seal with the soffit side. Ensure there is sufficient thickness of concrete below the void for the depth of mortar. Where this is not the case, tubular voids should be filled with stone wool normally the same thickness as the depth of the floor slab. Alternatively, simply fire seal on both sides.
4. Install a stone wool shutter board to achieve the required thickness of mortar. Make sure that this achieves a very tight seal – any small openings should be sealed with Protecta® FR Acrylic
5. Pour clean water into a suitable mixing vessel and add the mortar to obtain the required consistency. Mix steadily at low speed and ensure that any lumps of powder are fully dispersed. Always add the mortar to the water, do not reverse this mixing process
6. Once the desired consistency is achieved pour or trowel the mortar onto the shutter board making sure that it flows into all corners and around services. Apply a firm pressure to the mortar to eliminate any trapped air bubbles. Build up to the required depth.

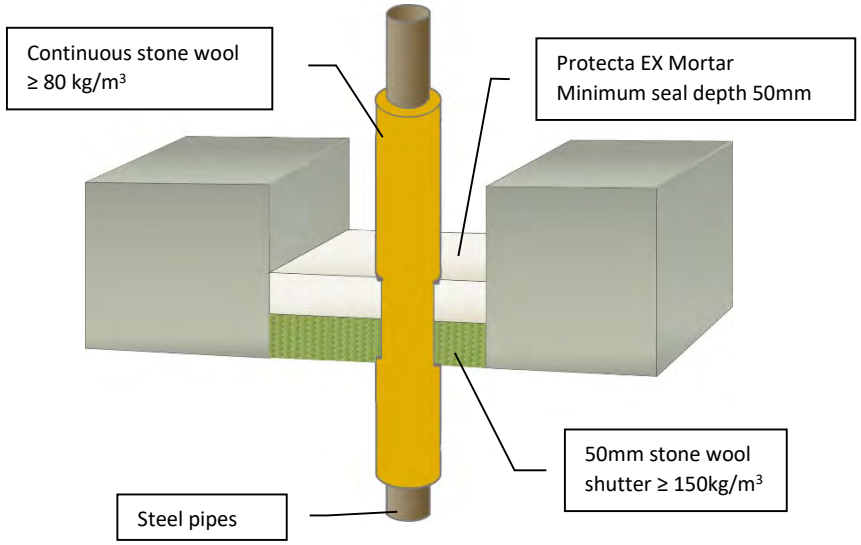

Minimum separations and limitations

An aperture can include several services, and they may also be different. The minimum permitted separation between adjacent seals/apertures is 200mm. Services should be a minimum of 30mm from seal edges. Services within the seal do not require a minimum separation, except pipes where combustible pipe insulation penetrates the seal and plastic pipe penetrations which should be a minimum of 30mm from other services in the aperture. The total amount of cross sections of services (including insulation) should not exceed 60% of the penetration area.

ETA 13/0672 & 18/0855

For all technical details on the products specified please refer to the technical data sheets that can be found on www.protecta.eu

Signed and approved:

Client:

Job Title:

Products	Protecta EX Mortar Stone wool shutter
Application	Fire stopping of insulated steel pipes in rigid floors
Construction	Minimum floor thickness of 150 mm and comprise aerated concrete or concrete with a minimum density of 650kg/m³

Fire & Sound classification

Steel pipes ≤ Ø324mm with 20-80mm thick stone wool insulation in maximum apertures 1200 x 2400mm EI 180 C/U & E 180 C/U

Steel pipes ≤ Ø324mm with 20-80mm thick stone wool insulation in maximum apertures 550 x 1100mm EI 240 C/U & E 240 C/U

Sound reduction (seal only) 48dB

Polyseam Ltd, 15 St Andrews Road, Huddersfield, West Yorkshire, HD1 6SB
Tel: +44 (0) 148 4421036
Email: post.uk@polyseam.com

Sheet size: **A4**	Drawn date & no: 16/1/17
Scale: **NTS**	Drawn by: K.B

Installation Instructions

1. Ensure the faces of the aperture opening are free of dust and any other contaminants. The faces may be moistened for better adhesion.
2. The seal can be positioned to either side of the construction or anywhere in between.
3. When installing Protecta® EX Mortar in hollow floor slabs or boards, level the fire seal with the soffit side. Ensure there is sufficient thickness of concrete below the void for the depth of mortar. Where this is not the case, tubular voids should be filled with stone wool normally the same thickness as the depth of the floor slab. Alternatively, simply fire seal on both sides.
4. Install a shutter board to achieve the required thickness of mortar. Make sure that this achieves a very tight seal.
5. Pour clean water into a suitable mixing vessel and add the mortar to obtain the required consistency. Mix steadily at low speed and ensure that any lumps of powder are fully dispersed. Always add the mortar to the water, do not reverse this mixing process
6. Once the desired consistency is achieved pour or trowel the mortar onto the shutter board making sure that it flows into all corners and around services. Apply a firm pressure to the mortar to eliminate any trapped air bubbles. Build up to the required depth.

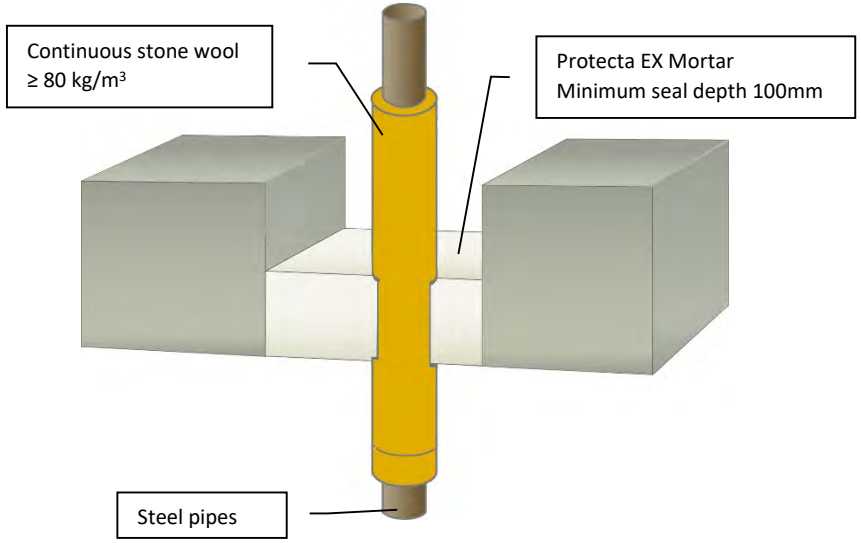

Loadbearing Properties

Soft body impact, serviceability 500Nm. Soft body impact, safety in use 700Nm. Hard body impact serviceability 6Nm. Hard body impact, safety in use 10Nm. Concentrated load to 15kN on size up to 1500mm x1000mm (no failure), 4.85kN on sizes up to 1200mm x 2400mm.

Minimum separations and limitations

An aperture can include several services, and they may also be different. The minimum permitted separation between adjacent seals/apertures is 200mm. Services should be a minimum of 30mm from seal edges. Services within the seal do not require a minimum separation, except pipes where combustible pipe insulation penetrates the seal and plastic pipe penetrations which should be a minimum of 30mm from other services in the aperture. The total amount of cross sections of services (including insulation) should not exceed 60% of the penetration area.

ETA 13/0672 & 18/0855

For all technical details on the products specified please refer to the technical data sheets that can be found on www.protecta.eu

Signed and approved:

Client:

Job Title:

Products	Protecta EX Mortar
Application	Fire stopping of insulated steel pipes in rigid floors
Construction	Minimum floor thickness of 150 mm and comprise aerated concrete or concrete with a minimum density of 650kg/m³

Fire & Sound classification

Steel pipes ≤ Ø324mm with 20-80mm thick stone wool insulation in maximum apertures 1200 x 2400mm

EI 240 C/U & E 240 C/U

Sound reduction (seal only)

48dB

Protecta®

Polyseam Ltd, 15 St Andrews Road, Huddersfield, West Yorkshire, HD1 6SB
Tel: +44 (0) 148 4421036
Email: post.uk@polyseam.com

Sheet size: **A4**	Drawn date & no: 23/5/18
Scale: **NTS**	Drawn by: K.B

Installation Instructions

1. Ensure the faces of the aperture opening are free of dust and any other contaminants. The faces may be moistened for better adhesion.
2. Bare metal pipes passing through the seal must be protected against corrosion using a suitable primer/protection system.
3. The seal can be positioned to either side of the construction or anywhere in between.
4. When installing Protecta® EX Mortar in hollow floor slabs or boards, level the fire seal with the soffit side. Ensure there is sufficient thickness of concrete below the void for the depth of mortar. Where this is not the case, tubular voids should be filled with stone wool normally the same thickness as the depth of the floor slab. Alternatively, simply fire seal on both sides.
5. Install a stone wool shutter board to achieve the required thickness of mortar. Make sure that this achieves a very tight seal – any small openings should be sealed with Protecta® FR Acrylic
6. Pour clean water into a suitable mixing vessel and add the mortar to obtain the required consistency. Mix steadily at low speed and ensure that any lumps of powder are fully dispersed. Always add the mortar to the water, do not reverse this mixing process
7. Once the desired consistency is achieved pour or trowel the mortar onto the shutter board making sure that it flows into all corners and around services. Apply a firm pressure to the mortar to eliminate any trapped air bubbles. Build up to the required depth.

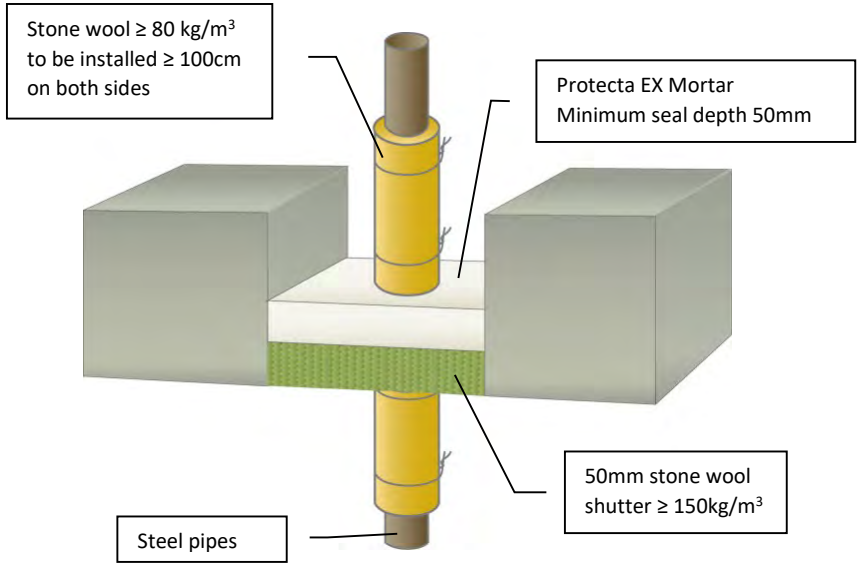

Minimum separations and limitations

An aperture can include several services, and they may also be different. The minimum permitted separation between adjacent seals/apertures is 200mm. Services should be a minimum of 30mm from seal edges. Services within the seal do not require a minimum separation, except pipes where combustible pipe insulation penetrates the seal and plastic pipe penetrations which should be a minimum of 30mm from other services in the aperture. The total amount of cross sections of services (including insulation) should not exceed 60% of the penetration area.

ETA 13/0672 & 18/0855

For all technical details on the products specified please refer to the technical data sheets that can be found on www.protecta.eu

Signed and approved:

Client:

Job Title:

Products	Protecta EX Mortar Stone wool shutter
Application	Fire stopping of insulated steel pipes in rigid floors
Construction	Minimum floor thickness of 150 mm and comprise aerated concrete or concrete with a minimum density of 650kg/m³.

Fire & Sound classification

Steel pipes ≤ Ø40mm with ≥ 20mm stone wool insulation in maximum apertures
1200 x 2400mm EI 180 C/U & E 180 C/U
Steel pipes ≤ Ø40mm with ≥ 20mm stone wool insulation in maximum apertures
280 x 280mm EI 240 C/U & E 240 C/U
Steel pipes ≤ Ø219mm with ≥ 30mm stone wool insulation in maximum apertures
1200 x 2400mm EI 90 C/U & E 180 C/U
Steel pipes ≤ Ø219mm with ≥ 30mm stone wool insulation in maximum apertures
280 x 280mm EI 90 C/U & E 240 C/U

Sound reduction (seal only) 48dB

Polyseam Ltd, 15 St Andrews Road, Huddersfield, West Yorkshire, HD1 6SB
Tel: +44 (0) 148 4421036
Email: post.uk@polyseam.com

Sheet size: **A4**	Drawn date & no: 19/8/15
Scale: **NTS**	Drawn by: K.B

Installation Instructions

1. Ensure the faces of the aperture opening are free of dust and any other contaminants. The faces may be moistened for better adhesion.
2. Bare metal pipes passing through the seal must be protected against corrosion using a suitable primer/protection system.
3. The seal can be positioned to either side of the construction or anywhere in between.
4. When installing Protecta® EX Mortar in hollow floor slabs or boards, level the fire seal with the soffit side. Ensure there is sufficient thickness of concrete below the void for the depth of mortar. Where this is not the case, tubular voids should be filled with stone wool normally the same thickness as the depth of the floor slab. Alternatively, simply fire seal on both sides.
5. Install a shutter board to achieve the required thickness of mortar. Make sure that this achieves a very tight seal.
6. Pour clean water into a suitable mixing vessel and add the mortar to obtain the required consistency. Mix steadily at low speed and ensure that any lumps of powder are fully dispersed. Always add the mortar to the water, do not reverse this mixing process
7. Once the desired consistency is achieved pour or trowel the mortar onto the shutter board making sure that it flows into all corners and around services. Apply a firm pressure to the mortar to eliminate any trapped air bubbles. Build up to the required depth.

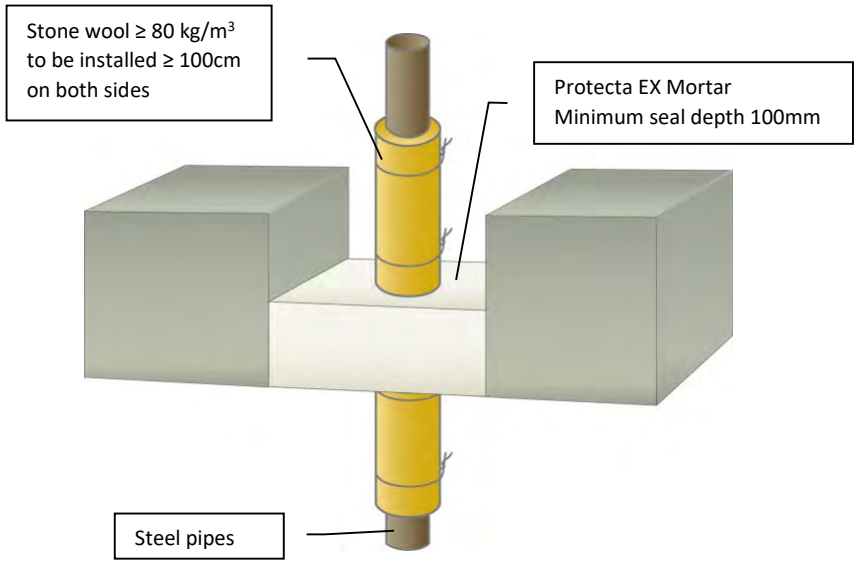

Loadbearing Properties

Soft body impact, serviceability 500Nm. Soft body impact, safety in use 700Nm. Hard body impact serviceability 6Nm. Hard body impact, safety in use 10Nm. Concentrated load to 15kN on size up to 1500mm x1000mm (no failure), 4.85kN on sizes up to 1200mm x 2400mm.

Minimum separations and limitations

An aperture can include several services, and they may also be different. The minimum permitted separation between adjacent seals/apertures is 200mm. Services should be a minimum of 30mm from seal edges. Services within the seal do not require a minimum separation, except pipes where combustible pipe insulation penetrates the seal and plastic pipe penetrations which should be a minimum of 30mm from other services in the aperture. The total amount of cross sections of services (including insulation) should not exceed 60% of the penetration area.

ETA 13/0672 & 18/0855

For all technical details on the products specified please refer to the technical data sheets that can be found on www.protecta.eu

Signed and approved:

Client:

Job Title:

Products	Protecta EX Mortar
Application	Fire stopping of insulated steel pipes in rigid floors
Construction	Minimum floor thickness of 150 mm and comprise aerated concrete or concrete with a minimum density of 650kg/m³.

Fire & Sound classification

Steel pipes ≤ Ø40mm with ≥ 20mm stone wool insulation in maximum apertures
1200 x 2400mm EI 240 C/U & E 240 C/U

Steel pipes ≤ Ø219mm with ≥ 30mm stone wool insulation in maximum apertures
1200 x 2400mm EI 120 C/U & E 240 C/U

Sound reduction (seal only) 48dB

Polyseam Ltd, 15 St Andrews Road, Huddersfield, West Yorkshire, HD1 6SB
Tel: +44 (0) 148 4421036
Email: post.uk@polyseam.com

Sheet size: **A4**	Drawn date & no: 23/5/18
Scale: **NTS**	Drawn by: K.B

Installation Instructions

1. Ensure the faces of the aperture opening are free of dust and any other contaminants. The faces may be moistened for better adhesion.
2. Bare metal pipes passing through the seal must be protected against corrosion using a suitable primer/protection system.
3. The seal can be positioned to either side of the construction or anywhere in between.
4. When installing Protecta® EX Mortar in hollow floor slabs or boards, level the fire seal with the soffit side. Ensure there is sufficient thickness of concrete below the void for the depth of mortar. Where this is not the case, tubular voids should be filled with stone wool normally the same thickness as the depth of the floor slab. Alternatively, simply fire seal on both sides.
5. Install a stone wool shutter board to achieve the required thickness of mortar. Make sure that this achieves a very tight seal – any small openings should be sealed with Protecta® FR Acrylic.
6. Pour clean water into a suitable mixing vessel and add the mortar to obtain the required consistency. Mix steadily at low speed and ensure that any lumps of powder are fully dispersed. Always add the mortar to the water, do not reverse this mixing process
7. Once the desired consistency is achieved pour or trowel the mortar onto the shutter board making sure that it flows into all corners and around services. Apply a firm pressure to the mortar to eliminate any trapped air bubbles. Build up to the required depth.

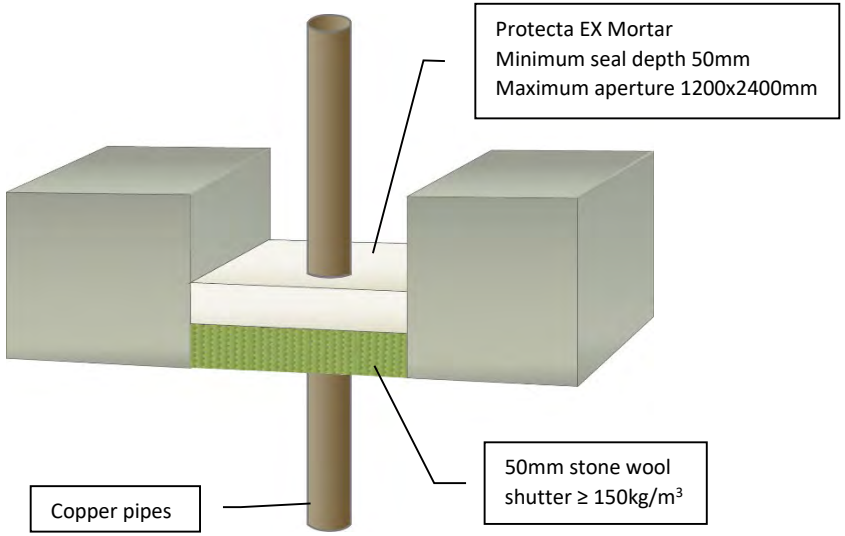

Minimum separations and limitations

An aperture can include several services, and they may also be different. The minimum permitted separation between adjacent seals/apertures is 200mm. Services should be a minimum of 30mm from seal edges. Services within the seal do not require a minimum separation, except pipes where combustible pipe insulation penetrates the seal and plastic pipe penetrations which should be a minimum of 30mm from other services in the aperture. The total amount of cross sections of services (including insulation) should not exceed 60% of the penetration area.

ETA 13/0672 & 18/0855

As a part of our policy of on-going product development and testing, we reserve the right to modify, alter or change product specifications without giving notice. All information contained in this document is given in good faith and is provided for guidance only. Any drawings provided are for illustrative purposes only. As Polyseam has no control over the methods or competence of installation and of prevailing site conditions, no warranties, expressed or implied, is intended to be given as to the actual performance of the product mentioned or referred to herein and no liability whatsoever will be accepted for any loss, damage or injury arising from the use of the information given.

For all technical details on the products specified please refer to the technical data sheets that can be found on www.protecta.eu

Signed and approved:

Client:

Job Title:

Products	Protecta EX Mortar Stone wool shutter
Application	Fire stopping of un-insulated copper pipes in rigid floors
Construction	Minimum floor thickness of 150 mm and comprise aerated concrete or concrete with a minimum density of 650kg/m³.

Fire & Sound classification

Copper pipes Ø6mm
EI 120 C/C & E 180 C/C

Copper pipes ≤ Ø15mm
EI 30 C/C & E 180 C/C

Sound reduction (seal only)
48dB

Polyseam Ltd, 15 St Andrews Road, Huddersfield, West Yorkshire, HD1 6SB
Tel: +44 (0) 148 4421036
Email: post.uk@polyseam.com

Sheet size: **A4**	Drawn date & no: 23/5/18
Scale: **NTS**	Drawn by: K.B

Installation Instructions

1. Ensure the faces of the aperture opening are free of dust and any other contaminants. The faces may be moistened for better adhesion.
2. Bare metal pipes passing through the seal must be protected against corrosion using a suitable primer/protection system.
3. The seal can be positioned to either side of the construction or anywhere in between.
4. When installing Protecta® EX Mortar in hollow floor slabs or boards, level the fire seal with the soffit side. Ensure there is sufficient thickness of concrete below the void for the depth of mortar. Where this is not the case, tubular voids should be filled with stone wool normally the same thickness as the depth of the floor slab. Alternatively, simply fire seal on both sides.
5. Install a shutter board to achieve the required thickness of mortar. Make sure that this achieves a very tight seal.
6. Pour clean water into a suitable mixing vessel and add the mortar to obtain the required consistency. Mix steadily at low speed and ensure that any lumps of powder are fully dispersed. Always add the mortar to the water, do not reverse this mixing process
7. Once the desired consistency is achieved pour or trowel the mortar onto the shutter board making sure that it flows into all corners and around services. Apply a firm pressure to the mortar to eliminate any trapped air bubbles. Build up to the required depth.

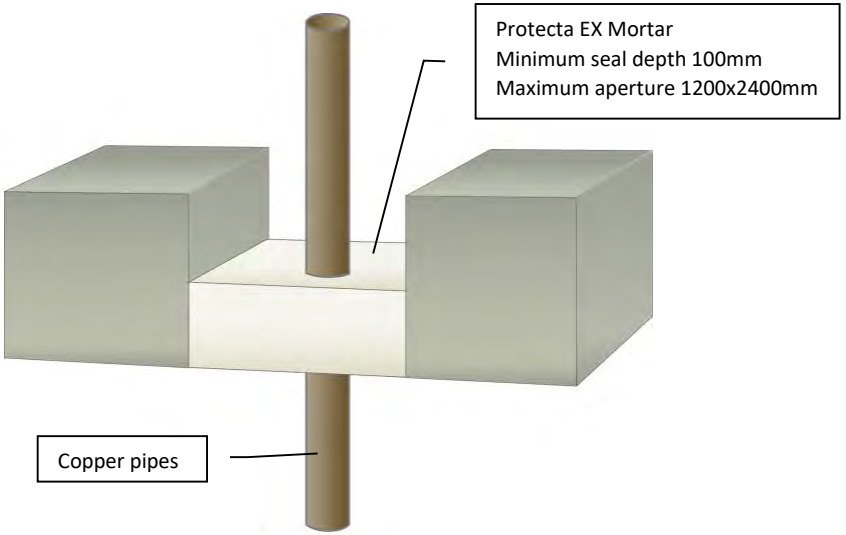

Loadbearing Properties

Soft body impact, serviceability 500Nm. Soft body impact, safety in use 700Nm. Hard body impact serviceability 6Nm. Hard body impact, safety in use 10Nm. Concentrated load to 15kN on size up to 1500mm x1000mm (no failure), 4.85kN on sizes up to 1200mm x 2400mm.

Minimum separations and limitations

An aperture can include several services, and they may also be different. The minimum permitted separation between adjacent seals/apertures is 200mm. Services should be a minimum of 30mm from seal edges. Services within the seal do not require a minimum separation, except pipes where combustible pipe insulation penetrates the seal and plastic pipe penetrations which should be a minimum of 30mm from other services in the aperture. The total amount of cross sections of services (including insulation) should not exceed 60% of the penetration area.

ETA 13/0672 & 18/0855

For all technical details on the products specified please refer to the technical data sheets that can be found on www.protecta.eu

Signed and approved:

Client:

Job Title:

Products	Protecta EX Mortar
Application	Fire stopping of un-insulated copper pipes in rigid floors
Construction	Minimum floor thickness of 150 mm and comprise aerated concrete or concrete with a minimum density of 650kg/m³.

Fire & Sound classification

Copper pipes Ø6mm	EI 120 C/C & E 180 C/C
Copper pipes ≤ Ø15mm	EI 30 C/C & E 180 C/C
Copper pipes ≤ Ø54mm	EI 20 C/C & E 120 C/C
Sound reduction (seal only)	48dB

Polyseam Ltd, 15 St Andrews Road, Huddersfield, West Yorkshire, HD1 6SB
Tel: +44 (0) 148 4421036
Email: post.uk@polyseam.com

Sheet size: **A4**	Drawn date & no: 23/5/18
Scale: **NTS**	Drawn by: K.B

Installation Instructions

1. Ensure the faces of the aperture opening are free of dust and any other contaminants. The faces may be moistened for better adhesion.
2. The seal can be positioned to either side of the construction or anywhere in between.
3. When installing Protecta® EX Mortar in hollow floor slabs or boards, level the fire seal with the soffit side. Ensure there is sufficient thickness of concrete below the void for the depth of mortar. Where this is not the case, tubular voids should be filled with stone wool normally the same thickness as the depth of the floor slab. Alternatively, simply fire seal on both sides.
4. Install a shutter board to achieve the required thickness of mortar. Make sure that this achieves a very tight seal.
5. Pour clean water into a suitable mixing vessel and add the mortar to obtain the required consistency. Mix steadily at low speed and ensure that any lumps of powder are fully dispersed. Always add the mortar to the water, do not reverse this mixing process
6. Once the desired consistency is achieved pour or trowel the mortar onto the shutter board making sure that it flows into all corners and around services. Apply a firm pressure to the mortar to eliminate any trapped air bubbles. Build up to the required depth.

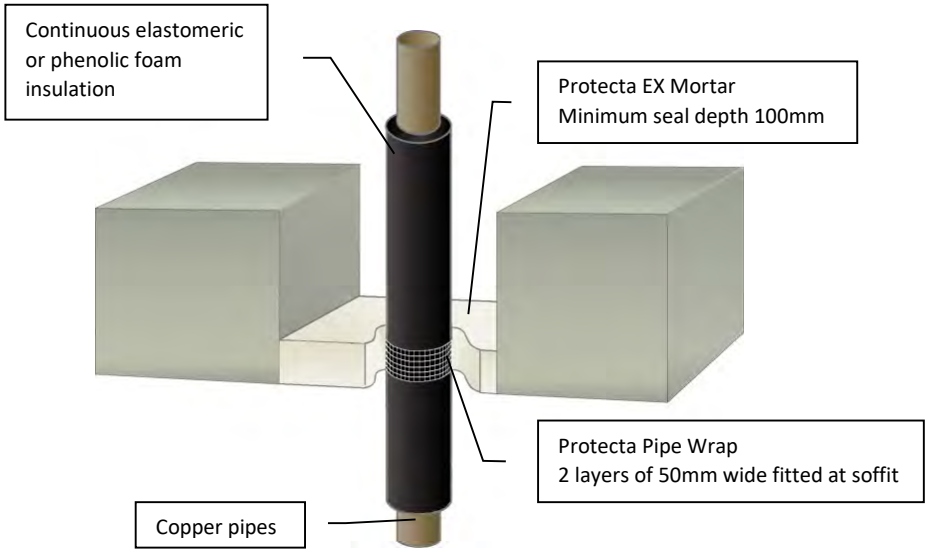

Loadbearing Properties

Soft body impact, serviceability 500Nm. Soft body impact, safety in use 700Nm. Hard body impact serviceability 6Nm. Hard body impact, safety in use 10Nm. Concentrated load to 15kN on size up to 1500mm x1000mm (no failure), 4.85kN on sizes up to 1200mm x 2400mm.

Minimum separations and limitations

An aperture can include several services, and they may also be different. The minimum permitted separation between adjacent seals/apertures is 200mm. Services should be a minimum of 30mm from seal edges. Services within the seal do not require a minimum separation, except pipes where combustible pipe insulation penetrates the seal and plastic pipe penetrations which should be a minimum of 30mm from other services in the aperture. The total amount of cross sections of services (including insulation) should not exceed 60% of the penetration area.

ETA 13/0672 & 18/0855

Client:

Job Title:

Products	Protecta EX Mortar Protecta FR Pipe Wrap 25m
Application	Fire stopping of insulated copper pipes in rigid floors
Construction	Minimum floor thickness of 150 mm and comprise aerated concrete or concrete with a minimum density of 650kg/m³

Fire & Sound classification

Copper pipes ≤ Ø12mm with 9mm foam insulation in maximum apertures 1200 x 2400mm
EI 240 C/C & E 240 C/C

Copper pipes ≤ Ø54mm with 13 - 25mm foam insulation in maximum apertures 1200 x 2400mm
EI 60 C/C & E 240 C/C

Sound reduction (seal only)
48dB

Polyseam Ltd, 15 St Andrews Road, Huddersfield, West Yorkshire, HD1 6SB
Tel: +44 (0) 148 4421036
Email: post.uk@polyseam.com

For all technical details on the products specified please refer to the technical data sheets that can be found on www.protecta.eu

Signed and approved:

Sheet size: **A4**	Drawn date & no: 4/3/19
Scale: **NTS**	Drawn by: K.B

Installation Instructions

1. Ensure the faces of the aperture opening are free of dust and any other contaminants. The faces may be moistened for better adhesion.
2. The seal can be positioned to either side of the construction or anywhere in between.
3. When installing Protecta® EX Mortar in hollow floor slabs or boards, level the fire seal with the soffit side. Ensure there is sufficient thickness of concrete below the void for the depth of mortar. Where this is not the case, tubular voids should be filled with stone wool normally the same thickness as the depth of the floor slab. Alternatively, simply fire seal on both sides.
4. Install a stone wool shutter board to achieve the required thickness of mortar. Make sure that this achieves a very tight seal – any small openings should be sealed with Protecta® FR Acrylic
5. Pour clean water into a suitable mixing vessel and add the mortar to obtain the required consistency. Mix steadily at low speed and ensure that any lumps of powder are fully dispersed. Always add the mortar to the water, do not reverse this mixing process
6. Once the desired consistency is achieved pour or trowel the mortar onto the shutter board making sure that it flows into all corners and around services. Apply a firm pressure to the mortar to eliminate any trapped air bubbles. Build up to the required depth.

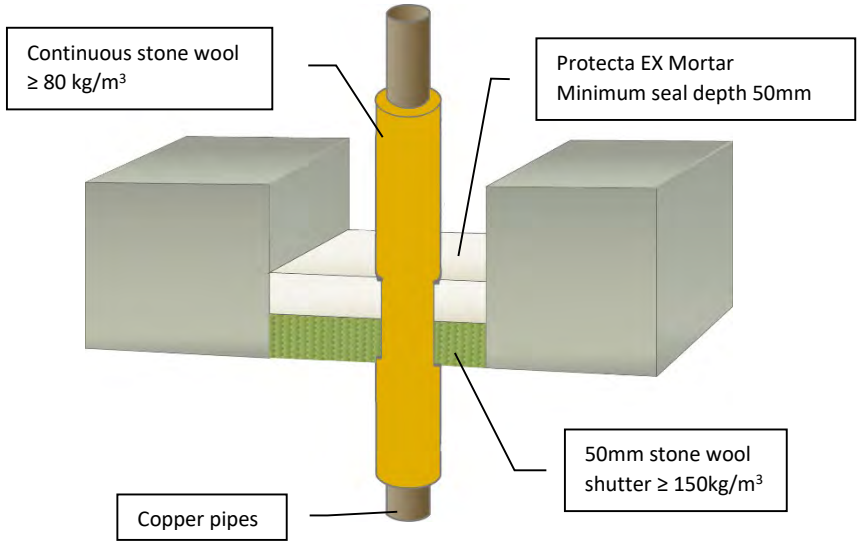

Minimum separations and limitations

An aperture can include several services, and they may also be different. The minimum permitted separation between adjacent seals/apertures is 200mm. Services should be a minimum of 30mm from seal edges. Services within the seal do not require a minimum separation, except pipes where combustible pipe insulation penetrates the seal and plastic pipe penetrations which should be a minimum of 30mm from other services in the aperture. The total amount of cross sections of services (including insulation) should not exceed 60% of the penetration area.

ETA 13/0672 & 18/0855

For all technical details on the products specified please refer to the technical data sheets that can be found on www.protecta.eu

Signed and approved:

Client:

Job Title:

Products	Protecta EX Mortar Stone wool shutter
Application	Fire stopping of insulated copper pipes in rigid floors
Construction	Minimum floor thickness of 150 mm and comprise aerated concrete or concrete with a minimum density of 650kg/m³

Fire & Sound classification

Copper pipes ≤ Ø54mm with 20-80mm thick stone wool insulation in maximum apertures 1200 x 2400mm

EI 120 C/C & E 180 C/C

Sound reduction (seal only)

48dB

Polyseam Ltd, 15 St Andrews Road, Huddersfield, West Yorkshire, HD1 6SB
Tel: +44 (0) 148 4421036
Email: post.uk@polyseam.com

Sheet size: **A4**	Drawn date & no: 23/5/18
Scale: **NTS**	Drawn by: K.B

Installation Instructions

1. Ensure the faces of the aperture opening are free of dust and any other contaminants. The faces may be moistened for better adhesion.
2. The seal can be positioned to either side of the construction or anywhere in between.
3. When installing Protecta® EX Mortar in hollow floor slabs or boards, level the fire seal with the soffit side. Ensure there is sufficient thickness of concrete below the void for the depth of mortar. Where this is not the case, tubular voids should be filled with stone wool normally the same thickness as the depth of the floor slab. Alternatively, simply fire seal on both sides.
4. Install a shutter board to achieve the required thickness of mortar. Make sure that this achieves a very tight seal.
5. Pour clean water into a suitable mixing vessel and add the mortar to obtain the required consistency. Mix steadily at low speed and ensure that any lumps of powder are fully dispersed. Always add the mortar to the water, do not reverse this mixing process
6. Once the desired consistency is achieved pour or trowel the mortar onto the shutter board making sure that it flows into all corners and around services. Apply a firm pressure to the mortar to eliminate any trapped air bubbles. Build up to the required depth.

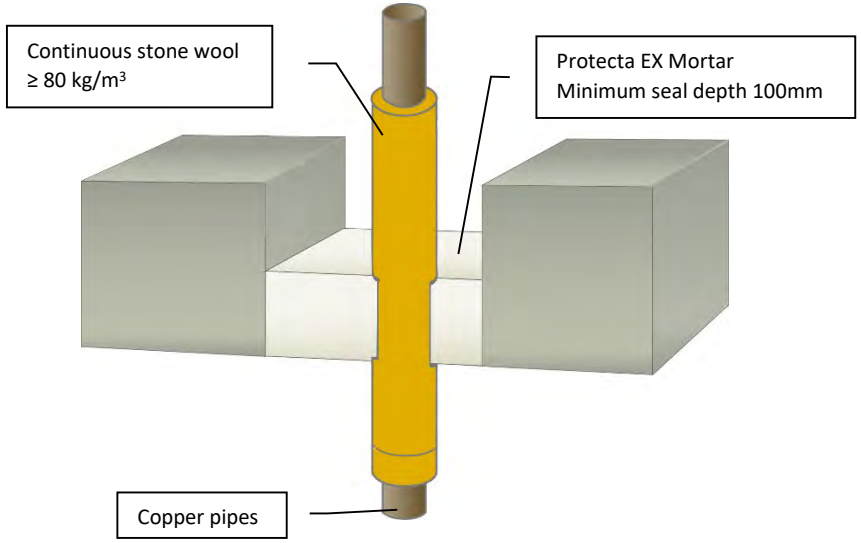

Loadbearing Properties

Soft body impact, serviceability 500Nm. Soft body impact, safety in use 700Nm. Hard body impact serviceability 6Nm. Hard body impact, safety in use 10Nm. Concentrated load to 15kN on size up to 1500mm x1000mm (no failure), 4.85kN on sizes up to 1200mm x 2400mm.

Minimum separations and limitations

An aperture can include several services, and they may also be different. The minimum permitted separation between adjacent seals/apertures is 200mm. Services should be a minimum of 30mm from seal edges. Services within the seal do not require a minimum separation, except pipes where combustible pipe insulation penetrates the seal and plastic pipe penetrations which should be a minimum of 30mm from other services in the aperture. The total amount of cross sections of services (including insulation) should not exceed 60% of the penetration area.

ETA 13/0672 & 18/0855

For all technical details on the products specified please refer to the technical data sheets that can be found on www.protecta.eu

Signed and approved:

Client:

Job Title:

Products	Protecta EX Mortar
Application	Fire stopping of insulated copper pipes in rigid floors
Construction	Minimum floor thickness of 150 mm and comprise aerated concrete or concrete with a minimum density of 650kg/m³

Fire & Sound classification

Copper pipes ≤ Ø54mm with 20-80mm thick stone wool insulation in maximum apertures 1200 x 2400mm

EI 120 C/C & E 180 C/C

Sound reduction (seal only)

48dB

Polyseam Ltd, 15 St Andrews Road, Huddersfield, West Yorkshire, HD1 6SB
Tel: +44 (0) 148 4421036
Email: post.uk@polyseam.com

Sheet size: **A4**	Drawn date & no: 23/5/18
Scale: **NTS**	Drawn by: K.B

Installation Instructions

1. Ensure the faces of the aperture opening are free of dust and any other contaminants. The faces may be moistened for better adhesion.
2. Bare metal pipes passing through the seal must be protected against corrosion using a suitable primer/protection system.
3. The seal can be positioned to either side of the construction or anywhere in between.
4. When installing Protecta® EX Mortar in hollow floor slabs or boards, level the fire seal with the soffit side. Ensure there is sufficient thickness of concrete below the void for the depth of mortar. Where this is not the case, tubular voids should be filled with stone wool normally the same thickness as the depth of the floor slab. Alternatively, simply fire seal on both sides.
5. Install a stone wool shutter board to achieve the required thickness of mortar. Make sure that this achieves a very tight seal – any small openings should be sealed with Protecta® FR Acrylic
6. Pour clean water into a suitable mixing vessel and add the mortar to obtain the required consistency. Mix steadily at low speed and ensure that any lumps of powder are fully dispersed. Always add the mortar to the water, do not reverse this mixing process
7. Once the desired consistency is achieved pour or trowel the mortar onto the shutter board making sure that it flows into all corners and around services. Apply a firm pressure to the mortar to eliminate any trapped air bubbles. Build up to the required depth.

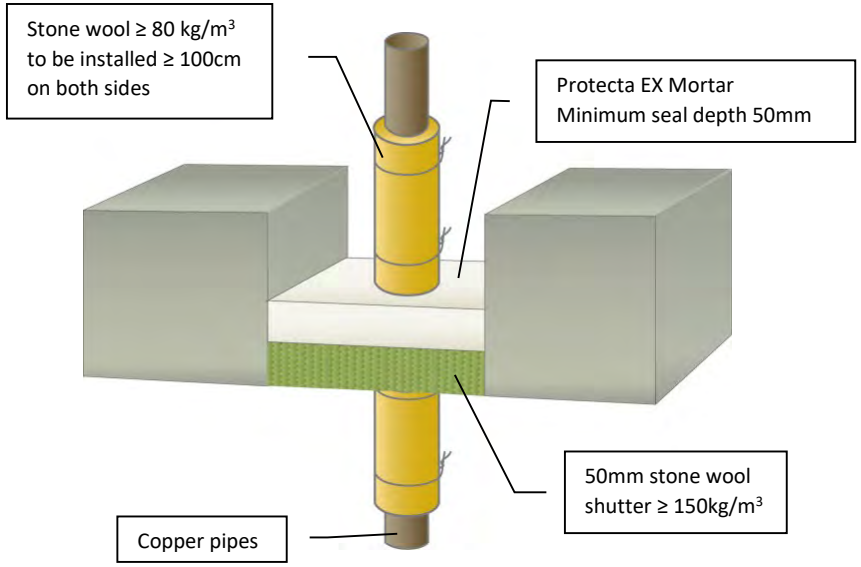

Minimum separations and limitations

An aperture can include several services, and they may also be different. The minimum permitted separation between adjacent seals/apertures is 200mm. Services should be a minimum of 30mm from seal edges. Services within the seal do not require a minimum separation, except pipes where combustible pipe insulation penetrates the seal and plastic pipe penetrations which should be a minimum of 30mm from other services in the aperture. The total amount of cross sections of services (including insulation) should not exceed 60% of the penetration area.

ETA 13/0672 & 18/0855

For all technical details on the products specified please refer to the technical data sheets that can be found on www.protecta.eu

Signed and approved:

Client:

Job Title:

Products	Protecta EX Mortar Stone wool shutter
Application	Fire stopping of insulated copper pipes in rigid floors
Construction	Minimum floor thickness of 150 mm and comprise aerated concrete or concrete with a minimum density of 650kg/m³.

Fire & Sound classification

Copper pipes ≤ Ø12mm with ≥ 20mm stone wool insulation in maximum apertures
70 x 70mm EI 240 C/C & E 240 C/C

Copper pipes ≤ Ø54mm with ≥ 20mm stone wool insulation in maximum apertures
1200 x 2400mm EI 180 C/C & E 180 C/C

Copper pipes ≤ Ø54mm with ≥ 20mm stone wool insulation in maximum apertures
115 x 115mm EI 180 C/C & E 240 C/C

Sound reduction (seal only) 48dB

Polyseam Ltd, 15 St Andrews Road, Huddersfield, West Yorkshire, HD1 6SB
Tel: +44 (0) 148 4421036
Email: post.uk@polyseam.com

Sheet size: **A4**	Drawn date & no: 20/8/15
Scale: **NTS**	Drawn by: K.B

Installation Instructions

1. Ensure the faces of the aperture opening are free of dust and any other contaminants. The faces may be moistened for better adhesion.
2. Bare metal pipes passing through the seal must be protected against corrosion using a suitable primer/protection system.
3. The seal can be positioned to either side of the construction or anywhere in between.
4. When installing Protecta® EX Mortar in hollow floor slabs or boards, level the fire seal with the soffit side. Ensure there is sufficient thickness of concrete below the void for the depth of mortar. Where this is not the case, tubular voids should be filled with stone wool normally the same thickness as the depth of the floor slab. Alternatively, simply fire seal on both sides.
5. Install a shutter board to achieve the required thickness of mortar. Make sure that this achieves a very tight seal.
6. Pour clean water into a suitable mixing vessel and add the mortar to obtain the required consistency. Mix steadily at low speed and ensure that any lumps of powder are fully dispersed. Always add the mortar to the water, do not reverse this mixing process
7. Once the desired consistency is achieved pour or trowel the mortar onto the shutter board making sure that it flows into all corners and around services. Apply a firm pressure to the mortar to eliminate any trapped air bubbles. Build up to the required depth.

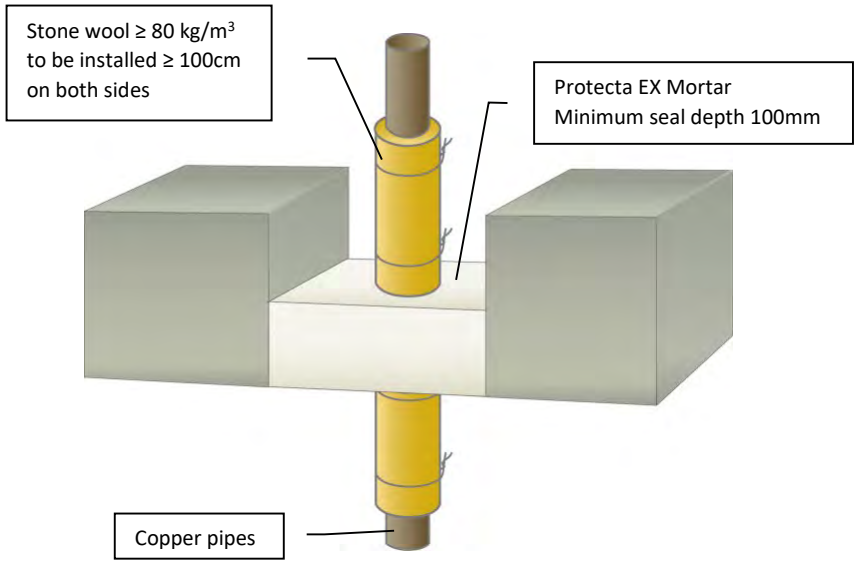

Loadbearing Properties

Soft body impact, serviceability 500Nm. Soft body impact, safety in use 700Nm. Hard body impact serviceability 6Nm. Hard body impact, safety in use 10Nm. Concentrated load to 15kN on size up to 1500mm x1000mm (no failure), 4.85kN on sizes up to 1200mm x 2400mm.

Minimum separations and limitations

An aperture can include several services, and they may also be different. The minimum permitted separation between adjacent seals/apertures is 200mm. Services should be a minimum of 30mm from seal edges. Services within the seal do not require a minimum separation, except pipes where combustible pipe insulation penetrates the seal and plastic pipe penetrations which should be a minimum of 30mm from other services in the aperture. The total amount of cross sections of services (including insulation) should not exceed 60% of the penetration area.

ETA 13/0672 & 18/0855

For all technical details on the products specified please refer to the technical data sheets that can be found on www.protecta.eu

Signed and approved:

Client:

Job Title:

Products	Protecta EX Mortar
Application	Fire stopping of insulated copper pipes in rigid floors
Construction	Minimum floor thickness of 150 mm and comprise aerated concrete or concrete with a minimum density of 650kg/m³.

Fire & Sound classification

Copper pipes ≤ Ø12mm with ≥ 20mm stone wool insulation in maximum apertures 1200 x 2400mm
EI 240 C/C & E 240 C/C

Copper pipes ≤ Ø54mm with ≥ 20mm stone wool insulation in maximum apertures 1200 x 2400mm
EI 180 C/C & E 240 C/C

Sound reduction (seal only)
48dB

Polyseam Ltd, 15 St Andrews Road, Huddersfield, West Yorkshire, HD1 6SB
Tel: +44 (0) 148 4421036
Email: post.uk@polyseam.com

Sheet size: **A4**	Drawn date & no: 23/5/18
Scale: **NTS**	Drawn by: K.B

Installation Instructions

1. Ensure the faces of the aperture opening are free of dust and any other contaminants. The faces may be moistened for better adhesion.
2. Bare metal pipes passing through the seal must be protected against corrosion using a suitable primer/protection system.
3. The seal can be positioned to either side of the construction or anywhere in between.
4. When installing Protecta® EX Mortar in hollow floor slabs or boards, level the fire seal with the soffit side. Ensure there is sufficient thickness of concrete below the void for the depth of mortar. Where this is not the case, tubular voids should be filled with stone wool normally the same thickness as the depth of the floor slab. Alternatively, simply fire seal on both sides.
5. Install a stone wool shutter board to achieve the required thickness of mortar. Make sure that this achieves a very tight seal – any small openings should be sealed with Protecta® FR Acrylic.
6. Pour clean water into a suitable mixing vessel and add the mortar to obtain the required consistency. Mix steadily at low speed and ensure that any lumps of powder are fully dispersed. Always add the mortar to the water, do not reverse this mixing process
7. Once the desired consistency is achieved pour or trowel the mortar onto the shutter board making sure that it flows into all corners and around services. Apply a firm pressure to the mortar to eliminate any trapped air bubbles. Build up to the required depth.

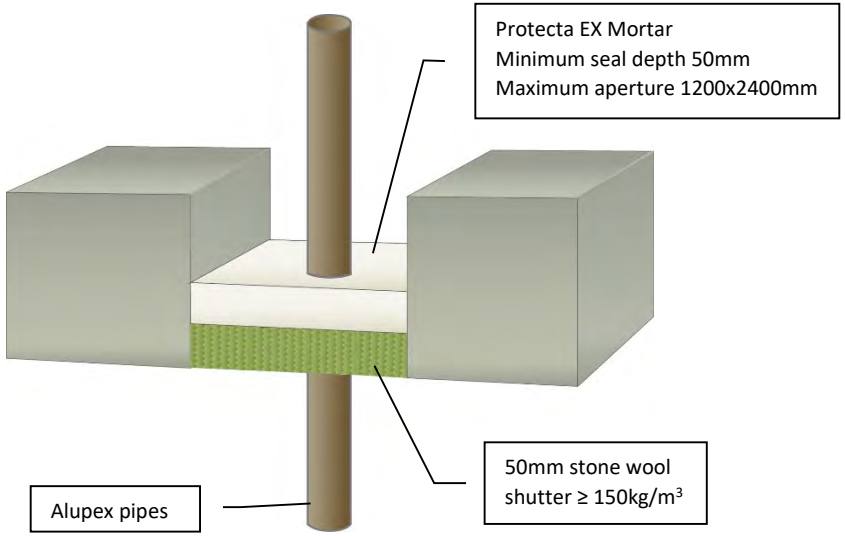

Minimum separations and limitations

An aperture can include several services, and they may also be different. The minimum permitted separation between adjacent seals/apertures is 200mm. Services should be a minimum of 30mm from seal edges. Services within the seal do not require a minimum separation, except pipes where combustible pipe insulation penetrates the seal and plastic pipe penetrations which should be a minimum of 30mm from other services in the aperture. The total amount of cross sections of services (including insulation) should not exceed 60% of the penetration area.

ETA 13/0672 & 18/0855

For all technical details on the products specified please refer to the technical data sheets that can be found on www.protecta.eu

Signed and approved:

Client:

Job Title:

Products	Protecta EX Mortar Stone wool shutter
Application	Fire stopping of un-insulated alupex pipes in rigid floors
Construction	Minimum floor thickness of 150 mm and comprise aerated concrete or concrete with a minimum density of 650kg/m³.

Fire & Sound classification

Alupex pipes ≤ Ø20mm
EI 180 C/C & E 180 C/C

Sound reduction (seal only)
48dB

Polyseam Ltd, 15 St Andrews Road, Huddersfield, West Yorkshire, HD1 6SB
Tel: +44 (0) 148 4421036
Email: post.uk@polyseam.com

Sheet size: **A4**	Drawn date & no: 23/5/18
Scale: **NTS**	Drawn by: K.B

Installation Instructions

1. Ensure the faces of the aperture opening are free of dust and any other contaminants. The faces may be moistened for better adhesion.
2. The seal can be positioned to either side of the construction or anywhere in between.
3. When installing Protecta® EX Mortar in hollow floor slabs or boards, level the fire seal with the soffit side. Ensure there is sufficient thickness of concrete below the void for the depth of mortar. Where this is not the case, tubular voids should be filled with stone wool normally the same thickness as the depth of the floor slab. Alternatively, simply fire seal on both sides.
4. Install a shutter board to achieve the required thickness of mortar. Make sure that this achieves a very tight seal.
5. Pour clean water into a suitable mixing vessel and add the mortar to obtain the required consistency. Mix steadily at low speed and ensure that any lumps of powder are fully dispersed. Always add the mortar to the water, do not reverse this mixing process
6. Once the desired consistency is achieved pour or trowel the mortar onto the shutter board making sure that it flows into all corners and around services. Apply a firm pressure to the mortar to eliminate any trapped air bubbles. Build up to the required depth.

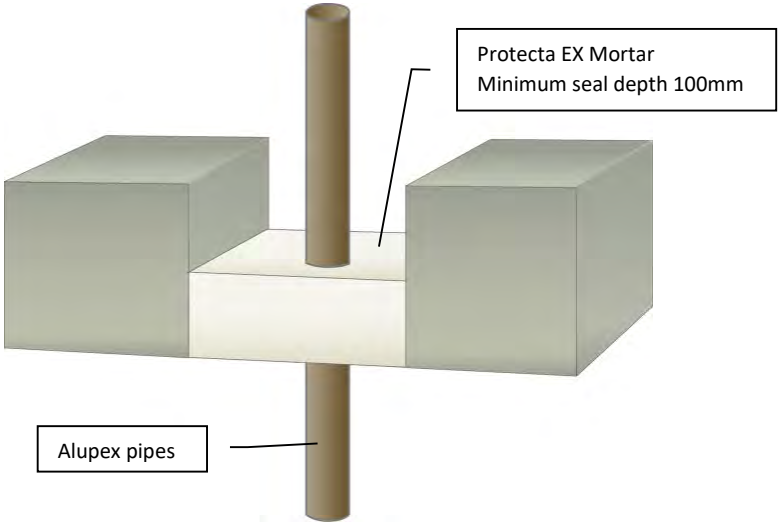

Loadbearing Properties

Soft body impact, serviceability 500Nm. Soft body impact, safety in use 700Nm. Hard body impact serviceability 6Nm. Hard body impact, safety in use 10Nm. Concentrated load to 15kN on size up to 1500mm x1000mm (no failure), 4.85kN on sizes up to 1200mm x 2400mm.

Minimum separations and limitations

An aperture can include several services, and they may also be different. The minimum permitted separation between adjacent seals/apertures is 200mm. Services should be a minimum of 30mm from seal edges. Services within the seal do not require a minimum separation, except pipes where combustible pipe insulation penetrates the seal and plastic pipe penetrations which should be a minimum of 30mm from other services in the aperture. The total amount of cross sections of services (including insulation) should not exceed 60% of the penetration area.

ETA 13/0672 & 18/0855

For all technical details on the products specified please refer to the technical data sheets that can be found on www.protecta.eu

Signed and approved:

Client:

Job Title:

Products	Protecta EX Mortar
Application	Fire stopping of un-insulated alupex pipes in rigid floors
Construction	Minimum floor thickness of 150 mm and comprise aerated concrete or concrete with a minimum density of 650kg/m³.

Fire & Sound classification

Alupex pipes ≤ Ø20mm in maximum apertures 1200 x 2400mm
EI 180 C/C & E 180 C/C

Alupex pipes ≤ Ø75mm in maximum apertures 1200 x 2400mm
EI 20 U/C & E 240 U/C

Sound reduction (seal only)
48dB

Polyseam Ltd, 15 St Andrews Road, Huddersfield, West Yorkshire, HD1 6SB
Tel: +44 (0) 148 4421036
Email: post.uk@polyseam.com

Sheet size: **A4**	Drawn date & no: 23/5/18
Scale: **NTS**	Drawn by: K.B

Installation Instructions

1. Ensure the faces of the aperture opening are free of dust and any other contaminants. The faces may be moistened for better adhesion.
2. The seal can be positioned to either side of the construction or anywhere in between.
3. When installing Protecta® EX Mortar in hollow floor slabs or boards, level the fire seal with the soffit side. Ensure there is sufficient thickness of concrete below the void for the depth of mortar. Where this is not the case, tubular voids should be filled with stone wool normally the same thickness as the depth of the floor slab. Alternatively, simply fire seal on both sides.
4. Install a shutter board to achieve the required thickness of mortar. Make sure that this achieves a very tight seal.
5. Pour clean water into a suitable mixing vessel and add the mortar to obtain the required consistency. Mix steadily at low speed and ensure that any lumps of powder are fully dispersed. Always add the mortar to the water, do not reverse this mixing process
6. Once the desired consistency is achieved pour or trowel the mortar onto the shutter board making sure that it flows into all corners and around services. Apply a firm pressure to the mortar to eliminate any trapped air bubbles. Build up to the required depth.

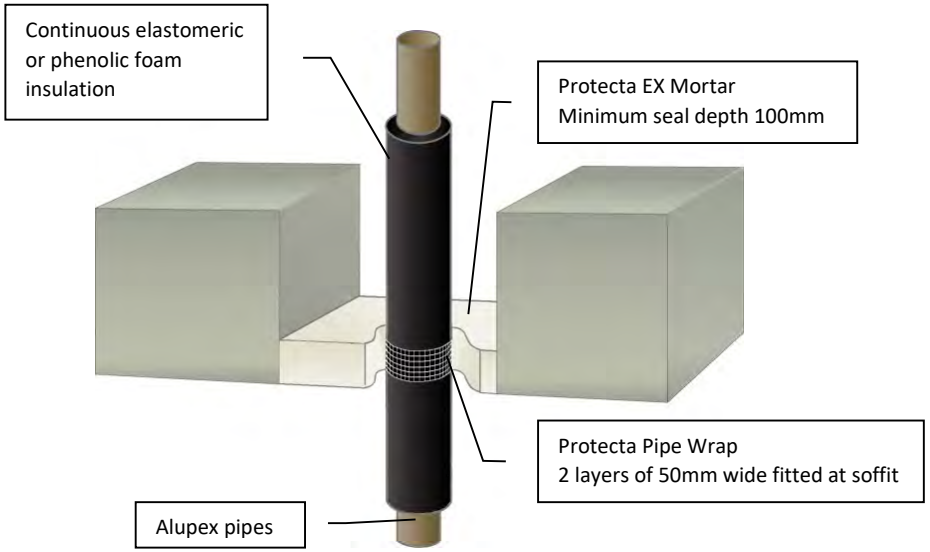

Loadbearing Properties

Soft body impact, serviceability 500Nm. Soft body impact, safety in use 700Nm. Hard body impact serviceability 6Nm. Hard body impact, safety in use 10Nm. Concentrated load to 15kN on size up to 1500mm x1000mm (no failure), 4.85kN on sizes up to 1200mm x 2400mm.

Minimum separations and limitations

An aperture can include several services, and they may also be different. The minimum permitted separation between adjacent seals/apertures is 200mm. Services should be a minimum of 30mm from seal edges. Services within the seal do not require a minimum separation, except pipes where combustible pipe insulation penetrates the seal and plastic pipe penetrations which should be a minimum of 30mm from other services in the aperture. The total amount of cross sections of services (including insulation) should not exceed 60% of the penetration area.

ETA 13/0672 & 18/0855

Client:

Job Title:

Products	Protecta EX Mortar Protecta FR Pipe Wrap 25m
Application	Fire stopping of insulated alupex pipes in rigid floors
Construction	Minimum floor thickness of 150 mm and comprise aerated concrete or concrete with a minimum density of 650kg/m³

Fire & Sound classification

Alupex pipes ≤ Ø16mm with 9mm foam insulation in maximum apertures
1200 x 2400mm EI 240 C/C & E 240 C/C

Alupex pipes ≤ Ø75mm with 13 - 25mm foam insulation in maximum apertures
1200 x 2400mm EI 90 C/C & E 180 C/C

Alupex pipes ≤ Ø75mm with 9 - 13mm foam insulation in maximum apertures
1200 x 2400mm EI 90 C/C & E 240 C/C

Sound reduction (seal only) 48dB

Polyseam Ltd, 15 St Andrews Road, Huddersfield, West Yorkshire, HD1 6SB
Tel: +44 (0) 148 4421036
Email: post.uk@polyseam.com

For all technical details on the products specified please refer to the technical data sheets that can be found on www.protecta.eu

Signed and approved:

Sheet size: **A4**	Drawn date & no: 4/3/19
Scale: **NTS**	Drawn by: K.B

Installation Instructions

1. Ensure the faces of the aperture opening are free of dust and any other contaminants. The faces may be moistened for better adhesion.
2. The seal can be positioned to either side of the construction or anywhere in between.
3. When installing Protecta® EX Mortar in hollow floor slabs or boards, level the fire seal with the soffit side. Ensure there is sufficient thickness of concrete below the void for the depth of mortar. Where this is not the case, tubular voids should be filled with stone wool normally the same thickness as the depth of the floor slab. Alternatively, simply fire seal on both sides.
4. Install a stone wool shutter board to achieve the required thickness of mortar. Make sure that this achieves a very tight seal – any small openings should be sealed with Protecta® FR Acrylic
5. Pour clean water into a suitable mixing vessel and add the mortar to obtain the required consistency. Mix steadily at low speed and ensure that any lumps of powder are fully dispersed. Always add the mortar to the water, do not reverse this mixing process
6. Once the desired consistency is achieved pour or trowel the mortar onto the shutter board making sure that it flows into all corners and around services. Apply a firm pressure to the mortar to eliminate any trapped air bubbles. Build up to the required depth.

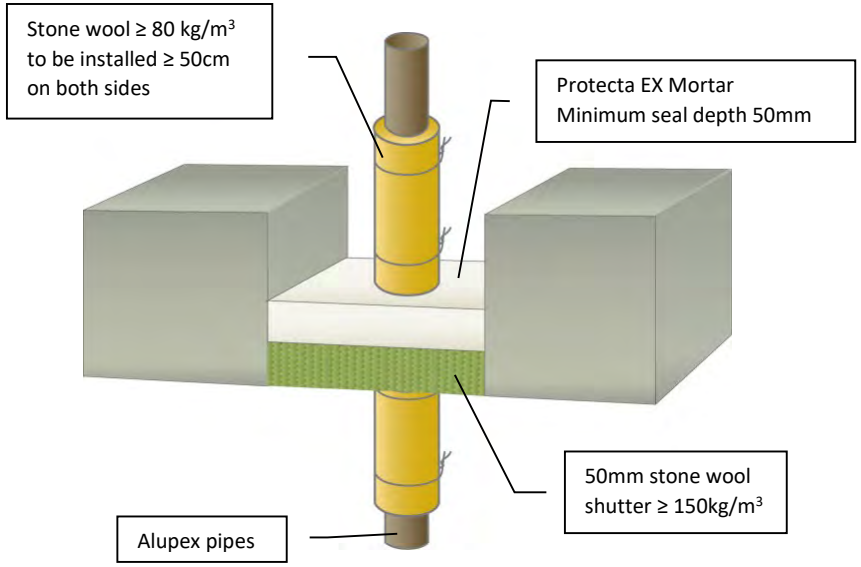

Minimum separations and limitations

An aperture can include several services, and they may also be different. The minimum permitted separation between adjacent seals/apertures is 200mm. Services should be a minimum of 30mm from seal edges. Services within the seal do not require a minimum separation, except pipes where combustible pipe insulation penetrates the seal and plastic pipe penetrations which should be a minimum of 30mm from other services in the aperture. The total amount of cross sections of services (including insulation) should not exceed 60% of the penetration area.

ETA 13/0672 & 18/0855

For all technical details on the products specified please refer to the technical data sheets that can be found on www.protecta.eu

Signed and approved:

Client:

Job Title:

Products	Protecta EX Mortar Stone wool shutter
Application	Fire stopping of insulated alupex pipes in rigid floors
Construction	Minimum floor thickness of 150 mm and comprise aerated concrete or concrete with a minimum density of 650kg/m³.

Fire & Sound classification

Alupex pipes ≤ Ø16mm with ≥ 20mm stone wool insulation in maximum apertures
135 x 135mm EI 240 C/C & E 240 C/C

Alupex pipes ≤ Ø75mm with ≥ 20mm stone wool insulation in maximum apertures
1200 x 2400mm EI 180 C/C & E 180 C/C

Alupex pipes ≤ Ø75mm with ≥ 20mm stone wool insulation in maximum apertures
135 x 135mm EI 180 C/C & E 240 C/C

Sound reduction (seal only) 48dB

Polyseam Ltd, 15 St Andrews Road, Huddersfield, West Yorkshire, HD1 6SB
Tel: +44 (0) 148 4421036
Email: post.uk@polyseam.com

Sheet size: **A4**	Drawn date & no: 20/8/15
Scale: **NTS**	Drawn by: K.B

Installation Instructions

1. Ensure the faces of the aperture opening are free of dust and any other contaminants. The faces may be moistened for better adhesion.
2. The seal can be positioned to either side of the construction or anywhere in between.
3. When installing Protecta® EX Mortar in hollow floor slabs or boards, level the fire seal with the soffit side. Ensure there is sufficient thickness of concrete below the void for the depth of mortar. Where this is not the case, tubular voids should be filled with stone wool normally the same thickness as the depth of the floor slab. Alternatively, simply fire seal on both sides.
4. Install a shutter board to achieve the required thickness of mortar. Make sure that this achieves a very tight seal.
5. Pour clean water into a suitable mixing vessel and add the mortar to obtain the required consistency. Mix steadily at low speed and ensure that any lumps of powder are fully dispersed. Always add the mortar to the water, do not reverse this mixing process
6. Once the desired consistency is achieved pour or trowel the mortar onto the shutter board making sure that it flows into all corners and around services. Apply a firm pressure to the mortar to eliminate any trapped air bubbles. Build up to the required depth.

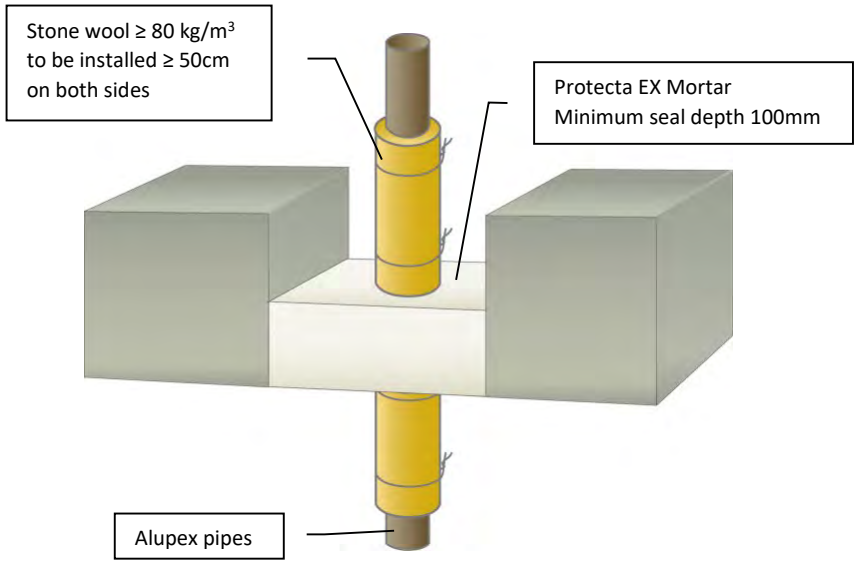

Loadbearing Properties

Soft body impact, serviceability 500Nm. Soft body impact, safety in use 700Nm. Hard body impact serviceability 6Nm. Hard body impact, safety in use 10Nm. Concentrated load to 15kN on size up to 1500mm x1000mm (no failure), 4.85kN on sizes up to 1200mm x 2400mm.

Minimum separations and limitations

An aperture can include several services, and they may also be different. The minimum permitted separation between adjacent seals/apertures is 200mm. Services should be a minimum of 30mm from seal edges. Services within the seal do not require a minimum separation, except pipes where combustible pipe insulation penetrates the seal and plastic pipe penetrations which should be a minimum of 30mm from other services in the aperture. The total amount of cross sections of services (including insulation) should not exceed 60% of the penetration area.

ETA 13/0672 & 18/0855

Client:

Job Title:

Products	Protecta EX Mortar
Application	Fire stopping of insulated alupex pipes in rigid floors
Construction	Minimum floor thickness of 150 mm and comprise aerated concrete or concrete with a minimum density of 650kg/m³.

Fire & Sound classification

Alupex pipes ≤ Ø16mm with ≥ 20mm stone wool insulation in maximum apertures
1200 x 2400mm EI 240 C/C & E 240 C/C

Alupex pipes ≤ Ø75mm with ≥ 20mm stone wool insulation in maximum apertures
1200 x 2400mm EI 180 C/C & E 240 C/C

Sound reduction (seal only) 48dB

Polyseam Ltd, 15 St Andrews Road, Huddersfield, West Yorkshire, HD1 6SB
Tel: +44 (0) 148 4421036
Email: post.uk@polyseam.com

For all technical details on the products specified please refer to the technical data sheets that can be found on www.protecta.eu

Signed and approved:

Sheet size: **A4**	Drawn date & no: 23/5/18
Scale: **NTS**	Drawn by: K.B

Installation Instructions

1. Ensure the faces of the aperture opening are free of dust and any other contaminants. The faces may be moistened for better adhesion.
2. The seal can be positioned to either side of the construction or anywhere in between.
3. When installing Protecta® EX Mortar in hollow floor slabs or boards, level the fire seal with the soffit side. Ensure there is sufficient thickness of concrete below the void for the depth of mortar. Where this is not the case, tubular voids should be filled with stone wool normally the same thickness as the depth of the floor slab. Alternatively, simply fire seal on both sides.
4. Install a stone wool shutter board to achieve the required thickness of mortar. Make sure that this achieves a very tight seal – any small openings should be sealed with Protecta® FR Acrylic
5. Pour clean water into a suitable mixing vessel and add the mortar to obtain the required consistency. Mix steadily at low speed and ensure that any lumps of powder are fully dispersed. Always add the mortar to the water, do not reverse this mixing process
6. Once the desired consistency is achieved pour or trowel the mortar onto the shutter board making sure that it flows into all corners and around services. Apply a firm pressure to the mortar to eliminate any trapped air bubbles. Build up to the required depth.

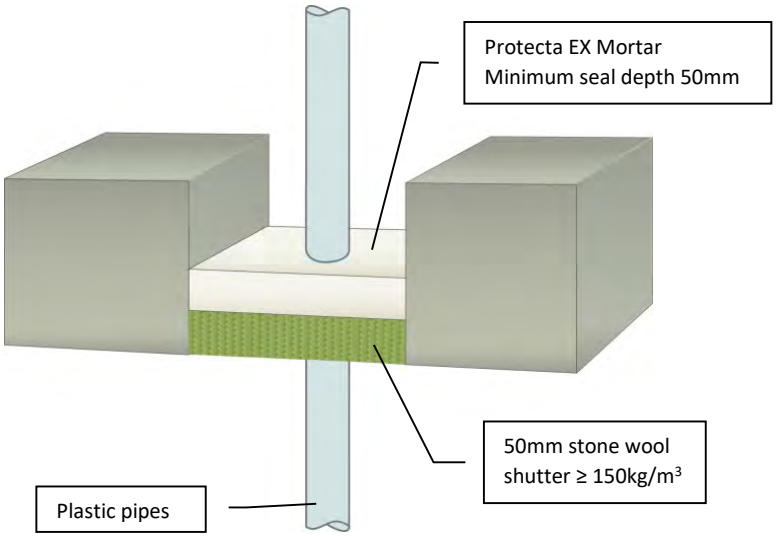

Minimum separations and limitations

An aperture can include several services, and they may also be different. The minimum permitted separation between adjacent seals/apertures is 200mm. Services should be a minimum of 30mm from seal edges. Services within the seal do not require a minimum separation, except pipes where combustible pipe insulation penetrates the seal and plastic pipe penetrations which should be a minimum of 30mm from other services in the aperture. The total amount of cross sections of services (including insulation) should not exceed 60% of the penetration area.

ETA 13/0672 & 18/0855

For all technical details on the products specified please refer to the technical data sheets that can be found on www.protecta.eu

Signed and approved:

Client:

Job Title:

Products	Protecta EX Mortar Stone wool shutter
Application	Fire stopping of plastic pipes in rigid floors
Construction	Minimum floor thickness of 150 mm and comprise aerated concrete or concrete with a minimum density of 650kg/m³.

Fire & Sound classification

PVC-U & PVC-C plastic pipes ≤ Ø40mm in maximum apertures 1200 x 2400mm
EI 120 U/C & E 120 U/C

PEX pipe-in-pipes ≤ Ø25mm in maximum apertures 1200 x 2400mm
EI 180 C/C & E 180 C/C

PEX pipe-in-pipes ≤ Ø25mm in maximum apertures 550 x 1100mm
EI 240 C/C & E 240 C/C

Sound reduction (seal only)
48dB

Polyseam Ltd, 15 St Andrews Road, Huddersfield, West Yorkshire, HD1 6SB
Tel: +44 (0) 148 4421036
Email: post.uk@polyseam.com

Sheet size: **A4**	Drawn date & no: 23/5/18
Scale: **NTS**	Drawn by: K.B

Installation Instructions

1. Ensure the faces of the aperture opening are free of dust and any other contaminants. The faces may be moistened for better adhesion.
2. The seal can be positioned to either side of the construction or anywhere in between.
3. When installing Protecta® EX Mortar in hollow floor slabs or boards, level the fire seal with the soffit side. Ensure there is sufficient thickness of concrete below the void for the depth of mortar. Where this is not the case, tubular voids should be filled with stone wool normally the same thickness as the depth of the floor slab. Alternatively, simply fire seal on both sides.
4. Install a shutter board to achieve the required thickness of mortar. Make sure that this achieves a very tight seal.
5. Pour clean water into a suitable mixing vessel and add the mortar to obtain the required consistency. Mix steadily at low speed and ensure that any lumps of powder are fully dispersed. Always add the mortar to the water, do not reverse this mixing process
6. Once the desired consistency is achieved pour or trowel the mortar onto the shutter board making sure that it flows into all corners and around services. Apply a firm pressure to the mortar to eliminate any trapped air bubbles. Build up to the required depth.

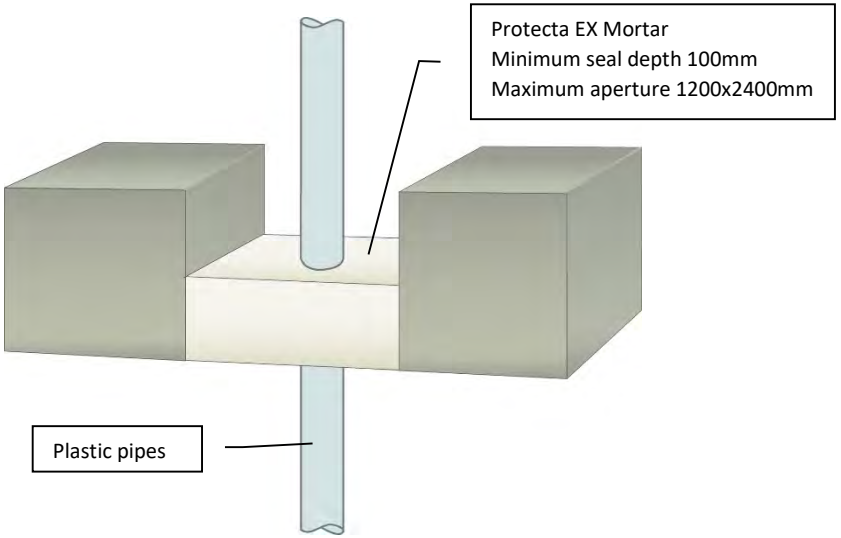

Loadbearing Properties

Soft body impact, serviceability 500Nm. Soft body impact, safety in use 700Nm. Hard body impact serviceability 6Nm. Hard body impact, safety in use 10Nm. Concentrated load to 15kN on size up to 1500mm x1000mm (no failure), 4.85kN on sizes up to 1200mm x 2400mm.

Minimum separations and limitations

An aperture can include several services, and they may also be different. The minimum permitted separation between adjacent seals/apertures is 200mm. Services should be a minimum of 30mm from seal edges. Services within the seal do not require a minimum separation, except pipes where combustible pipe insulation penetrates the seal and plastic pipe penetrations which should be a minimum of 30mm from other services in the aperture. The total amount of cross sections of services (including insulation) should not exceed 60% of the penetration area.

ETA 13/0672 & 18/0855

As a part of our policy of on-going product development and testing, we reserve the right to modify, alter or change product specifications without giving notice. All information contained in this document is given in good faith and is provided for guidance only. Any drawings provided are for illustrative purposes only. As Polyseam has no control over the methods or competence of installation and of prevailing site conditions, no warranties, expressed or implied, is intended to be given as to the actual performance of the product mentioned or referred to herein and no liability whatsoever will be accepted for any loss, damage or injury arising from the use of the information given.

For all technical details on the products specified please refer to the technical data sheets that can be found on www.protecta.eu

Signed and approved:

Client:

Job Title:

Products	Protecta EX Mortar
Application	Fire stopping of plastic pipes in rigid floors
Construction	Minimum floor thickness of 150 mm and comprise aerated concrete or concrete with a minimum density of 650kg/m³.

Fire & Sound classification

PE, ABS, SAN+PVC & PP plastic pipes ≤ Ø40mm
EI 120 U/C & E 120 U/C

PVC-U & PVC-C plastic pipes ≤ Ø40mm
EI 120 U/C & E 120 U/C

PEX pipe-in-pipes ≤ Ø25mm
EI 240 C/C & E 240 C/C

Sound reduction (seal only)
48dB

Polyseam Ltd, 15 St Andrews Road, Huddersfield, West Yorkshire, HD1 6SB
Tel: +44 (0) 148 4421036
Email: post.uk@polyseam.com

Sheet size: **A4**	Drawn date & no: 23/5/18
Scale: **NTS**	Drawn by: K.B

Installation Instructions

1. Ensure the faces of the aperture opening are free of dust and any other contaminants. The faces may be moistened for better adhesion.
2. The seal can be positioned to either side of the construction or anywhere in between.
3. When installing Protecta® EX Mortar in hollow floor slabs or boards, level the fire seal with the soffit side. Ensure there is sufficient thickness of concrete below the void for the depth of mortar. Where this is not the case, tubular voids should be filled with stone wool normally the same thickness as the depth of the floor slab. Alternatively, simply fire seal on both sides.
4. Install a shutter board to achieve the required thickness of mortar. Make sure that this achieves a very tight seal.
5. Pour clean water into a suitable mixing vessel and add the mortar to obtain the required consistency. Mix steadily at low speed and ensure that any lumps of powder are fully dispersed. Always add the mortar to the water, do not reverse this mixing process
6. Once the desired consistency is achieved pour or trowel the mortar onto the shutter board making sure that it flows into all corners and around services. Apply a firm pressure to the mortar to eliminate any trapped air bubbles. Build up to the required depth.

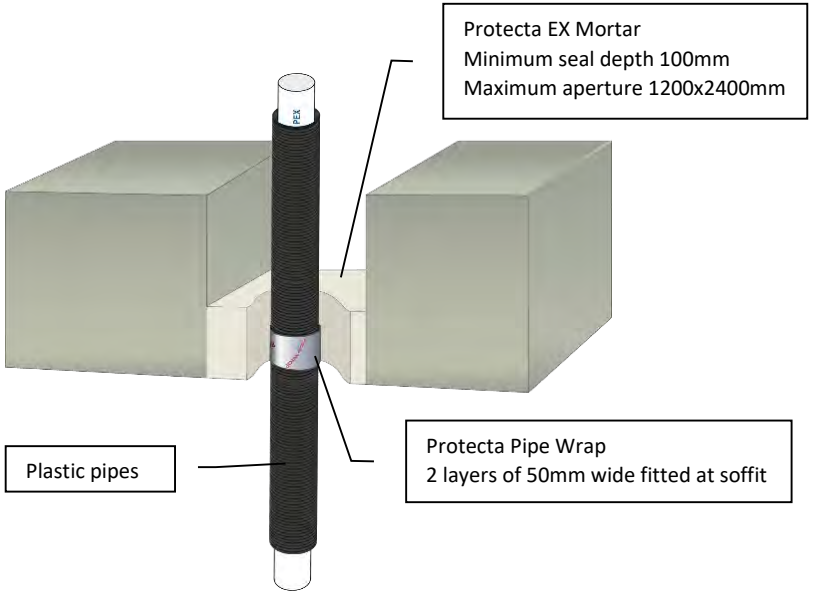

Loadbearing Properties

Soft body impact, serviceability 500Nm. Soft body impact, safety in use 700Nm. Hard body impact serviceability 6Nm. Hard body impact, safety in use 10Nm. Concentrated load to 15kN on size up to 1500mm x1000mm (no failure), 4.85kN on sizes up to 1200mm x 2400mm.

Minimum separations and limitations

An aperture can include several services, and they may also be different. The minimum permitted separation between adjacent seals/apertures is 200mm. Services should be a minimum of 30mm from seal edges. Services within the seal do not require a minimum separation, except pipes where combustible pipe insulation penetrates the seal and plastic pipe penetrations which should be a minimum of 30mm from other services in the aperture. The total amount of cross sections of services (including insulation) should not exceed 60% of the penetration area.

ETA 13/0672 & 18/0855

For all technical details on the products specified please refer to the technical data sheets that can be found on www.protecta.eu

Signed and approved:

Client:

Job Title:

Products	Protecta EX Mortar Protecta FR Pipe Wrap 25m
Application	Fire stopping of plastic pipes in rigid floors
Construction	Minimum floor thickness of 150 mm and comprise aerated concrete or concrete with a minimum density of 650kg/m³.

Fire & Sound classification

PEX pipe-in-pipes ≤ Ø54mm
EI 120 C/C & E 120 C/C

Sound reduction (seal only)
48dB

Polyseam Ltd, 15 St Andrews Road, Huddersfield, West Yorkshire, HD1 6SB
Tel: +44 (0) 148 4421036
Email: post.uk@polyseam.com

Sheet size: **A4**	Drawn date & no: 4/3/19
Scale: **NTS**	Drawn by: K.B

Installation Instructions

1. Ensure the faces of the aperture opening are free of dust and any other contaminants. The faces may be moistened for better adhesion.
2. The seal can be positioned to either side of the construction or anywhere in between.
3. When installing Protecta® EX Mortar in hollow floor slabs or boards, level the fire seal with the soffit side. Ensure there is sufficient thickness of concrete below the void for the depth of mortar. Where this is not the case, tubular voids should be filled with stone wool normally the same thickness as the depth of the floor slab. Alternatively, simply fire seal on both sides.
4. Install a shutter board to achieve the required thickness of mortar. Make sure that this achieves a very tight seal.
5. Pour clean water into a suitable mixing vessel and add the mortar to obtain the required consistency. Mix steadily at low speed and ensure that any lumps of powder are fully dispersed. Always add the mortar to the water, do not reverse this mixing process
6. Once the desired consistency is achieved pour or trowel the mortar onto the shutter board making sure that it flows into all corners and around services. Apply a firm pressure to the mortar to eliminate any trapped air bubbles. Build up to the required depth.

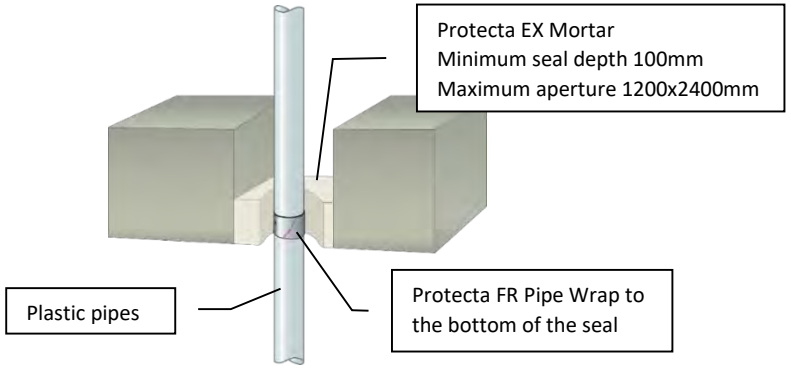

Services	Pipe Wall Thickness	Pipe Wrap	Classification
≤ Ø40mm PVC-U & PVC-C	1.8 – 3.7mm	50 x 1.8mm (1 layer)	EI 120 U/U (E 180 U/U)
≤ Ø40mm PE, ABS & SAN+PVC	2.4 – 3.7mm	50 x 1.8mm (1 layer)	EI 240 U/U (E 240 U/U)
≤ Ø40mm PP	1.8 – 5.5mm	50 x 1.8mm (1 layer)	EI 120 U/U (E 120 U/U)
≤ Ø110mm PVC-U & PVC-C	1.9 – 6.6mm	50 x 3.6mm (2 layers)	EI 240 U/C (E 240 U/C)
≤ Ø110mm PE, ABS & SAN+PVC	2.5 – 10.0mm	50 x 3.6mm (2 layers)	EI 120 U/C (E 120 U/C)
≤ Ø110mm PP	1.9 – 6.3mm	50 x 3.6mm (2 layers)	EI 240 U/C (E 240 U/C)
≤ Ø125mm PVC-U & PVC-C	3.5 – 7.4mm	50 x 7.2mm (4 layers)	EI 120 U/C (E 120 U/C)
≤ Ø125mm PE, ABS & SAN+PVC	3.9 – 11.4mm	50 x 7.2mm (4 layers)	EI 240 U/C (E 240 U/C)
≤ Ø125mm PP	3.4 – 11.4mm	50 x 7.2mm (4 layers)	EI 240 U/C (E 240 U/C)
≤ Ø160mm PVC-U & PVC-C	4.5 – 9.5mm	50 x 10.8mm (6 layers)	EI 90 C/C (E 90 C/C)
≤ Ø160mm PVC-U & PVC-C	4.5mm	50 x 10.8mm (6 layers)	EI 240 C/C (E 240 C/C)
≤ Ø160mm PVC-U & PVC-C	9.5mm	50 x 10.8mm (6 layers)	EI 90 U/C (E 90 U/C)
≤ Ø160mm PE, ABS & SAN+PVC	4.9 – 14.6mm	50 x 10.8mm (6 layers)	EI 120 U/C (E 120 U/C)
≤ Ø160mm PP	4.9 – 14.6mm	50 x 10.8mm (6 layers)	EI 240 U/C (E 240 U/C)
≤ Ø250mm PE, ABS & SAN+PVC	7.8mm	75 x 12.6mm (7 layers)	EI 180 C/C (E 180 C/C)

Loadbearing Properties

Soft body impact, serviceability 500Nm. Soft body impact, safety in use 700Nm. Hard body impact serviceability 6Nm. Hard body impact, safety in use 10Nm. Concentrated load to 15kN on size up to 1500mm x1000mm (no failure), 4.85kN on sizes up to 1200mm x 2400mm.

Minimum separations and limitations

An aperture can include several services, and they may also be different. The minimum permitted separation between adjacent seals/apertures is 200mm. Services should be a minimum of 30mm from seal edges. Services within the seal do not require a minimum separation, except pipes where combustible pipe insulation penetrates the seal and plastic pipe penetrations which should be a minimum of 30mm from other services in the aperture. The total amount of cross sections of services (including insulation) should not exceed 60% of the penetration area.

ETA 13/0672 & 18/0855

Client:

Job Title:

Products Protecta EX Mortar
Protecta FR Pipe Wrap 25m

Application Fire stopping of plastic pipes in rigid floors

Construction Minimum floor thickness of 150 mm and comprise aerated concrete or concrete with a minimum density of 650kg/m^3

Fire & Sound classification

Fire classifications in table on the left.

Sound reduction (seal only) 48dB

Polyseam Ltd, 15 St Andrews Road, Huddersfield, West Yorkshire, HD1 6SB
Tel: +44 (0) 148 4421036
Email: post.uk@polyseam.com

For all technical details on the products specified please refer to the technical data sheets that can be found on www.protecta.eu

Signed and approved:

Sheet size:	Drawn date & no:
A4	4/3/19
Scale:	Drawn by:
NTS	K.B

Installation Instructions

1. Ensure the faces of the aperture opening are free of dust and any other contaminants. The faces may be moistened for better adhesion.
2. The seal can be positioned to either side of the construction or anywhere in between.
3. When installing Protecta® EX Mortar in hollow floor slabs or boards, level the fire seal with the soffit side. Ensure there is sufficient thickness of concrete below the void for the depth of mortar. Where this is not the case, tubular voids should be filled with stone wool normally the same thickness as the depth of the floor slab. Alternatively, simply fire seal on both sides.
4. Install a shutter board to achieve the required thickness of mortar. Make sure that this achieves a very tight seal.
5. Pour clean water into a suitable mixing vessel and add the mortar to obtain the required consistency. Mix steadily at low speed and ensure that any lumps of powder are fully dispersed. Always add the mortar to the water, do not reverse this mixing process
6. Once the desired consistency is achieved pour or trowel the mortar onto the shutter board making sure that it flows into all corners and around services. Apply a firm pressure to the mortar to eliminate any trapped air bubbles. Build up to the required depth.

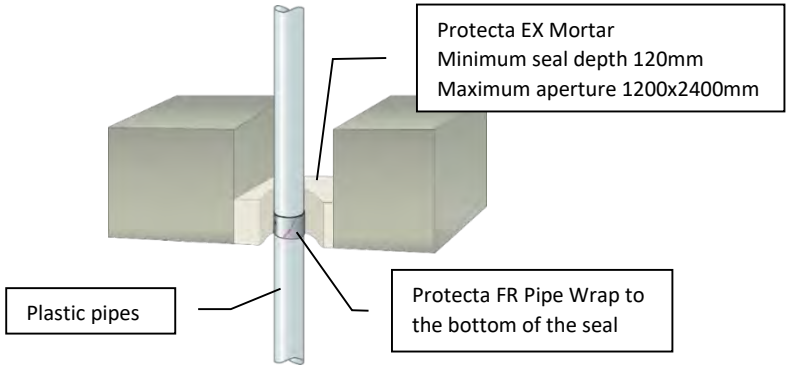

Services	Pipe Wall Thickness	Pipe Wrap	Classification
Ø160mm PVC-U & PVC-C	4.5 – 9.5mm	50 x 10.8mm (6 layers)	EI 120 U/C (E 120 U/C)
≤ Ø200mm PP	4.9 – 18.2mm	75 x 10.8mm (6 layers)	EI 240 C/C (E 240 C/C)
≤ Ø315mm PVC-U & PVC-C	4.5 – 12.1mm	75 x 18.0mm (10 layers)	EI 90 C/C (E 90 C/C)
Ø315mm PVC-U & PVC-C	7.7mm	75 x 18.0mm (10 layers)	EI 120 C/C (E 120 C/C)

Loadbearing Properties
Soft body impact, serviceability 500Nm. Soft body impact, safety in use 700Nm. Hard body impact serviceability 6Nm. Hard body impact, safety in use 10Nm. Concentrated load to 15kN on size up to 1500mm x1000mm (no failure), 4.85kN on sizes up to 1200mm x 2400mm.

Minimum separations and limitations
An aperture can include several services, and they may also be different. The minimum permitted separation between adjacent seals/apertures is 200mm. Services should be a minimum of 30mm from seal edges. Services within the seal do not require a minimum separation, except pipes where combustible pipe insulation penetrates the seal and plastic pipe penetrations which should be a minimum of 30mm from other services in the aperture. The total amount of cross sections of services (including insulation) should not exceed 60% of the penetration area.

ETA 13/0672 & 18/0855

For all technical details on the products specified please refer to the technical data sheets that can be found on www.protecta.eu

Signed and approved:

Client:

Job Title:

Products Protecta EX Mortar
Protecta FR Pipe Wrap 25m

Application Fire stopping of plastic pipes in rigid floors

Construction Minimum floor thickness of 150 mm and comprise aerated concrete or concrete with a minimum density of 650kg/m^3

Fire & Sound classification

Fire classifications in table on the left.

Sound reduction (seal only) 48dB

Protecta®

Polyseam Ltd, 15 St Andrews Road, Huddersfield, West Yorkshire, HD1 6SB
Tel: +44 (0) 148 4421036
Email: post.uk@polyseam.com

Sheet size:	Drawn date & no:
A4	4/3/19
Scale:	Drawn by:
NTS	K.B

Installation Instructions

1. Ensure the faces of the aperture opening are free of dust and any other contaminants. The faces may be moistened for better adhesion.
2. The seal can be positioned to either side of the construction or anywhere in between.
3. When installing Protecta® EX Mortar in hollow floor slabs or boards, level the fire seal with the soffit side. Ensure there is sufficient thickness of concrete below the void for the depth of mortar. Where this is not the case, tubular voids should be filled with stone wool normally the same thickness as the depth of the floor slab. Alternatively, simply fire seal on both sides.
4. Install a shutter board to achieve the required thickness of mortar. Make sure that this achieves a very tight seal.
5. Pour clean water into a suitable mixing vessel and add the mortar to obtain the required consistency. Mix steadily at low speed and ensure that any lumps of powder are fully dispersed. Always add the mortar to the water, do not reverse this mixing process
6. Once the desired consistency is achieved pour or trowel the mortar onto the shutter board making sure that it flows into all corners and around services. Apply a firm pressure to the mortar to eliminate any trapped air bubbles. Build up to the required depth.

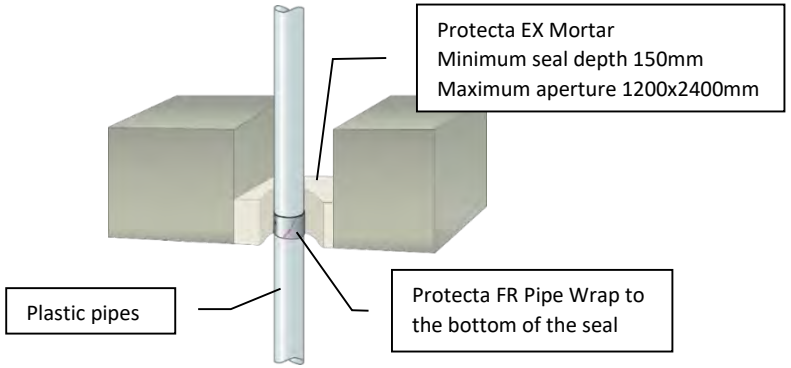

Services	Pipe Wall Thickness	Pipe Wrap	Classification
≤ Ø40mm PVC-U & PVC-C	1.8 – 3.7mm	50 x 1.8mm (1 layer)	EI 120 U/U (E 180 U/U)
≤ Ø40mm PE, ABS & SAN+PVC	2.4 – 3.7mm	50 x 1.8mm (1 layer)	EI 240 U/U (E 240 U/U)
≤ Ø40mm PP	1.8 – 5.5mm	50 x 1.8mm (1 layer)	EI 120 U/U (E 120 U/U)
≤ Ø110mm PVC-U & PVC-C	1.9 – 6.8mm	50 x 7.2mm (4 layers)	EI 60 U/U (E 60 U/U)
≤ Ø110mm PE, ABS & SAN+PVC	3.4 – 10.0mm	75 x 5.4mm (3 layers)	EI 240 U/U (E 240 U/U)
≤ Ø110mm PP	3.7 – 10.5mm	50 x 7.2mm (4 layers)	EI 240 U/U (E 240 U/U)
≤ Ø125mm PVC-U & PVC-C	1.9 – 7.4mm	50 x 7.2mm (4 layers)	EI 60 U/U (E 60 U/U)
Ø125mm PVC-U & PVC-C	7.4mm	50 x 7.2mm (4 layers)	EI 120 U/U (E 120 U/U)
Ø125mm PE, ABS & SAN+PVC	11.4mm	50 x 7.2mm (4 layers)	EI 240 U/U (E 240 U/U)
Ø125mm PP	11.4mm	50 x 7.2mm (4 layers)	EI 240 U/U (E 240 U/U)
Ø140mm PVC-U & PVC-C	6.5 – 8.3mm	75 x 10.8mm (6 layers)	EI 30 U/U (E 120 U/U)
Ø140mm PE, ABS & SAN+PVC	8.0 – 12.4mm	75 x 10.8mm (6 layers)	EI 120 U/U (E 240 U/U)
Ø140mm PP	12.8mm	75 x 7.2mm (4 layers)	EI 240 U/U (E 240 U/U)
Ø160mm PVC-U & PVC-C	9.5mm	75 x 7.2mm (4 layers)	EI 30 U/U (E 120 U/U)
≤ Ø160mm PE, ABS & SAN+PVC	4.9 – 14.6mm	75 x 7.2mm (4 layers)	EI 120 U/U (E 120 U/U)
≤ Ø160mm PE, ABS & SAN+PVC	3.9 – 14.6mm	75 x 18.0mm (10 layers)	EI 120 U/U (E 240 U/U)
Ø160mm PP	14.6mm	75 x 7.2mm (4 layers)	EI 240 U/U (E 240 U/U)
≤ Ø315mm PE, ABS & SAN+PVC	4.9 – 18.7mm	75 x 18.0mm (10 layers)	EI 60 C/C (E 60 C/C)
≤ Ø315mm PP	4.9 – 28.6mm	75 x 18.0mm (10 layers)	EI 60 C/C (E 60 C/C)
Ø315mm PP	7.7mm	75 x 18.0mm (10 layers)	EI 180 C/C (E 180 C/C)

Minimum separations and limitations

An aperture can include several services, and they may also be different. The minimum permitted separation between adjacent seals/apertures is 200mm. Services should be a minimum of 30mm from seal edges. Services within the seal do not require a minimum separation, except pipes where combustible pipe insulation penetrates the seal and plastic pipe penetrations which should be a minimum of 30mm from other services in the aperture. The total amount of cross sections of services (including insulation) should not exceed 60% of the penetration area.

ETA 13/0672 & 18/0855

For all technical details on the products specified please refer to the technical data sheets that can be found on www.protecta.eu

Signed and approved:

Client:

Job Title:

Products Protecta EX Mortar
Protecta FR Pipe Wrap 25m

Application Fire stopping of plastic pipes in rigid floors

Construction Minimum floor thickness of 150 mm and comprise aerated concrete or concrete with a minimum density of 650kg/m^3

Fire & Sound classification

Fire classifications in table on the left.

Sound reduction (seal only) 48dB

Polyseam Ltd, 15 St Andrews Road, Huddersfield, West Yorkshire, HD1 6SB
Tel: +44 (0) 148 4421036
Email: post.uk@polyseam.com

Sheet size:	Drawn date & no:
A4	4/3/19
Scale:	Drawn by:
NTS	K.B

Installation Instructions

1. Ensure the faces of the aperture opening are free of dust and any other contaminants. The faces may be moistened for better adhesion.
2. The seal can be positioned to either side of the construction or anywhere in between.
3. When installing Protecta® EX Mortar in hollow floor slabs or boards, level the fire seal with the soffit side. Ensure there is sufficient thickness of concrete below the void for the depth of mortar. Where this is not the case, tubular voids should be filled with stone wool normally the same thickness as the depth of the floor slab. Alternatively, simply fire seal on both sides.
4. Install a shutter board to achieve the required thickness of mortar. Make sure that this achieves a very tight seal.
5. Pour clean water into a suitable mixing vessel and add the mortar to obtain the required consistency. Mix steadily at low speed and ensure that any lumps of powder are fully dispersed. Always add the mortar to the water, do not reverse this mixing process
6. Once the desired consistency is achieved pour or trowel the mortar onto the shutter board making sure that it flows into all corners and around services. Apply a firm pressure to the mortar to eliminate any trapped air bubbles. Build up to the required depth.

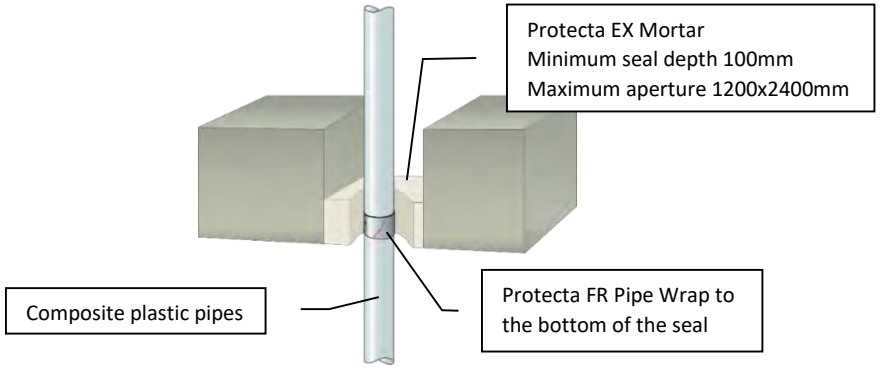

Services	Pipe Wrap	Classification
Ø 32mm Aquatherm Green SDR9 pipes	50 x 1.8mm (1 layer)	EI 240 C/C (E 240 C/C)
≤ Ø 110mm Aquatherm Green SDR9 pipes	50 x 3.6mm (2 layers)	EI 240 C/C (E 240 C/C)
≤ Ø 50mm Geberit Silent-PP pipes	50 x 3.6mm (2 layers)	EI 120 U/U (E 120 U/U)
≤ Ø 110mm Geberit Silent-PP pipes	50 x 3.6mm (2 layers)	EI 120 U/C (E 120 U/C)
≤ Ø 110mm Polo-Kal NG pipes	50 x 3.6mm (2 layers)	EI 180 U/C (E 180 U/C)
Ø 125mm Polo-Kal NG pipes	50 x 7.2mm (4 layers)	EI 240 U/C (E 240 U/C)
Ø 160mm Polo-Kal NG pipes	50 x 10.8mm (6 layers)	EI 240 U/C (E 240 U/C)
≤ Ø 50mm Rehau Raupiano Plus pipes	50 x 3.6mm (2 layers)	EI 120 U/U (E 120 U/U)
≤ Ø 110mm Rehau Raupiano Plus pipes	50 x 3.6mm (2 layers)	EI 120 U/C (E 120 U/C)
Ø 125mm Rehau Raupiano Plus pipes	50 x 7.2mm (4 layers)	EI 120 U/C (E 240 U/C)
Ø 160mm Rehau Raupiano Plus pipes	50 x 10.8mm (6 layers)	EI 120 U/C (E 120 U/C)
≤ Ø 50mm Wavin SiTech pipes	50 x 3.6mm (2 layers)	EI 120 U/U (E 120 U/U)
≤ Ø 110mm Wavin SiTech pipes	50 x 3.6mm (2 layers)	EI 120 U/C (E 120 U/C)

Loadbearing Properties

Soft body impact, serviceability 500Nm. Soft body impact, safety in use 700Nm. Hard body impact serviceability 6Nm. Hard body impact, safety in use 10Nm. Concentrated load to 15kN on size up to 1500mm x1000mm (no failure), 4.85kN on sizes up to 1200mm x 2400mm.

Minimum separations and limitations

An aperture can include several services, and they may also be different. The minimum permitted separation between adjacent seals/apertures is 200mm. Services should be a minimum of 30mm from seal edges. Services within the seal do not require a minimum separation, except pipes where combustible pipe insulation penetrates the seal and plastic pipe penetrations which should be a minimum of 30mm from other services in the aperture. The total amount of cross sections of services (including insulation) should not exceed 60% of the penetration area.

ETA 13/0672 & 18/0855

For all technical details on the products specified please refer to the technical data sheets that can be found on www.protecta.eu

Signed and approved:

Client:

Job Title:

Products Protecta EX Mortar
Protecta FR Pipe Wrap 25m

Application Fire stopping of composite plastic pipes in rigid floors

Construction Minimum floor thickness of 150 mm and comprise aerated concrete or concrete with a minimum density of 650kg/m^3

Fire & Sound classification

Fire classifications in table on the left.

Sound reduction (seal only) 48dB

Polyseam Ltd, 15 St Andrews Road, Huddersfield, West Yorkshire, HD1 6SB
Tel: +44 (0) 148 4421036
Email: post.uk@polyseam.com

Sheet size:	Drawn date & no:
A4	4/3/19
Scale:	Drawn by:
NTS	K.B

Installation Instructions

1. Ensure the faces of the aperture opening are free of dust and any other contaminants. The faces may be moistened for better adhesion.
2. The seal can be positioned to either side of the construction or anywhere in between.
3. When installing Protecta® EX Mortar in hollow floor slabs or boards, level the fire seal with the soffit side. Ensure there is sufficient thickness of concrete below the void for the depth of mortar. Where this is not the case, tubular voids should be filled with stone wool normally the same thickness as the depth of the floor slab. Alternatively, simply fire seal on both sides.
4. Install a shutter board to achieve the required thickness of mortar. Make sure that this achieves a very tight seal.
5. Pour clean water into a suitable mixing vessel and add the mortar to obtain the required consistency. Mix steadily at low speed and ensure that any lumps of powder are fully dispersed. Always add the mortar to the water, do not reverse this mixing process
6. Once the desired consistency is achieved pour or trowel the mortar onto the shutter board making sure that it flows into all corners and around services. Apply a firm pressure to the mortar to eliminate any trapped air bubbles. Build up to the required depth.

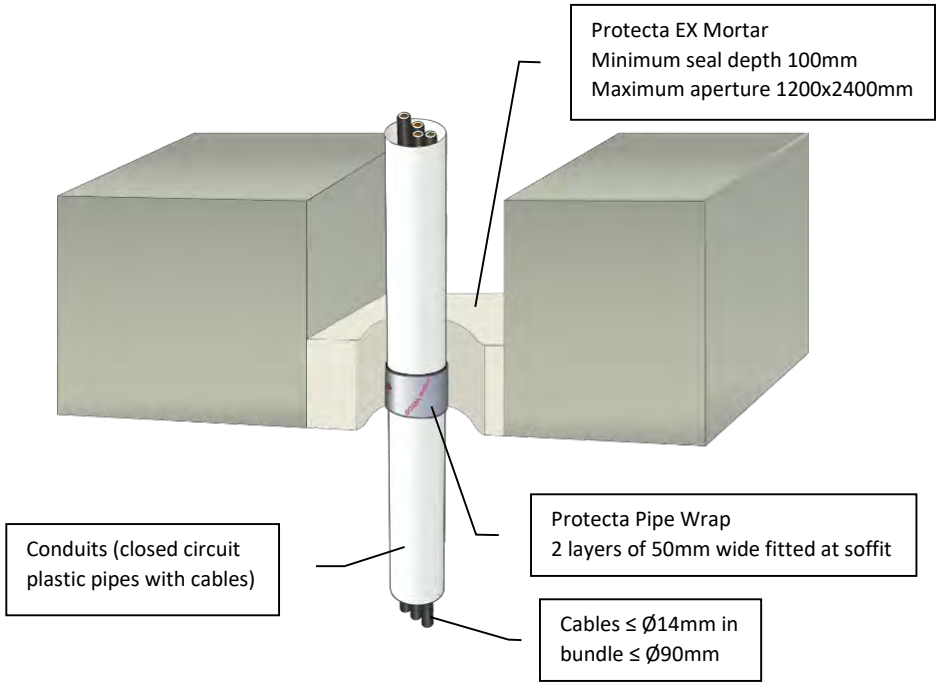

Loadbearing Properties

Soft body impact, serviceability 500Nm. Soft body impact, safety in use 700Nm. Hard body impact serviceability 6Nm. Hard body impact, safety in use 10Nm. Concentrated load to 15kN on size up to 1500mm x1000mm (no failure), 4.85kN on sizes up to 1200mm x 2400mm.

Minimum separations and limitations

An aperture can include several services, and they may also be different. The minimum permitted separation between adjacent seals/apertures is 200mm. Services should be a minimum of 30mm from seal edges. Services within the seal do not require a minimum separation, except pipes where combustible pipe insulation penetrates the seal and plastic pipe penetrations which should be a minimum of 30mm from other services in the aperture. The total amount of cross sections of services (including insulation) should not exceed 60% of the penetration area.

ETA 13/0672 & 18/0855

For all technical details on the products specified please refer to the technical data sheets that can be found on www.protecta.eu

Signed and approved:

Client:

Job Title:

Products	Protecta EX Mortar Protecta FR Pipe Wrap 25m
Application	Fire stopping of conduits in rigid floors
Construction	Minimum floor thickness of 150 mm and comprise aerated concrete or concrete with a minimum density of 650kg/m³

Fire & Sound classification

Conduits of PE, ABS & SAN+PVC plastic pipes ≤ Ø110mm — EI 60 U/C & E 120 U/C

Conduits of PVC-U & PVC-C plastic pipes ≤ Ø110mm — EI 120 U/C & E 120 U/C

Conduits of PP plastic pipes ≤ Ø110mm — EI 60 U/C & E 60 U/C

Sound reduction (seal only) — 48dB

Polyseam Ltd, 15 St Andrews Road, Huddersfield, West Yorkshire, HD1 6SB
Tel: +44 (0) 148 4421036
Email: post.uk@polyseam.com

Sheet size: **A4**	Drawn date & no: 4/3/19
Scale: **NTS**	Drawn by: K.B

Installation Instructions

1. Ensure the faces of the aperture opening are free of dust and any other contaminants. The faces may be moistened for better adhesion.
2. Bare metal passing through the seal must be protected against corrosion using a suitable primer/protection system.
3. The seal can be positioned to either side of the construction or anywhere in between.
4. When installing Protecta® EX Mortar in hollow floor slabs or boards, level the fire seal with the soffit side. Ensure there is sufficient thickness of concrete below the void for the depth of mortar. Where this is not the case, tubular voids should be filled with stone wool normally the same thickness as the depth of the floor slab.
5. Install a shutter board to achieve the required thickness of mortar. Make sure that this achieves a very tight seal.
6. Pour clean water into a suitable mixing vessel and add the mortar to obtain the required consistency. Mix steadily at low speed and ensure that any lumps of powder are fully dispersed. Always add the mortar to the water, do not reverse this mixing process.
7. Once the desired consistency is achieved pour or trowel the mortar onto the shutter board making sure that it flows into all corners and around services. Apply a firm pressure to the mortar to eliminate any trapped air bubbles. Build up to the required depth.
8. Insulate the ventilation duct towards the fire seal on the top side with 30mm thick stone wool matting to the length given on this page.

This product is certified to applicable European (EN) standards and UL-EU Mark service requirements.

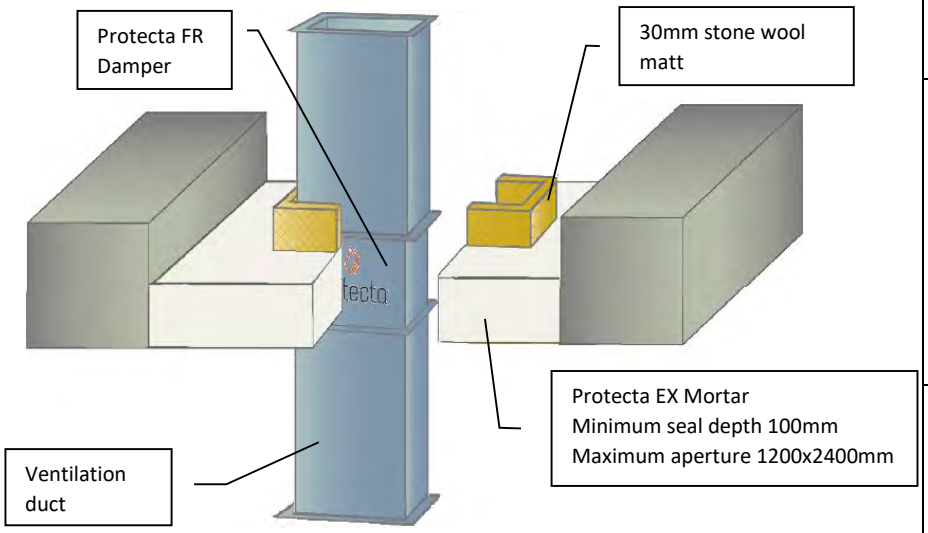

Loadbearing Properties
Soft body impact, serviceability 500Nm. Soft body impact, safety in use 700Nm. Hard body impact serviceability 6Nm. Hard body impact, safety in use 10Nm. Concentrated load to 15kN on size up to 1500mm x1000mm (no failure), 4.85kN on sizes up to 1200mm x 2400mm.

Minimum separations and limitations
An aperture can include several services, and they may also be different. The minimum permitted separation between adjacent seals/apertures is 200mm. Services should be a minimum of 30mm from seal edges. Services within the seal do not require a minimum separation, except pipes where combustible pipe insulation penetrates the seal and plastic pipe penetrations which should be a minimum of 30mm from other services in the aperture. The total amount of cross sections of services (including insulation) should not exceed 60% of the penetration area.

Client:

Job Title:

Products	Protecta EX Mortar Protecta FR Damper
Application	Fire stopping of ventilation ducts in rigid floors
Construction	Minimum floor thickness of 150 mm and comprise aerated concrete or concrete with a minimum density of 650kg/m³.

Fire & Sound classification

≤ Ø 400mm damper/duct with ≥ 150mm stone wool matt on the top side EI 120 & E 180
≤ Ø 1000mm damper/duct with ≥ 500mm stone wool matt on the top side EI 90 & E 90
≤ 600 x 1000mm damper/duct with ≥ 500mm stone wool matt on the top side EI 60 & E 90
≤ 1000 x 1000mm damper/duct with ≥ 500mm stone wool matt on the top side EI 90 & E 90

Sound reduction (seal only) 48dB

Polyseam Ltd, 15 St Andrews Road, Huddersfield, West Yorkshire, HD1 6SB
Tel: +44 (0) 148 4421036
Email: post.uk@polyseam.com

For all technical details on the products specified please refer to the technical data sheets that can be found on www.protecta.eu

Signed and approved:

Sheet size: **A4**	Drawn date & no: 27/7/17
Scale: **NTS**	Drawn by: K.B

Appendix V

-

Apertures with mixed services

MIXED SERVICE APERTURE
Fire Classification EI 30
Sound Reduction 29 dB

Installation details - Page 1 of 2

Installation Instructions

1. Before installing Protecta® FR Board ensure that the surface of all service penetrations and surrounding construction is free from all loose contaminants, dust and grease.
2. Protecta® FR Coating and Protecta® FR Acrylic are water based, so in cases where corrosion protection is a problem, some metals may require a barrier between the seal and the surface prior to this installation.
3. The coated side of the board should be flush with the surface of the gypsum on both sides.
4. When fire sealing shaft walls consisting of gypsum only on one side, subject to authority approval, install Protecta® FR Board on the exposed side. The board should be facing the (fire) exposed side.
5. Cut the required board(s) to suit the aperture dimensions and type and size of service penetration(s). All exposed and cut edges of the board can be sealed with Protecta® FR Coating or Protecta® FR Acrylic prior to fitting which will act as an adhesive and ensure a smoke tight seal.
6. All joints, gaps or imperfections in the installed seal must be filled with Protecta® FR Acrylic on both sides.
7. Protecta® FR Board can be over-painted with most emulsion or alkyd (gloss) paints.

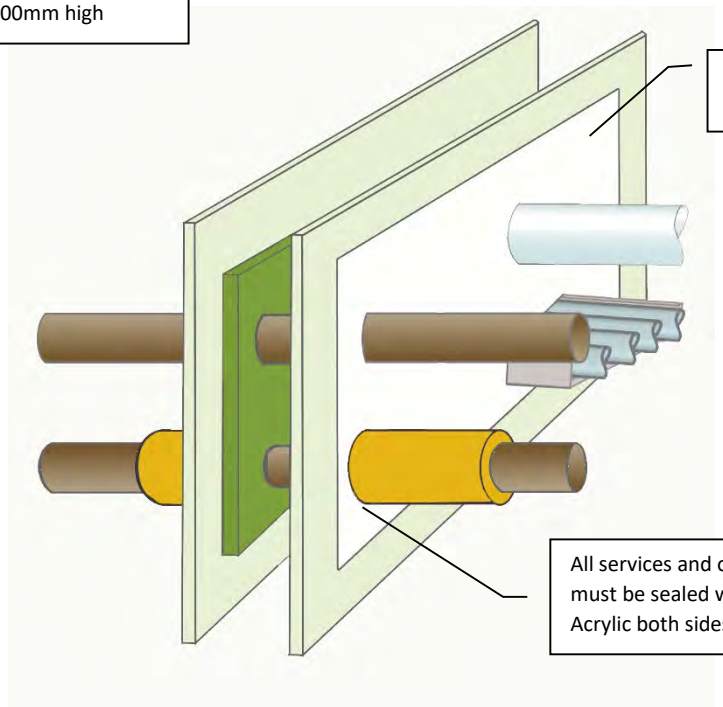

Minimum separations and limitations

An aperture can include several services, and they may also be different. The minimum permitted separation between adjacent seals/apertures is 200mm. Services should be a minimum of 25mm from seal edges. Services within the system Protecta® FR Board seal do not require a minimum separation, except pipes where pipe insulation penetrates the seal and plastic pipe penetrations which should be a minimum of 30mm from other services in the aperture. The total amount of cross sections of services (including insulation) should not exceed 60% of the penetration area.

Products	Protecta FR Board Protecta FR Acrylic
Construction	Minimum wall thickness of 75 mm and comprise steel studs or timber studs* lined on both faces with minimum 1 layer of 12.5 mm thick boards

Services

1. Cables and cable trays
2. Steel pipes
3. Plastic pipes

For full specification see page 2.

Indoor air comfort test results

- French A+ – Complies
- BREEAM-NOR – Complies
- DIBt – Complies
- M1 Protocol – Complies

Durability

Y_1 - Intended for use at temperatures below 0°C with exposure to UV and humidity but no exposure to rain. Includes lower classes Y_2, Z_1 and Z_2.

ETA 13/0673 & 18/0855

For all technical details on the products specified please refer to the technical data sheets that can be found on http://www.protecta.eu

Polyseam Ltd, 15 St Andrews Road, Huddersfield, West Yorkshire, HD1 6SB, United Kingdom
Tel: +44 (0) 1484 421 036

Scale:	Drawn by & date:
NTS	K.B. 16/3/19

Type of Services	Size of Services	Pipe wall thicknesses	Pipe Insulation	Pipe Wraps or Coat Back
Cables, single or bundled, with or without cable trays	≤ Ø80mm per cable	-	-	-
Steel pipes C/U	≤ Ø22mm per pipe	-	None	-
	≤ Ø324mm per pipe	-	20-30mm thick continuous stone wool ≥ 80kg/m^3	-
PVC-U and PVC-C pipes	≤ Ø32mm per pipe	1.0 – 1.8mm	None	None

MIXED SERVICE APERTURE
Fire Classification EI 60
Sound Reduction 29 dB

Installation details - Page 1 of 2

Installation Instructions

1. Before installing Protecta® FR Board ensure that the surface of all service penetrations and surrounding construction is free from all loose contaminants, dust and grease.
2. The board can be positioned to either side of the construction or anywhere in between.
3. When fire sealing shaft walls consisting of gypsum only on one side, subject to authority approval, install Protecta® FR Board on the (fire) exposed side.
4. Cut the required board(s) to suit the aperture dimensions and type and size of service penetration(s). All exposed and cut edges of the board can be sealed with Protecta® FR Coating or Protecta® FR Acrylic prior to fitting which will act as an adhesive and ensure a smoke tight seal.
5. All joints, gaps or imperfections in the installed seal must be filled with Protecta® FR Acrylic on both sides.
6. Protecta® FR Board can be over-painted with most emulsion or alkyd (gloss) paints.

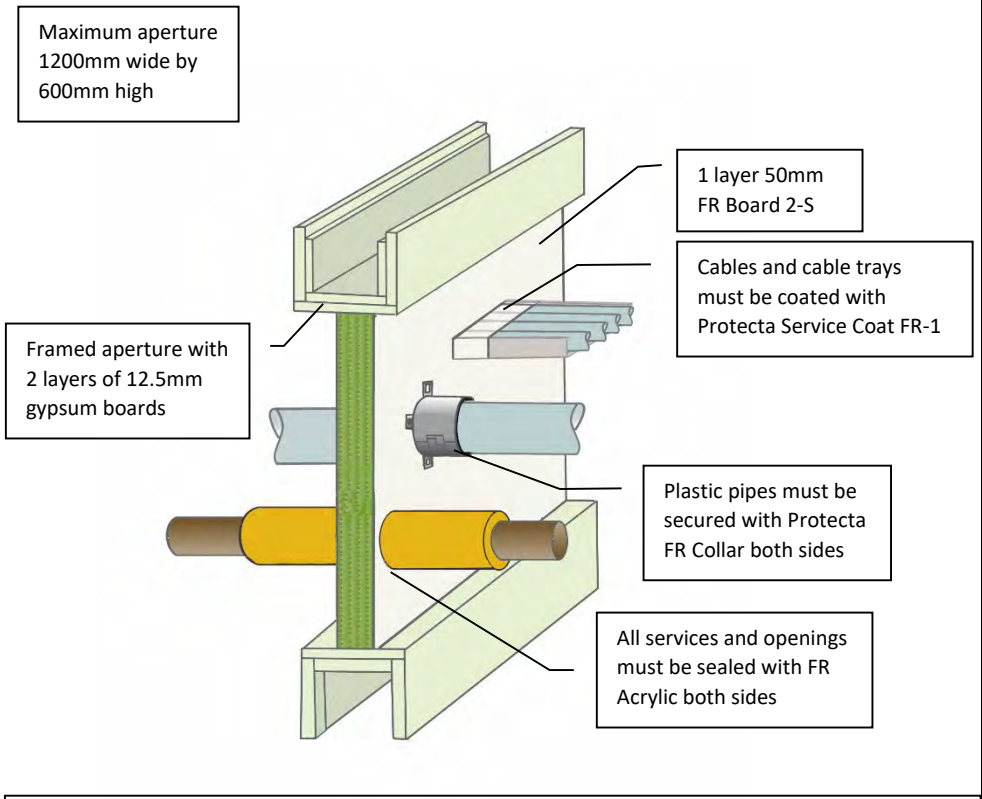

Products
Protecta FR Board
Protecta FR Acrylic
Protecta FR Collar
Protecta ServiceCoat FR-1

Construction
Minimum wall thickness of 100 mm and comprise steel studs or timber studs* lined on both faces with minimum 2 layers of 12.5 mm thick boards.

Services

1. Cables, cable trays and ladders
2. Steel pipes
3. Plastic pipes

For full specification see page 2.

Indoor air comfort test results

- French A+ – Complies
- BREEAM-NOR – Complies
- DIBt – Complies
- M1 Protocol – Complies

Durability

Y_1 - Intended for use at temperatures below 0°C with exposure to UV and humidity but no exposure to rain. Includes lower classes Y_2, Z_1 and Z_2.

Minimum separations and limitations

An aperture can include several services, and they may also be different. The minimum permitted separation between adjacent seals/apertures is 200mm. Services should be a minimum of 25mm from seal edges. Services within the system Protecta® FR Board seal do not require a minimum separation, except pipes where pipe insulation penetrates the seal and plastic pipe penetrations which should be a minimum of 30mm from other services in the aperture. The total amount of cross sections of services (including insulation) should not exceed 60% of the penetration area.

ETA 13/0673 & 18/0855

For all technical details on the products specified please refer to the technical data sheets that can be found on http://www.protecta.eu

Polyseam Ltd, 15 St Andrews Road, Huddersfield, West Yorkshire, HD1 6SB, United Kingdom
Tel: +44 (0) 1484 421 036

Scale:	Drawn by & date:
NTS	K.B. 16/3/19

Type of Services	Size of Services	Pipe wall thicknesses	Pipe Insulation	Pipe Collars or Coat Back
Cables, single or bundled, with or without perforated cable trays and ladders	≤ Ø80mm per cable	-	-	150mm each side with 300µ WFT Protecta Service Coat FR-1
Steel pipes C/U	≤ Ø324mm per pipe	-	20-30mm thick continuous stone wool ≥ 80kg/m³	-
PVC-U and PVC-C pipes U/C	≤ Ø110mm per pipe	1.9 – 6.6mm	None	Protecta FR Collar 50mm high ≤ Ø110mm with pig tail fixings on both sides
PE, ABS and SAN+PVC pipes C/C	≤ Ø110mm per pipe	3.0 – 10.0mm		

MIXED SERVICE APERTURE
Fire Classification EI 60
Sound Reduction 52 dB

Installation details - Page 1 of 4

Installation Instructions

1. Before installing Protecta® FR Board ensure that the surface of all service penetrations and surrounding construction is free from all loose contaminants, dust and grease.
2. Protecta® FR Coating and Protecta® FR Acrylic are water based, so in cases where corrosion protection is a problem, some metals may require a barrier between the seal and the surface prior to this installation.
3. The coated side of the board should be flush with the surface of the gypsum on both sides.
4. When fire sealing shaft walls consisting of gypsum only on one side, subject to authority approval, install Protecta® FR Board on the exposed side. The board should be facing the (fire) exposed side.
5. Cut the required board(s) to suit the aperture dimensions and type and size of service penetration(s). All exposed and cut edges of the board can be sealed with Protecta® FR Coating or Protecta® FR Acrylic prior to fitting which will act as an adhesive and ensure a smoke tight seal.
6. All joints, gaps or imperfections in the installed seal must be filled with Protecta® FR Acrylic on both sides.
7. Protecta® FR Board can be over-painted with most emulsion or alkyd (gloss) paints.

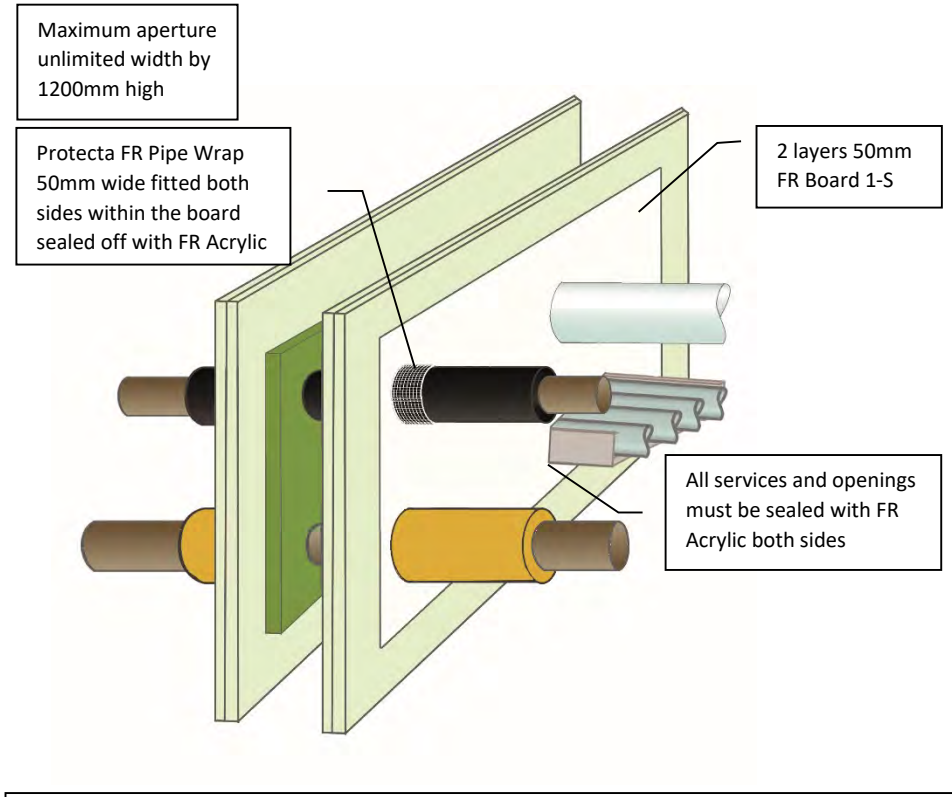

Minimum separations and limitations

An aperture can include several services, and they may also be different. The minimum permitted separation between adjacent seals/apertures is 200mm. Services should be a minimum of 25mm from seal edges. Services within the system Protecta® FR Board seal do not require a minimum separation, except pipes where pipe insulation penetrates the seal and plastic pipe penetrations which should be a minimum of 30mm from other services in the aperture. The total amount of cross sections of services (including insulation) should not exceed 60% of the penetration area.

Products Protecta FR Board
Protecta FR Acrylic
Protecta FR Pipe Wrap

Construction Minimum wall thickness of 100 mm and comprise steel studs or timber studs* lined on both faces with minimum 2 layers of 12.5 mm thick boards.

Services

1. Cables, with or without cable trays
2. Steel pipes
3. Copper pipes
4. Alupex pipes
5. Plastic pipes
6. Composite pipes
7. Conduits
8. Ventilation ducts

For full specification see pages 2 - 4.

Indoor air comfort test results

- French A+ – Complies
- BREEAM-NOR – Complies
- DIBt – Complies
- M1 Protocol – Complies

Durability

Y_1 - Intended for use at temperatures below 0°C with exposure to UV and humidity but no exposure to rain. Includes lower classes Y_2, Z_1 and Z_2.

ETA 13/0673 & 18/0855

For all technical details on the products specified please refer to the technical data sheets that can be found on http://www.protecta.eu

Polyseam Ltd, 15 St Andrews Road, Huddersfield, West Yorkshire, HD1 6SB, United Kingdom
Tel: +44 (0) 1484 421 036

Scale: **NTS**

Drawn by & date: K.B. 16/3/19

Type of Services	Size of Services	Pipe wall thicknesses	Pipe Insulation	Pipe config	Pipe Wraps
Cables, single or bundled, with or w/o trays	≤ Ø80mm per cable	-	-	-	-
Unsheathed cables/wires, with or w/o trays	≤ 185mm^2 per wire	-	-	-	-
Steel or PVC conduits, with or w/o trays	≤ Ø16mm per conduit	-	-	C/U	-
Steel pipes	≤ Ø22mm per pipe	-	None	C/U	-
	≤ Ø40mm per pipe	-	13mm thick continuous elastomeric or PE	U/U	1 layer of 50mm wide both sides
	≤ Ø165mm per pipe	-	13 - 32mm thick continuous elastomeric or PE	U/U	2 layers of 50mm wide both sides
	≤ Ø324mm per pipe	-	32 - 50mm thick continuous elastomeric or PE	C/U	3 layers of 50mm wide both sides
	≤ Ø324mm per pipe	-	20 - 80mm thick continuous stone wool ≥ 80kg/m^3	C/U	-
	≤ Ø40mm per pipe	-	≥ 20mm thick x 500mm long stone wool ≥ 80 kg/m^3 both sides	C/U	-
	≤ Ø219mm per pipe	-	≥ 30mm thick x 500mm long stone wool ≥ 80 kg/m^3 both sides	C/U	-
Copper pipes	≤ Ø6mm per pipe	-	None	C/C	-
	≤ Ø54mm per pipe	-	9 - 25mm thick continuous elastomeric or PE	C/C	2 layers of 50mm wide both sides
	≤ Ø54mm per pipe	-	≥ 20mm thick x 500mm long stone wool ≥ 80 kg/m^3 both sides	C/C	-
Alupex pipes	≤ Ø20mm per pipe	-	None	C/C	-
	≤ Ø75mm per pipe	-	9 - 25mm thick continuous elastomeric or PE	C/C	2 layers of 50mm wide both sides
	≤ Ø75mm per pipe	-	≥ 20mm thick x 500mm long stone wool ≥ 80 kg/m^3 both sides	C/C	-
PVC-U & PVC-C pipes	≤ Ø32mm per pipe	1.0-2.4mm	-	U/C	None
	≤ Ø40mm per pipe	1.9-3.0mm	-	U/U	1 layer of 50mm wide both sides
	≤ Ø110mm per pipe	2.7-6.6mm	-	U/C	2 layers of 50mm wide both sides
	≤ Ø125mm per pipe	3.7-7.4mm	-	U/C	3 layers of 50mm wide both sides
	≤ Ø160mm per pipe	9.5mm	-	U/C	4 layers of 50mm wide both sides
	≤ Ø315mm per pipe	7.7-12.1mm	-	C/C	10 layers of 50mm wide both sides
	≤ Ø400mm per pipe	9.8-15.3mm	-	C/C	16 layers of 50mm wide both sides

Type of Services	Size of Services	Pipe wall thicknesses	Pipe Insulation	Pipe config	Pipe Wraps
PE, ABS and SAN+PVC pipes	≤ Ø32mm per pipe	2.0-3.0mm	-	U/C	None
	≤ Ø40mm per pipe	2.4-3.7mm	-	U/U	1 layer of 50mm wide both sides
	≤ Ø110mm per pipe	4.2-10.0mm	-	U/C	2 layers of 50mm wide both sides
	≤ Ø125mm per pipe	4.8-12.0mm	-	U/C	3 layers of 50mm wide both sides
	≤ Ø160mm per pipe	14.6mm	-	U/C	4 layers of 50mm wide both sides
PP pipes	≤ Ø32mm per pipe	1.8-2.2mm	-	U/C	None
	≤ Ø40mm per pipe	1.8-5.5mm	-	U/U	1 layer of 50mm wide both sides
	≤ Ø110mm per pipe	2.7-15.1mm	-	U/U	2 layers of 50mm wide both sides
	≤ Ø125mm per pipe	3.1-17.1mm	-	U/C	3 layers of 50mm wide both sides
	≤ Ø160mm per pipe	21.9mm	-	U/C	4 layers of 50mm wide both sides
PEX pipe-in-pipes	≤ Ø25mm per pipe	-	-	C/C	None
	≤ Ø54mm per pipe	-	-	C/C	2 layers of 50mm wide both sides
	≤ Ø25mm in bundles ≤ Ø50mm	-	-	C/C	2 layers of 50mm wide both sides
Aquatherm Green SDR9 pipes	Ø32mm per pipe	-	-	C/C	1 layer of 50mm wide both sides
	≤ Ø110mm per pipe	-	-	C/C	2 layers of 50mm wide both sides
BluePower pipes	≤ Ø50mm per pipe	-	-	U/U	2 layers of 50mm wide both sides
	≤ Ø110mm per pipe	-	-	C/U	2 layers of 50mm wide both sides
Geberit Silent-PP pipes	≤ Ø50mm per pipe	-	-	U/U	2 layers of 50mm wide both sides
	≤ Ø110mm per pipe	-	-	U/C	2 layers of 50mm wide both sides
Polo-Kal NG pipes	≤ Ø50mm per pipe	-	-	U/U	2 layers of 50mm wide both sides
	≤ Ø110mm per pipe	-	-	U/C	2 layers of 50mm wide both sides
	Ø125mm per pipe	-	-	U/C	4 layers of 50mm wide both sides
	Ø160mm per pipe	-	-	U/C	6 layers of 50mm wide both sides

Type of Services	Size of Services	Pipe wall thicknesses	Pipe Insulation	Pipe config	Pipe Wraps
Rehau Raupiano Plus pipes	≤ Ø50mm per pipe	-	-	U/U	2 layers of 50mm wide both sides
	≤ Ø110mm per pipe	-	-	U/C	2 layers of 50mm wide both sides
	Ø125mm per pipe	-	-	U/C	4 layers of 50mm wide both sides
	Ø160mm per pipe	-	-	U/C	6 layers of 50mm wide both sides
Wavin SiTech pipes	≤ Ø50mm per pipe	-	-	U/U	2 layers of 50mm wide both sides
	≤ Ø110mm per pipe	-	-	U/C	2 layers of 50mm wide both sides
Conduits of PVC-U & PVC-C pipes	≤ Ø110mm w/cables ≤ Ø14mm	2.7-6.6mm	-	U/C	2 layers of 50mm wide both sides
Conduits of PE, ABS & SAN+PVC pipes	≤ Ø110mm w/cables ≤ Ø14mm	4.2-10.0mm	-	U/C	2 layers of 50mm wide both sides
Conduits of PP pipe	≤ Ø110mm w/cables ≤ Ø14mm	2.7-15.1mm	-	U/C	2 layers of 50mm wide both sides
Ventilation ducts	≤ Ø400mm	-	≥ 30mm thick x 20cm long stonewool mat ≥80kg/m^3 both sides	-	Protecta FR Damper
	≤ Ø1250mm	-	≥ 30mm thick x 50cm long stonewool mat ≥80kg/m^3 both sides	-	Protecta FR Damper
	≤ 1200mm high x 1700mm w	-	≥ 30mm thick x 50cm long stonewool mat ≥80kg/m^3 both sides	-	Protecta FR Damper

MIXED SERVICE APERTURE
Fire Classification EI 60
Sound Reduction 29 dB

Installation details - Page 1 of 2

Installation Instructions

1. Before installing Protecta® FR Board ensure that the surface of all service penetrations and surrounding construction is free from all loose contaminants, dust and grease.
2. Protecta® FR Coating and Protecta® FR Acrylic are water based, so in cases where corrosion protection is a problem, some metals may require a barrier between the seal and the surface prior to this installation.
3. The board can be positioned to either side of the construction or anywhere in between.
4. Cut the required board(s) to suit the aperture dimensions and type and size of service penetration(s). All exposed and cut edges of the board can be sealed with Protecta® FR Coating or Protecta® FR Acrylic prior to fitting which will act as an adhesive and ensure a smoke tight seal.
5. All joints, gaps or imperfections in the installed seal must be filled with Protecta® FR Acrylic on both sides.
6. Protecta® FR Board can be over-painted with most emulsion or alkyd (gloss) paints.

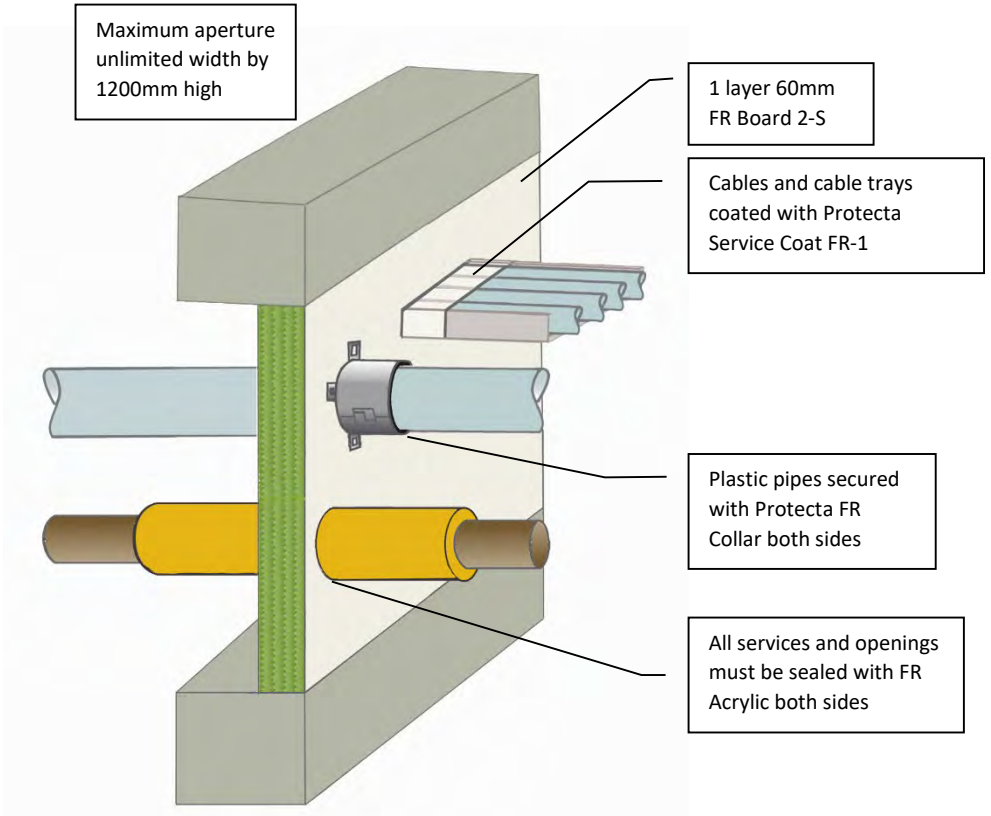

Minimum separations and limitations

An aperture can include several services, and they may also be different. The minimum permitted separation between adjacent seals/apertures is 200mm. Services should be a minimum of 25mm from seal edges. Services within the system Protecta® FR Board seal do not require a minimum separation, except pipes where pipe insulation penetrates the seal and plastic pipe penetrations which should be a minimum of 30mm from other services in the aperture. The total amount of cross sections of services (including insulation) should not exceed 60% of the penetration area.

Products
Protecta FR Board
Protecta FR Acrylic
Protecta FR Collar
Protecta ServiceCoat FR-1

Construction
Minimum wall thickness of 100 mm and comprise concrete, aerated concrete or masonry, with a density of ≥ 650 kg/m³

Services

1. Cables, cable trays and ladders
2. Steel pipes
3. Copper pipes
4. Alupex pipes
5. Plastic pipes

For full specification see page 2.

Indoor air comfort test results

- French A+ – Complies
- BREEAM-NOR – Complies
- DIBt – Complies
- M1 Protocol – Complies

Durability

Y_1 - Intended for use at temperatures below 0°C with exposure to UV and humidity but no exposure to rain. Includes lower classes Y_2, Z_1 and Z_2.

ETA 13/0673 & 18/0855

For all technical details on the products specified please refer to the technical data sheets that can be found on http://www.protecta.eu

Polyseam Ltd, 15 St Andrews Road, Huddersfield, West Yorkshire, HD1 6SB, United Kingdom
Tel: +44 (0) 1484 421 036

Scale: **NTS**

Drawn by & date: K.B. 16/3/19

Type of Services	Size of Services	Pipe wall thicknesses	Pipe Insulation	Pipe config	Collars or Coat Back
Cables	≤ Ø21mm per cable	-	-	-	None
Cables single or bundled, with or without perforated cable trays and ladders	≤ Ø80mm per cable	-	-	-	150mm each side with 300µ WFT Protecta Service Coat FR-1
Steel pipes	≤ Ø324mm per pipe	-	20 - 30mm thick continuous stone wool ≥ 80kg/m^3	C/U	-
	≤ Ø40mm per pipe	-	≥ 20mm thick x 100cm long stone wool ≥ 80 kg/m^3 both sides	C/U	-
	≤ Ø219mm per pipe	-	≥ 30mm thick x 100cm long stone wool ≥ 80 kg/m^3 both sides	C/U	-
Copper pipes	≤ Ø54mm per pipe	-	≥ 20mm thick x 100cm long stone wool ≥ 80 kg/m^3 both sides	C/U	-
Alupex pipes	≤ Ø75mm per pipe	-	≥ 30mm thick x 60cm long stone wool ≥ 80 kg/m^3 both sides	C/C	-
PVC-U and PVC-C pipes	≤ Ø110mm per pipe	1.9 – 6.6mm	-	U/C	Protecta FR Collar 50mm high ≤ Ø110mm with pig tail fixings
PE, ABS and SAN+PVC pipes	≤ Ø110mm per pipe	3.0 – 10.0mm	-	C/C	

MIXED SERVICE APERTURE
Fire Classification E 120
Sound Reduction 29 dB

Installation details - Page 1 of 2

Installation Instructions

1. Before installing Protecta® FR Board ensure that the surface of all service penetrations and surrounding construction is free from all loose contaminants, dust and grease.
2. Protecta® FR Coating and Protecta® FR Acrylic are water based, so in cases where corrosion protection is a problem, some metals may require a barrier between the seal and the surface prior to this installation.
3. The board can be positioned to either side of the construction or anywhere in between.
4. Cut the required board(s) to suit the aperture dimensions and type and size of service penetration(s). All exposed and cut edges of the board can be sealed with Protecta® FR Coating or Protecta® FR Acrylic prior to fitting which will act as an adhesive and ensure a smoke tight seal.
5. All joints, gaps or imperfections in the installed seal must be filled with Protecta® FR Acrylic on both sides.
6. Protecta® FR Board can be over-painted with most emulsion or alkyd (gloss) paints.

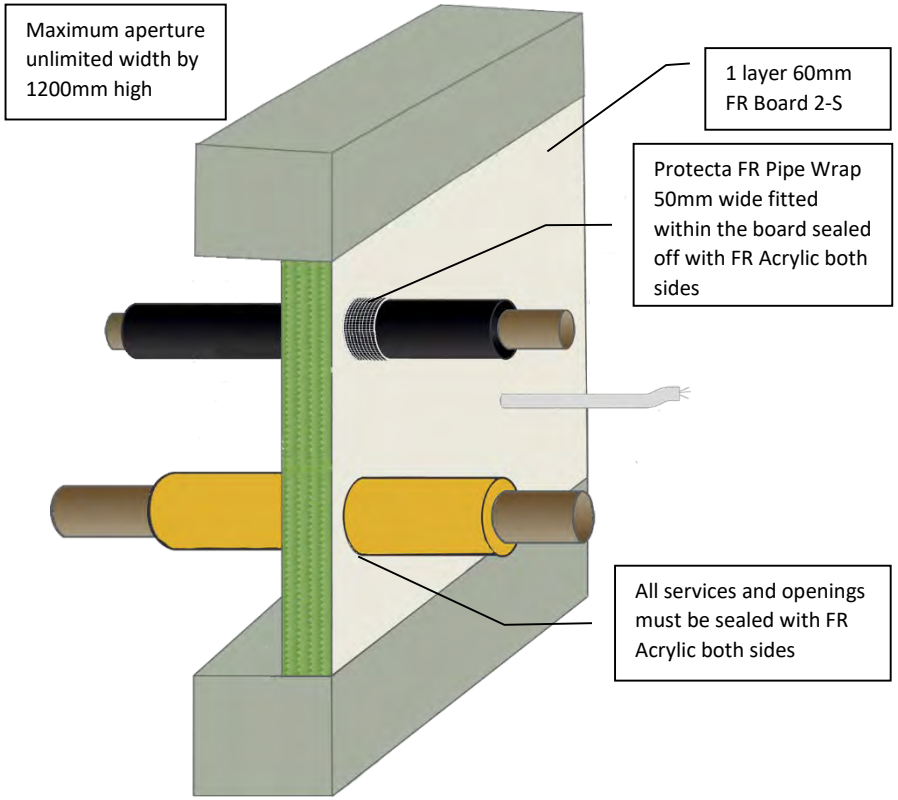

Products	Protecta FR Board Protecta FR Acrylic Protecta FR Pipe Wrap
Construction	Minimum wall thickness of 150 mm and comprise concrete, aerated concrete or masonry, with a density of ≥ 650 kg/m^3

Services

1. Cables
2. Steel pipes
3. Copper pipes
4. Alupex pipes

For full specification see page 2.

Indoor air comfort test results

- French A+ – Complies
- BREEAM-NOR – Complies
- DIBt – Complies
- M1 Protocol – Complies

Durability

Y_1 - Intended for use at temperatures below 0°C with exposure to UV and humidity but no exposure to rain. Includes lower classes Y_2, Z_1 and Z_2.

Minimum separations and limitations

An aperture can include several services, and they may also be different. The minimum permitted separation between adjacent seals/apertures is 200mm. Services should be a minimum of 25mm from seal edges. Services within the system Protecta® FR Board seal do not require a minimum separation, except pipes where pipe insulation penetrates the seal and plastic pipe penetrations which should be a minimum of 30mm from other services in the aperture. The total amount of cross sections of services (including insulation) should not exceed 60% of the penetration area.

ETA 13/0673 & 18/0855

For all technical details on the products specified please refer to the technical data sheets that can be found on http://www.protecta.eu

Polyseam Ltd, 15 St Andrews Road, Huddersfield, West Yorkshire, HD1 6SB, United Kingdom
Tel: +44 (0) 1484 421 036

Scale:	Drawn by & date:
NTS	K.B. 7/4/19

Type of Services	Size of Services	Pipe wall thicknesses	Pipe Insulation	Pipe config	Pipe Wraps
Cables	≤ Ø21mm per cable	-	-	-	None
Steel pipes	≤ Ø165mm per pipe	-	9 - 25mm thick continuous elastomeric or PE	C/U	1 layer of 50mm wide
	≤ Ø324mm per pipe	-	30mm thick continuous stone wool ≥ 80kg/m^3	C/U	-
	≤ Ø40mm per pipe	-	≥ 20mm thick x 100cm long stone wool ≥ 80 kg/m^3 both sides	C/U	-
	≤ Ø219mm per pipe	-	≥ 30mm thick x 100cm long stone wool ≥ 80 kg/m^3 both sides	C/U	-
Copper pipes	≤ Ø54mm per pipe	-	≥ 20mm thick x 100cm long stone wool ≥ 80 kg/m^3 both sides	C/U	-
Alupex pipes	≤ Ø75mm per pipe	-	≥ 30mm thick x 60cm long stone wool ≥ 80 kg/m^3 both sides	C/C	-

MIXED SERVICE APERTURE
Fire Classification EI 60
Sound Reduction 52 dB

Installation details - Page 1 of 4

Installation Instructions

1. Before installing Protecta® FR Board ensure that the surface of all service penetrations and surrounding construction is free from all loose contaminants, dust and grease.
2. Protecta® FR Coating and Protecta® FR Acrylic are water based, so in cases where corrosion protection is a problem, some metals may require a barrier between the seal and the surface prior to this installation.
3. The boards should be flush with the surface of the construction on both sides to maximize the fire resistance.
4. Cut the required board(s) to suit the aperture dimensions and type and size of service penetration(s). All exposed and cut edges of the board can be sealed with Protecta® FR Coating or Protecta® FR Acrylic prior to fitting which will act as an adhesive and ensure a smoke tight seal.
5. All joints, gaps or imperfections in the installed seal must be filled with Protecta® FR Acrylic on both sides.
6. Protecta® FR Board can be over-painted with most emulsion or alkyd (gloss) paints.

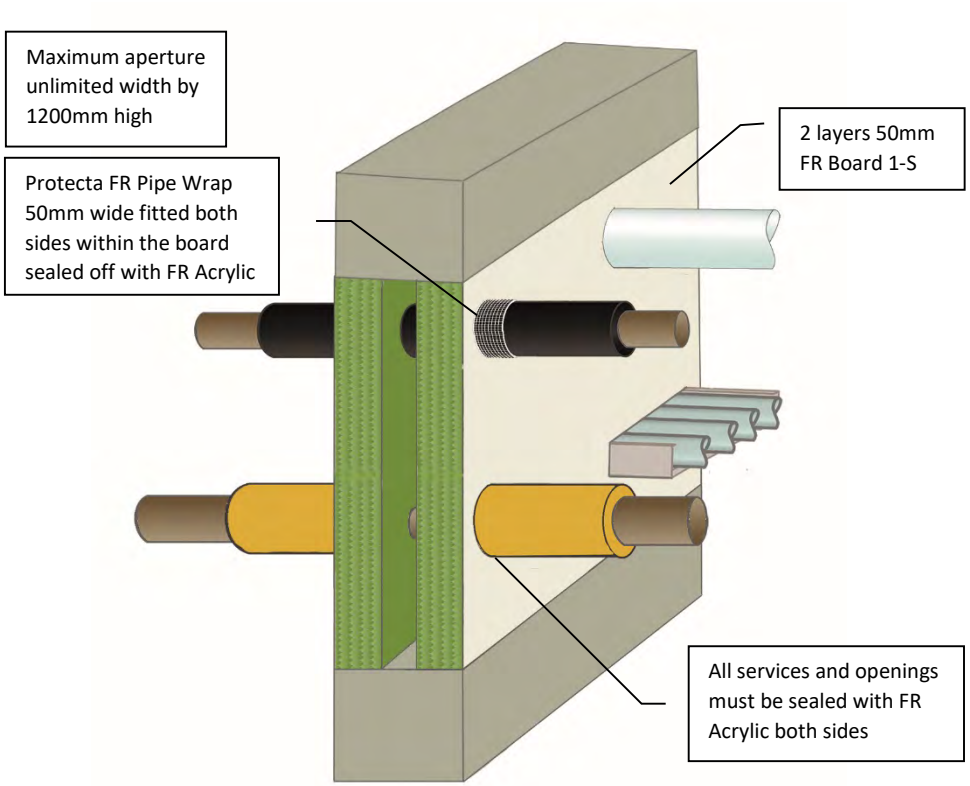

Products Protecta FR Board
Protecta FR Acrylic
Protecta FR Pipe Wrap

Construction Minimum wall thickness of 100 mm and comprise concrete, aerated concrete or masonry, with a density of ≥ 650 kg/m³

Services

1. Cables, with or without cable trays
2. Steel pipes
3. Copper pipes
4. Alupex pipes
5. Plastic pipes
6. Composite pipes
7. Conduits
8. Ventilation ducts

For full specification see pages 2 - 4.

Indoor air comfort test results

- French A+ – Complies
- BREEAM-NOR – Complies
- DIBt – Complies
- M1 Protocol – Complies

Durability

Y_1 - Intended for use at temperatures below 0°C with exposure to UV and humidity but no exposure to rain. Includes lower classes Y_2, Z_1 and Z_2.

Minimum separations and limitations

An aperture can include several services, and they may also be different. The minimum permitted separation between adjacent seals/apertures is 200mm. Services should be a minimum of 25mm from seal edges. Services within the system Protecta® FR Board seal do not require a minimum separation, except pipes where pipe insulation penetrates the seal and plastic pipe penetrations which should be a minimum of 30mm from other services in the aperture. The total amount of cross sections of services (including insulation) should not exceed 60% of the penetration area.

ETA 13/0673 & 18/0855

For all technical details on the products specified please refer to the technical data sheets that can be found on http://www.protecta.eu

Polyseam Ltd, 15 St Andrews Road, Huddersfield, West Yorkshire, HD1 6SB, United Kingdom
Tel: +44 (0) 1484 421 036

Scale: **NTS**

Drawn by & date: K.B. 16/3/19

Type of Services	Size of Services	Pipe wall thicknesses	Pipe Insulation	Pipe config	Pipe Wraps
Cables, single or bundled, with or w/o trays	≤ Ø80mm per cable	-	-	-	-
Unsheathed cables/wires, with or w/o trays	≤ 185mm^2 per wire	-	-	-	-
Steel or PVC conduits, with or w/o trays	≤ Ø16mm per conduit	-	-	C/U	-
Steel pipes	≤ Ø22mm per pipe	-	None	C/U	-
	≤ Ø40mm per pipe	-	13mm thick continuous elastomeric or PE	U/U	1 layer of 50mm wide both sides
	≤ Ø165mm per pipe	-	13 - 32mm thick continuous elastomeric or PE	U/U	2 layers of 50mm wide both sides
	≤ Ø324mm per pipe	-	32 - 50mm thick continuous elastomeric or PE	C/U	3 layers of 50mm wide both sides
	≤ Ø324mm per pipe	-	20 - 80mm thick continuous stone wool ≥ 80kg/m^3	C/U	-
	≤ Ø40mm per pipe	-	≥ 20mm thick x 500mm long stone wool ≥ 80 kg/m^3 both sides	C/U	-
	≤ Ø219mm per pipe	-	≥ 30mm thick x 500mm long stone wool ≥ 80 kg/m^3 both sides	C/U	-
Copper pipes	≤ Ø6mm per pipe	-	None	C/C	-
	≤ Ø54mm per pipe	-	9 - 25mm thick continuous elastomeric or PE	C/C	2 layers of 50mm wide both sides
	≤ Ø54mm per pipe	-	≥ 20mm thick x 500mm long stone wool ≥ 80 kg/m^3 both sides	C/C	-
Alupex pipes	≤ Ø20mm per pipe	-	None	C/C	-
	≤ Ø75mm per pipe	-	9 - 25mm thick continuous elastomeric or PE	C/C	2 layers of 50mm wide both sides
	≤ Ø75mm per pipe	-	≥ 20mm thick x 500mm long stone wool ≥ 80 kg/m^3 both sides	C/C	-
PVC-U & PVC-C pipes	≤ Ø32mm per pipe	1.0-2.4mm	-	U/C	None
	≤ Ø40mm per pipe	1.9-3.0mm	-	U/U	1 layer of 50mm wide both sides
	≤ Ø110mm per pipe	2.7-6.6mm	-	U/C	2 layers of 50mm wide both sides
	≤ Ø125mm per pipe	3.7-7.4mm	-	U/C	3 layers of 50mm wide both sides
	≤ Ø160mm per pipe	9.5mm	-	U/C	4 layers of 50mm wide both sides
	≤ Ø315mm per pipe	7.7-12.1mm	-	C/C	10 layers of 50mm wide both sides
	≤ Ø400mm per pipe	9.8-15.3mm	-	C/C	16 layers of 50mm wide both sides

Type of Services	Size of Services	Pipe wall thicknesses	Pipe Insulation	Pipe config	Pipe Wraps
PE, ABS and SAN+PVC pipes	≤ Ø32mm per pipe	2.0-3.0mm	-	U/C	None
	≤ Ø40mm per pipe	2.4-3.7mm	-	U/U	1 layer of 50mm wide both sides
	≤ Ø110mm per pipe	4.2-10.0mm	-	U/C	2 layers of 50mm wide both sides
	≤ Ø125mm per pipe	4.8-12.0mm	-	U/C	3 layers of 50mm wide both sides
	≤ Ø160mm per pipe	14.6mm	-	U/C	4 layers of 50mm wide both sides
PP pipes	≤ Ø32mm per pipe	1.8-2.2mm	-	U/C	None
	≤ Ø40mm per pipe	1.8-5.5mm	-	U/U	1 layer of 50mm wide both sides
	≤ Ø110mm per pipe	2.7-15.1mm	-	U/U	2 layers of 50mm wide both sides
	≤ Ø125mm per pipe	3.1-17.1mm	-	U/C	3 layers of 50mm wide both sides
	≤ Ø160mm per pipe	21.9mm	-	U/C	4 layers of 50mm wide both sides
PEX pipe-in-pipes	≤ Ø25mm per pipe	-	-	C/C	None
	≤ Ø54mm per pipe	-	-	C/C	2 layers of 50mm wide both sides
	≤ Ø25mm in bundles ≤ Ø50mm	-	-	C/C	2 layers of 50mm wide both sides
Aquatherm Green SDR9 pipes	Ø32mm per pipe	-	-	C/C	1 layer of 50mm wide both sides
	≤ Ø110mm per pipe	-	-	C/C	2 layers of 50mm wide both sides
BluePower pipes	≤ Ø50mm per pipe	-	-	U/U	2 layers of 50mm wide both sides
	≤ Ø110mm per pipe	-	-	C/U	2 layers of 50mm wide both sides
Geberit Silent-PP pipes	≤ Ø50mm per pipe	-	-	U/U	2 layers of 50mm wide both sides
	≤ Ø110mm per pipe	-	-	U/C	2 layers of 50mm wide both sides
Polo-Kal NG pipes	≤ Ø50mm per pipe	-	-	U/U	2 layers of 50mm wide both sides
	≤ Ø110mm per pipe	-	-	U/C	2 layers of 50mm wide both sides
	Ø125mm per pipe	-	-	U/C	4 layers of 50mm wide both sides
	Ø160mm per pipe	-	-	U/C	6 layers of 50mm wide both sides

Type of Services	Size of Services	Pipe wall thicknesses	Pipe Insulation	Pipe config	Pipe Wraps
Rehau Raupiano Plus pipes	≤ Ø50mm per pipe	-	-	U/U	2 layers of 50mm wide both sides
	≤ Ø110mm per pipe	-	-	U/C	2 layers of 50mm wide both sides
	Ø125mm per pipe	-	-	U/C	4 layers of 50mm wide both sides
	Ø160mm per pipe	-	-	U/C	6 layers of 50mm wide both sides
Wavin SiTech pipes	≤ Ø50mm per pipe	-	-	U/U	2 layers of 50mm wide both sides
	≤ Ø110mm per pipe	-	-	U/C	2 layers of 50mm wide both sides
Conduits of PVC-U & PVC-C pipes	≤ Ø110mm w/cables ≤ Ø14mm	2.7-6.6mm	-	U/C	2 layers of 50mm wide both sides
Conduits of PE, ABS & SAN+PVC pipes	≤ Ø110mm w/cables ≤ Ø14mm	4.2-10.0mm	-	U/C	2 layers of 50mm wide both sides
Conduits of PP pipe	≤ Ø110mm w/cables ≤ Ø14mm	2.7-15.1mm	-	U/C	2 layers of 50mm wide both sides
Ventilation ducts	≤ Ø400mm	-	≥ 30mm thick x 20cm long stonewool mat ≥80kg/m^3 both sides	-	Protecta FR Damper
	≤ Ø1250mm	-	≥ 30mm thick x 50cm long stonewool mat ≥80kg/m^3 both sides	-	Protecta FR Damper
	≤ 1200mm high x 1700mm w	-	≥ 30mm thick x 50cm long stonewool mat ≥80kg/m^3 both sides	-	Protecta FR Damper

MIXED SERVICE APERTURE
Fire Classification EI 120
Sound Reduction 52 dB

Installation details - Page 1 of 3

Installation Instructions

1. Before installing Protecta® FR Board ensure that the surface of all service penetrations and surrounding construction is free from all loose contaminants, dust and grease.
2. Protecta® FR Coating and Protecta® FR Acrylic are water based, so in cases where corrosion protection is a problem, some metals may require a barrier between the seal and the surface prior to this installation.
3. The boards should be flush with the surface of the construction on both sides to maximize the fire resistance. If this is not possible, there should be an air gap of at least 30mm between the boards.
4. Cut the required board(s) to suit the aperture dimensions and type and size of service penetration(s). All exposed and cut edges of the board can be sealed with Protecta® FR Coating or Protecta® FR Acrylic prior to fitting which will act as an adhesive and ensure a smoke tight seal.
5. All joints, gaps or imperfections in the installed seal must be filled with Protecta® FR Acrylic on both sides.
6. Protecta® FR Board can be over-painted with most emulsion or alkyd (gloss) paints.

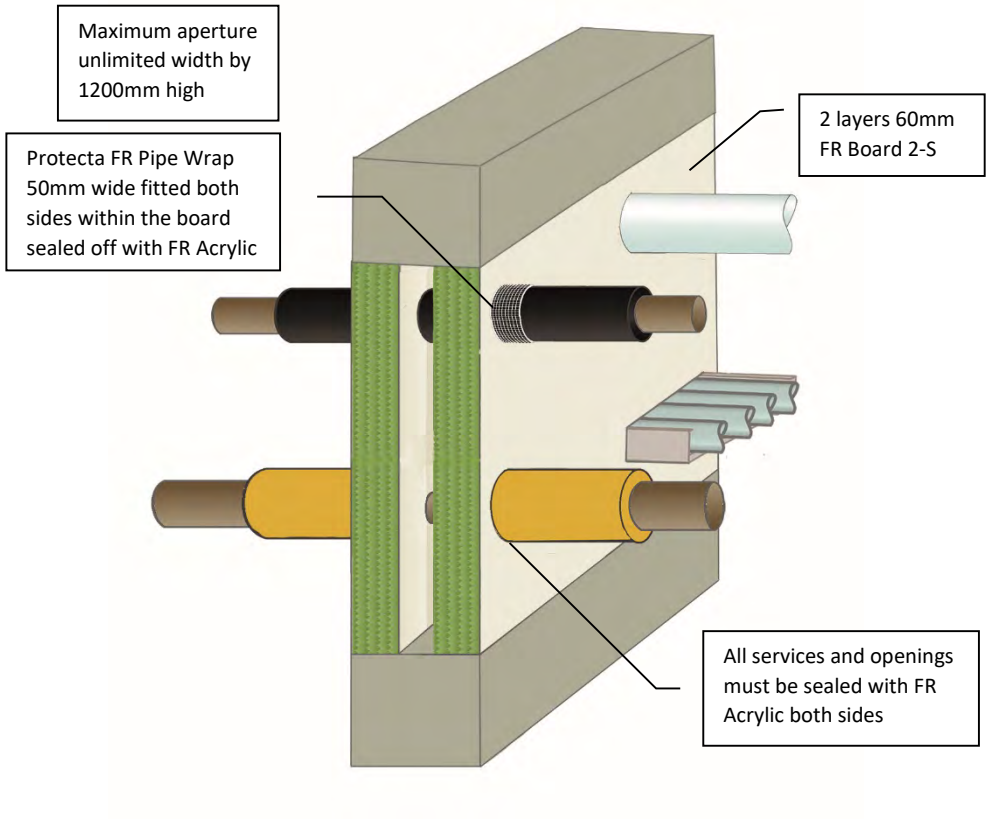

Products Protecta FR Board
Protecta FR Acrylic
Protecta FR Pipe Wrap

Construction Minimum wall thickness of 150 mm and comprise concrete, aerated concrete or masonry, with a density of ≥ 650 kg/m³

Services

1. Cables, with or without cable trays
2. Steel pipes
3. Copper pipes
4. Alupex pipes
5. Plastic pipes
6. Composite pipes
7. Conduits
8. Ventilation ducts

For full specification see pages 2 - 3.

Indoor air comfort test results

- French A+ – Complies
- BREEAM-NOR – Complies
- DIBt – Complies
- M1 Protocol – Complies

Durability

Y_1 - Intended for use at temperatures below 0°C with exposure to UV and humidity but no exposure to rain. Includes lower classes Y_2, Z_1 and Z_2.

Minimum separations and limitations

An aperture can include several services, and they may also be different. The minimum permitted separation between adjacent seals/apertures is 200mm. Services should be a minimum of 25mm from seal edges. Services within the system Protecta® FR Board seal do not require a minimum separation, except pipes where pipe insulation penetrates the seal and plastic pipe penetrations which should be a minimum of 30mm from other services in the aperture. The total amount of cross sections of services (including insulation) should not exceed 60% of the penetration area.

ETA 13/0673 & 18/0855

For all technical details on the products specified please refer to the technical data sheets that can be found on http://www.protecta.eu

Polyseam Ltd, 15 St Andrews Road, Huddersfield, West Yorkshire, HD1 6SB, United Kingdom
Tel: +44 (0) 1484 421 036

Scale: **NTS**

Drawn by & date: K.B. 16/3/19

Type of Services	Size of Services	Pipe wall thicknesses	Pipe Insulation	Pipe config	Pipe Wraps
Cables, single or bundled	≤ Ø21mm per cable	-	-	-	-
Cables in tied bundles and conduits on trays	≤ Ø21mm cables in bundles ≤ Ø100mm	-	-	-	-
	≤ Ø16mm PVC conduits	-	-	C/U	-
	≤ 200 mm ladders	-	-	-	-
	≤ 500 mm non perforated trays	-	-	-	-
Steel pipes	≤ Ø40mm per pipe	-	13mm thick continuous elastomeric or PE	U/U	1 layer of 50mm wide both sides
	≤ Ø324mm per pipe	-	20 - 80mm thick continuous stone wool ≥ 80kg/m^3	C/U	-
	≤ Ø40mm per pipe	-	≥ 20mm thick x 50cm long stone wool ≥ 80 kg/m^3 both sides	C/U	-
	≤ Ø219mm per pipe	-	≥ 30mm thick x 100cm long stone wool ≥ 80 kg/m^3 both sides	C/U	-
Copper pipes	≤ Ø12mm per pipe	-	9mm thick continuous elastomeric or PE	C/C	2 layers of 50mm wide both sides
	≤ Ø54mm per pipe	-	≥ 20mm thick x 50cm long stone wool ≥ 80 kg/m^3 both sides	C/C	-
	≤ Ø54mm per pipe	-	≥ 20mm thick x 100cm long stone wool ≥ 80 kg/m^3 both sides	C/U	-
Alupex pipes	≤ Ø20mm per pipe	-	None	C/C	-
	≤ Ø75mm per pipe	-	9 - 25mm thick continuous elastomeric or PE	C/C	2 layers of 50mm wide both sides
	≤ Ø16mm per pipe	-	≥ 20mm thick x 60cm long stone wool ≥ 80 kg/m^3 both sides	U/C	-
	≤ Ø75mm per pipe	-	≥ 30mm thick x 60cm long stone wool ≥ 80 kg/m^3 both sides	C/C	-
PVC-U & PVC-C pipes	≤ Ø40mm per pipe	1.9-3.0mm	-	U/U	1 layer of 50mm wide both sides
	≤ Ø110mm per pipe	2.7-6.6mm	-	U/C	2 layers of 50mm wide both sides
	≤ Ø125mm per pipe	4.7-7.4mm	-	U/C	4 layers of 50mm wide both sides
	≤ Ø160mm per pipe	4.0-9.5mm	-	U/C	6 layers of 50mm wide both sides
	≤ Ø200mm per pipe	5.0-10.2mm	-	C/C	10 layers of 75mm wide both sides
	≤ Ø250mm per pipe	6.0-11.0mm	-	C/C	10 layers of 75mm wide both sides
	≤ Ø315mm per pipe	7.7-12.1mm	-	C/C	10 layers of 75mm wide both sides
	≤ Ø400mm per pipe	9.8-15.3mm	-	C/C	16 layers of 75mm wide both sides

Type of Services	Size of Services	Pipe wall thicknesses	Pipe Insulation	Pipe config	Pipe Wraps
PE, ABS and SAN+PVC pipes	≤ Ø40mm per pipe	2.4-3.7mm	-	U/U	1 layer of 50mm wide both sides
	≤ Ø40mm per pipe	3.8-4.6mm	-	U/C	1 layer of 50mm wide both sides
	≤ Ø110mm per pipe	3.4-10.0mm	-	U/C	2 layers of 50mm wide both sides
	≤ Ø125mm per pipe	3.9-7.4mm	-	U/C	4 layers of 50mm wide both sides
	≤ Ø160mm per pipe	4.9-9.5mm	-	U/C	6 layers of 50mm wide both sides
PP pipes	≤ Ø40mm per pipe	1.8-5.5mm	-	U/U	1 layer of 50mm wide both sides
	≤ Ø110mm per pipe	2.7-10.0mm	-	C/C	2 layers of 50mm wide both sides
	≤ Ø125mm per pipe	3.1-11.4mm	-	C/C	4 layers of 50mm wide both sides
	≤ Ø160mm per pipe	4.9-14.6mm	-	C/C	6 layers of 50mm wide both sides
PEX pipe-in-pipes	≤ Ø54mm per pipe	-	-	C/C	2 layers of 50mm wide both sides
Geberit Silent-PP pipes	≤ Ø50mm per pipe	-	-	U/U	2 layers of 50mm wide both sides
	≤ Ø110mm per pipe	-	-	U/C	2 layers of 50mm wide both sides
Polo-Kal NG pipes	≤ Ø50mm per pipe	-	-	U/U	2 layers of 50mm wide both sides
	≤ Ø110mm per pipe	-	-	U/C	2 layers of 50mm wide both sides
	Ø125mm per pipe	-	-	U/C	4 layers of 50mm wide both sides
	Ø160mm per pipe	-	-	U/C	6 layers of 50mm wide both sides
Rehau Raupiano Plus pipes	≤ Ø50mm per pipe	-	-	U/U	2 layers of 50mm wide both sides
	≤ Ø110mm per pipe	-	-	U/C	2 layers of 50mm wide both sides
	Ø125mm per pipe	-	-	U/C	4 layers of 50mm wide both sides
	Ø160mm per pipe	-	-	U/C	6 layers of 50mm wide both sides
Ventilation ducts	≤ Ø400mm	-	≥ 30mm thick x 20cm long stonewool mat ≥80kg/m^3 both sides	-	Protecta FR Damper
	≤ 600mm high x 1000mm wide	-	≥ 30mm thick x 50cm long stonewool mat ≥80kg/m^3 both sides	-	Protecta FR Damper

MIXED SERVICE APERTURE
Fire Classification EI 60
Sound Reduction 48 dB

Installation details - Page 1 of 2

Installation Instructions

1. Ensure the faces of the aperture opening are free of dust and any other contaminants. The faces may be moistened for better adhesion.
2. Bare metal passing through the seal must be protected against corrosion using a suitable primer/protection system.
3. The seal can be positioned to either side of the construction or anywhere in between.
4. When installing Protecta® EX Mortar in hollow floor slabs or boards, level the fire seal with the soffit side. Ensure there is sufficient thickness of concrete below the void for the depth of mortar. Where this is not the case, tubular voids should be filled with stone wool normally the same thickness as the depth of the floor slab. Alternatively, simply fire seal on both sides.
5. Install a stone wool shutter board to achieve the required thickness of mortar. Make sure that this achieves a very tight seal – any small openings should be sealed with Protecta® FR Acrylic
6. Pour clean water into a suitable mixing vessel and pour enough mortar to obtain the required consistency. Mix well to avoid lumps. Always add the mortar to the water, do not reverse this mixing process.
7. Once the desired consistency is achieved pour or trowel the mortar onto the shutter board making sure that it flows into all corners and around services. Apply a firm pressure to the mortar to eliminate any trapped air bubbles. Build up to the required depth.

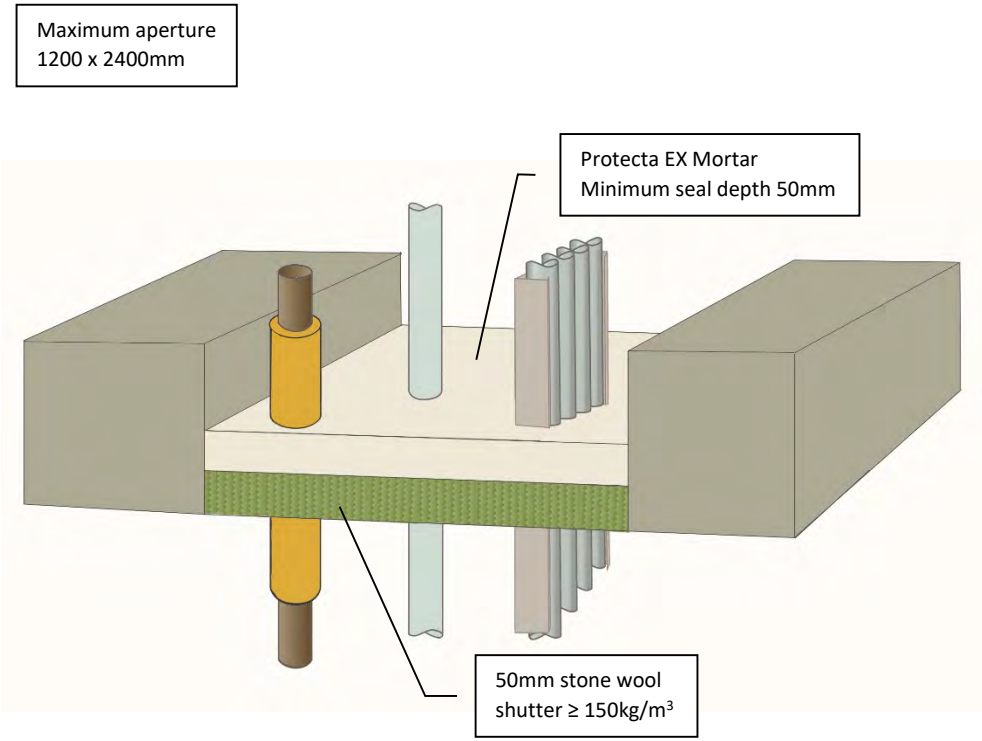

Products Protecta EX Mortar
Stone wool shutter

Construction Minimum floor thickness of 150 mm and comprise aerated concrete or concrete with a minimum density of 650kg/m³

Services

1. Cables and cable trays
2. Steel pipes
3. Copper pipes
4. Alupex pipes
5. Plastic pipes

For full specification see page 2.

Indoor air comfort test results

- EMICODE EC 1^{PLUS} – Complies
- BREEAM-NOR – Complies
- DIBt – Complies
- LEED – Complies

Durability

Z_2 - Intended for use in internal conditions with humidity classes other than Z_1, excluding temperatures below 0 °C.

Minimum separations and limitations
An aperture can include several services, and they may also be different. The minimum permitted separation between adjacent seals/apertures is 200mm. Services should be a minimum of 30mm from seal edges. Services within the seal do not require a minimum separation, except pipes where combustible pipe insulation penetrates the seal and plastic pipe penetrations which should be a minimum of 30mm from other services in the aperture. The total amount of cross sections of services (including insulation) should not exceed 60% of the penetration area.

ETA 13/0672 & 18/0855

For all technical details on the products specified please refer to the technical data sheets that can be found on http://www.protecta.eu

Polyseam Ltd, 15 St Andrews Road, Huddersfield, West Yorkshire, HD1 6SB, United Kingdom
Tel: +44 (0) 1484 421 036

Scale: **NTS**

Drawn by & date: K.B. 17/3/19

Type of Services	Size of Services	Pipe wall thicknesses	Pipe Insulation	Pipe config	Pipe Wraps
Cables, with or without trays or ladders	≤ Ø21mm cables single or bundled	-	-	-	-
	≤ Ø16mm PVC conduits	-	-	C/U	-
	≤ Ø17mm unsheathed cables/wires	-	-	-	-
Steel pipes	≤ Ø16mm per pipe	-	None	C/U	-
	≤ Ø324mm per pipe	-	20 - 80mm thick continuous stone wool ≥ 80kg/m^3	C/U	-
	≤ Ø40mm per pipe	-	≥ 20mm thick x 100cm long stone wool ≥ 80 kg/m^3 both sides	C/U	-
	≤ Ø219mm per pipe	-	≥ 30mm thick x 100cm long stone wool ≥ 80 kg/m^3 both sides	C/U	-
Copper pipes	Ø6mm per pipe	-	None	C/C	-
	≤ Ø54mm per pipe	-	20 - 80mm thick continuous stone wool ≥ 80kg/m^3	C/C	-
	≤ Ø54mm per pipe	-	≥ 20mm thick x 100cm long stone wool ≥ 80 kg/m^3 both sides	C/C	-
Alupex pipes	≤ Ø20mm per pipe	-	None	C/C	-
	≤ Ø75mm per pipe	-	≥ 20mm thick x 50cm long stone wool ≥ 80 kg/m^3 both sides	C/C	-
PVC-U and PVC-C pipes	≤ Ø40mm per pipe	1.6-3.0mm	-	U/C	None
PEX pipe-in-pipes	≤ Ø25mm per pipe	-	-	C/C	None

MIXED SERVICE APERTURE

Fire Classification E 120

Sound Reduction 48 dB

Installation details - Page 1 of 2

Installation Instructions

1. Ensure the faces of the aperture opening are free of dust and any other contaminants. The faces may be moistened for better adhesion.
2. Bare metal passing through the seal must be protected against corrosion using a suitable primer/protection system.
3. The seal can be positioned to either side of the construction or anywhere in between.
4. When installing Protecta® EX Mortar in hollow floor slabs or boards, level the fire seal with the soffit side. Ensure there is sufficient thickness of concrete below the void for the depth of mortar. Where this is not the case, tubular voids should be filled with stone wool normally the same thickness as the depth of the floor slab. Alternatively, simply fire seal on both sides.
5. Install a stone wool shutter board to achieve the required thickness of mortar. Make sure that this achieves a very tight seal – any small openings should be sealed with Protecta® FR Acrylic
6. Pour clean water into a suitable mixing vessel and pour enough mortar to obtain the required consistency. Mix well to avoid lumps. Always add the mortar to the water, do not reverse this mixing process.
7. Once the desired consistency is achieved pour or trowel the mortar onto the shutter board making sure that it flows into all corners and around services. Apply a firm pressure to the mortar to eliminate any trapped air bubbles. Build up to the required depth.

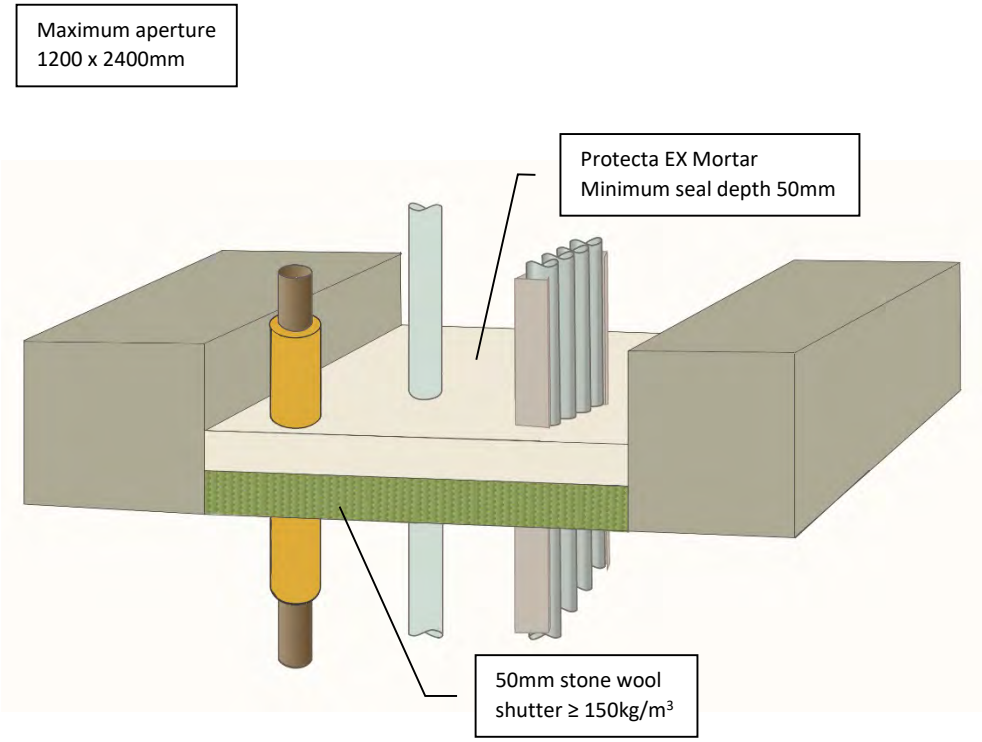

Products Protecta EX Mortar
Stone wool shutter

Construction Minimum floor thickness of 150 mm and comprise aerated concrete or concrete with a minimum density of 650kg/m³

Services

1. Cables and cable trays
2. Steel pipes
3. Copper pipes
4. Alupex pipes
5. Plastic pipes

For full specification see page 2.

Indoor air comfort test results

- EMICODE EC 1PLUS – Complies
- BREEAM-NOR – Complies
- DIBt – Complies
- LEED – Complies

Durability

Z_2 - Intended for use in internal conditions with humidity classes other than Z_1, excluding temperatures below 0 °C.

Minimum separations and limitations

An aperture can include several services, and they may also be different. The minimum permitted separation between adjacent seals/apertures is 200mm. Services should be a minimum of 30mm from seal edges. Services within the seal do not require a minimum separation, except pipes where combustible pipe insulation penetrates the seal and plastic pipe penetrations which should be a minimum of 30mm from other services in the aperture. The total amount of cross sections of services (including insulation) should not exceed 60% of the penetration area.

ETA 13/0672 & 18/0855

For all technical details on the products specified please refer to the technical data sheets that can be found on http://www.protecta.eu

Polyseam Ltd, 15 St Andrews Road, Huddersfield, West Yorkshire, HD1 6SB, United Kingdom
Tel: +44 (0) 1484 421 036

Scale: **NTS**

Drawn by & date: K.B. 17/3/19

Type of Services	Size of Services	Pipe wall thicknesses	Pipe Insulation	Pipe config	Pipe Wraps
Cables, with or without trays	≤ Ø21mm cables single or bundled	-	-	-	-
	≤ Ø16mm PVC conduits	-	-	C/U	-
	≤ Ø24mm unsheathed cables/wires	-	-	-	-
Steel pipes	≤ Ø16mm per pipe	-	None	C/U	-
	≤ Ø324mm per pipe	-	20 - 80mm thick continuous stone wool ≥ 80kg/m^3	C/U	-
	≤ Ø40mm per pipe	-	≥ 20mm thick x 100cm long stone wool ≥ 80 kg/m^3 both sides	C/U	-
	≤ Ø219mm per pipe	-	≥ 30mm thick x 100cm long stone wool ≥ 80 kg/m^3 both sides	C/U	-
Copper pipes	≤ Ø15mm per pipe	-	None	C/C	-
	≤ Ø54mm per pipe	-	20 - 80mm thick continuous stone wool ≥ 80kg/m^3	C/C	-
	≤ Ø54mm per pipe	-	≥ 20mm thick x 100cm long stone wool ≥ 80 kg/m^3 both sides	C/C	-
Alupex pipes	≤ Ø20mm per pipe	-	None	C/C	-
	≤ Ø75mm per pipe	-	≥ 20mm thick x 50cm long stone wool ≥ 80 kg/m^3 both sides	C/C	-
PVC-U and PVC-C pipes	≤ Ø40mm per pipe	1.6-3.0mm	-	U/C	None
PEX pipe-in-pipes	≤ Ø25mm per pipe	-	-	C/C	None

MIXED SERVICE APERTURE
Fire Classification EI 60
Sound Reduction 48 dB

Installation details - Page 1 of 4

Installation Instructions

1. Ensure the faces of the aperture opening are free of dust and any other contaminants. The faces may be moistened for better adhesion.
2. Bare metal passing through the seal must be protected against corrosion using a suitable primer/protection system.
3. The seal can be positioned to either side of the construction or anywhere in between.
4. When installing Protecta® EX Mortar in hollow floor slabs or boards, level the fire seal with the soffit side. Ensure there is sufficient thickness of concrete below the void for the depth of mortar. Where this is not the case, tubular voids should be filled with stone wool normally the same thickness as the depth of the floor slab. Alternatively, simply fire seal on both sides.
5. Install a shutter board to achieve the required thickness of mortar. Make sure that this achieves a very tight seal.
6. Pour clean water into a suitable mixing vessel and pour enough mortar to obtain the required consistency. Mix well to avoid lumps. Always add the mortar to the water, do not reverse this mixing process.
7. Once the desired consistency is achieved pour or trowel the mortar onto the shutter board making sure that it flows into all corners and around services. Apply a firm pressure to the mortar to eliminate any trapped air bubbles. Build up to the required depth.

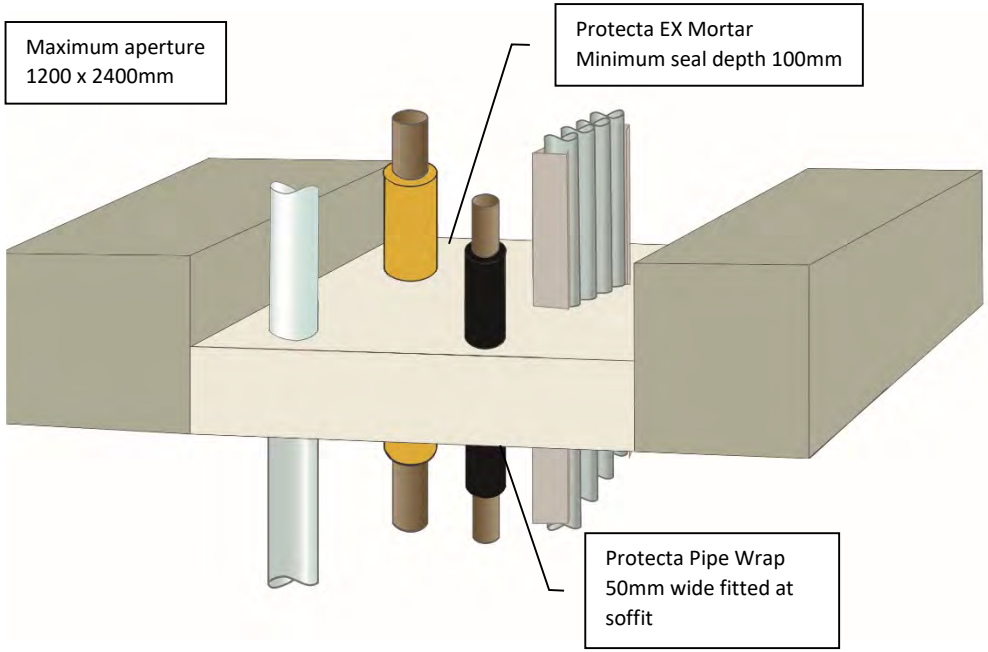

Loadbearing Properties

Soft body impact, serviceability 500Nm. Soft body impact, safety in use 700Nm. Hard body impact serviceability 6Nm. Hard body impact, safety in use 10Nm. Concentrated load to 15kN on size up to 1500mm x1000mm (no failure), 4.85kN on sizes up to 1200mm x 2400mm.

Minimum separations and limitations

An aperture can include several services, and they may also be different. The minimum permitted separation between adjacent seals/apertures is 200mm. Services should be a minimum of 30mm from seal edges. Services within the seal do not require a minimum separation, except pipes where combustible pipe insulation penetrates the seal and plastic pipe penetrations which should be a minimum of 30mm from other services in the aperture. The total amount of cross sections of services (including insulation) should not exceed 60% of the penetration area.

Products Protecta EX Mortar
Protecta FR Pipe Wrap

Construction Minimum floor thickness of 150 mm and comprise aerated concrete or concrete with a minimum density of 650kg/m^3

Services

1. Cables, with or without cable trays
2. Steel pipes
3. Copper pipes
4. Alupex pipes
5. Plastic pipes
6. Composite pipes
7. Conduits
8. Ventilation ducts

For full specification see pages 2 - 4.

Indoor air comfort test results

- EMICODE EC 1^{PLUS} – Complies
- BREEAM-NOR – Complies
- DIBt – Complies
- LEED – Complies

Durability

Z_2 - Intended for use in internal conditions with humidity classes other than Z_1, excluding temperatures below 0 °C.

ETA 13/0672 & 18/0855

For all technical details on the products specified please refer to the technical data sheets that can be found on http://www.protecta.eu

Polyseam Ltd, 15 St Andrews Road, Huddersfield, West Yorkshire, HD1 6SB, United Kingdom
Tel: +44 (0) 1484 421 036

NTS	K.B. 17/3/19

Type of Services	Size of Services	Pipe wall thicknesses	Pipe Insulation	Pipe config	Pipe Wraps
Cables, with or without trays or ladders	≤ Ø80mm cables single or bundled	-	-	-	-
	≤ Ø16mm PVC conduits	-	-	C/U	-
	≤ Ø17mm unsheathed cables/wires	-	-	-	-
Steel pipes	≤ Ø16mm per pipe	-	None	C/U	-
	≤ Ø40mm per pipe	-	13mm thick continuous elastomeric or phenolic	C/U	1 layer of 50mm wide soffit side
	≤ Ø40mm per pipe	-	14 - 25mm thick continuous elastomeric or phenolic	C/U	2 layers of 50mm wide soffit side
	≤ Ø165mm per pipe	-	14 - 19mm thick continuous elastomeric or phenolic	C/U	1 layer of 50mm wide soffit side
	≤ Ø324mm per pipe	-	25mm thick continuous elastomeric or phenolic	C/U	2 layers of 50mm wide soffit side
	≤ Ø324mm per pipe	-	26 - 50mm thick continuous elastomeric or phenolic	C/U	3 layers of 50mm wide soffit side
	≤ Ø324mm per pipe	-	20 - 80mm thick continuous stone wool ≥ 80kg/m^3	C/U	-
	≤ Ø40mm per pipe	-	≥ 20mm thick x 100cm long stone wool ≥ 80 kg/m^3 both sides	C/U	-
	≤ Ø219mm per pipe	-	≥ 30mm thick x 100cm long stone wool ≥ 80 kg/m^3 both sides	C/U	-
Copper pipes	Ø6mm per pipe	-	None	C/C	-
	≤ Ø12mm per pipe	-	9mm thick continuous elastomeric or phenolic	C/C	2 layers of 50mm wide soffit side
	≤ Ø54mm per pipe	-	13 - 25mm thick continuous elastomeric or phenolic	C/C	2 layers of 50mm wide soffit side
	≤ Ø54mm per pipe	-	20 - 80mm thick continuous stone wool ≥ 80kg/m^3	C/C	-
	≤ Ø54mm per pipe	-	≥ 20mm thick x 100cm long stone wool ≥ 80 kg/m^3 both sides	C/C	-
Alupex pipes	≤ Ø20mm per pipe	-	None	C/C	-
	≤ Ø75mm per pipe	-	9 - 25mm thick continuous elastomeric or phenolic	C/C	2 layers of 50mm wide soffit side
	≤ Ø75mm per pipe	-	≥ 20mm thick x 50cm long stone wool ≥ 80 kg/m^3 both sides	C/C	-

Type of Services	Size of Services	Pipe wall thicknesses	Pipe Insulation	Pipe config	Pipe Wraps
PVC-U and PVC-C pipes	≤ Ø40mm per pipe	1.6-3.0mm	-	U/C	None
	≤ Ø40mm per pipe	1.8-3.7mm	-	U/U	1 layer of 50mm wide soffit side
	≤ Ø110mm per pipe	1.9-6.6mm	-	U/C	2 layers of 50mm wide soffit side
	≤ Ø125mm per pipe	3.5-7.4mm	-	U/C	4 layers of 50mm wide soffit side
	≤ Ø160mm per pipe	4.5-9.5mm	-	C/C	6 layers of 50mm wide soffit side
	≤ Ø160mm per pipe	9.5mm	-	U/C	6 layers of 50mm wide soffit side
PE, ABS and SAN+PVC pipes	≤ Ø40mm per pipe	1.8-4.4mm	-	U/C	None
	≤ Ø40mm per pipe	2.4-3.7mm	-	U/U	1 layer of 50mm wide soffit side
	≤ Ø110mm per pipe	2.5-10.0mm	-	U/C	2 layers of 50mm wide soffit side
	≤ Ø125mm per pipe	3.9-11.4mm	-	U/C	4 layers of 50mm wide soffit side
	≤ Ø160mm per pipe	4.9-14.6mm	-	U/C	6 layers of 50mm wide soffit side
	≤ Ø250mm per pipe	7.8mm	-	C/C	7 layers of 75mm wide soffit side
PP pipes	≤ Ø40mm per pipe	1.8-4.4mm	-	U/C	None
	≤ Ø40mm per pipe	1.8-5.5mm	-	U/U	1 layer of 50mm wide soffit side
	≤ Ø110mm per pipe	1.9-6.3mm	-	U/C	2 layers of 50mm wide soffit side
	≤ Ø125mm per pipe	3.4-11.4mm	-	U/C	4 layers of 50mm wide soffit side
	≤ Ø160mm per pipe	4.9-14.6mm	-	U/C	6 layers of 50mm wide soffit side
PEX pipe-in-pipes	≤ Ø25mm per pipe	-	-	C/C	None
	≤ Ø54mm per pipe	-	-	C/C	2 layers of 50mm wide soffit side
Aquatherm Green SDR9 pipes	Ø32mm per pipe	-	-	C/C	1 layer of 50mm wide soffit side
	≤ Ø110mm per pipe	-	-	C/C	2 layers of 50mm wide soffit side
Geberit Silent-PP pipes	≤ Ø50mm per pipe	-	-	U/U	2 layers of 50mm wide soffit side
	≤ Ø110mm per pipe	-	-	U/C	2 layers of 50mm wide soffit side

Type of Services	Size of Services	Pipe wall thicknesses	Pipe Insulation	Pipe config	Pipe Wraps
Polo-Kal NG pipes	≤ Ø110mm per pipe	-	-	U/C	2 layers of 50mm wide soffit side
	Ø125mm per pipe	-	-	U/C	4 layers of 50mm wide soffit side
	Ø160mm per pipe	-	-	U/C	6 layers of 50mm wide soffit side
Rehau Raupiano Plus pipes	≤ Ø50mm per pipe	-	-	U/U	2 layers of 50mm wide soffit side
	≤ Ø110mm per pipe	-	-	U/C	2 layers of 50mm wide soffit side
	Ø125mm per pipe	-	-	U/C	4 layers of 50mm wide soffit side
	Ø160mm per pipe	-	-	U/C	6 layers of 50mm wide soffit side
Wavin SiTech pipes	≤ Ø50mm per pipe	-	-	U/U	2 layers of 50mm wide soffit side
	≤ Ø110mm per pipe	-	-	U/C	2 layers of 50mm wide soffit side
Conduits of PVC-U & PVC-C pipes	≤ Ø110mm w/cables ≤ Ø14mm	2.7-6.6mm	-	U/C	2 layers of 50mm wide soffit side
Conduits of PE, ABS & SAN+PVC pipes	≤ Ø110mm w/cables ≤ Ø14mm	2.7-10.0mm	-	U/C	2 layers of 50mm wide soffit side
Conduits of PP pipe	≤ Ø110mm w/cables ≤ Ø14mm	3.4-6.3mm	-	U/C	2 layers of 50mm wide soffit side
Ventilation ducts	≤ Ø400mm	-	≥ 30mm thick x 15cm long stonewool mat ≥80kg/m^3 top side	-	Protecta FR Damper
	≤ Ø1000mm	-	≥ 30mm thick x 50cm long stonewool mat ≥80kg/m^3 top side	-	Protecta FR Damper
	≤ 1000 x 1000mm	-	≥ 30mm thick x 50cm long stonewool mat ≥80kg/m^3 top side	-	Protecta FR Damper

MIXED SERVICE APERTURE
Fire Classification EI 120
Sound Reduction 48 dB

Installation details - Page 1 of 4

Installation Instructions

1. Ensure the faces of the aperture opening are free of dust and any other contaminants. The faces may be moistened for better adhesion.
2. Bare metal passing through the seal must be protected against corrosion using a suitable primer/protection system.
3. The seal can be positioned to either side of the construction or anywhere in between.
4. When installing Protecta® EX Mortar in hollow floor slabs or boards, level the fire seal with the soffit side. Ensure there is sufficient thickness of concrete below the void for the depth of mortar. Where this is not the case, tubular voids should be filled with stone wool normally the same thickness as the depth of the floor slab. Alternatively, simply fire seal on both sides.
5. Install a shutter board to achieve the required thickness of mortar. Make sure that this achieves a very tight seal.
6. Pour clean water into a suitable mixing vessel and pour enough mortar to obtain the required consistency. Mix well to avoid lumps. Always add the mortar to the water, do not reverse this mixing process.
7. Once the desired consistency is achieved pour or trowel the mortar onto the shutter board making sure that it flows into all corners and around services. Apply a firm pressure to the mortar to eliminate any trapped air bubbles. Build up to the required depth.

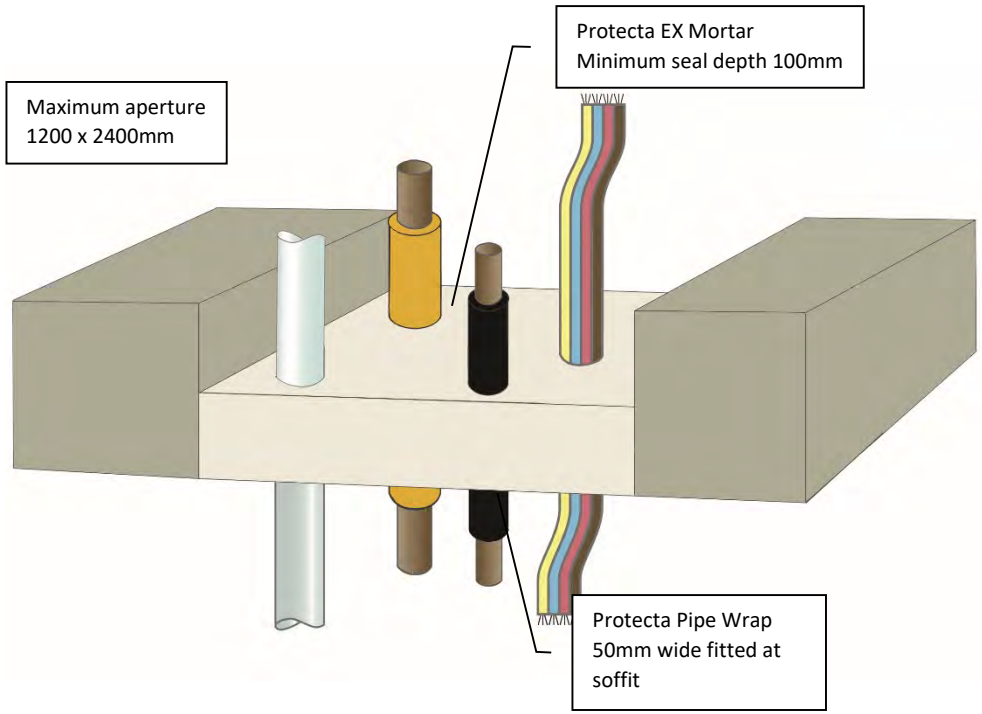

Loadbearing Properties

Soft body impact, serviceability 500Nm. Soft body impact, safety in use 700Nm. Hard body impact serviceability 6Nm. Hard body impact, safety in use 10Nm. Concentrated load to 15kN on size up to 1500mm x1000mm (no failure), 4.85kN on sizes up to 1200mm x 2400mm.

Minimum separations and limitations

An aperture can include several services, and they may also be different. The minimum permitted separation between adjacent seals/apertures is 200mm. Services should be a minimum of 30mm from seal edges. Services within the seal do not require a minimum separation, except pipes where combustible pipe insulation penetrates the seal and plastic pipe penetrations which should be a minimum of 30mm from other services in the aperture. The total amount of cross sections of services (including insulation) should not exceed 60% of the penetration area.

ETA 13/0672 & 18/0855

Products	Protecta EX Mortar Protecta FR Pipe Wrap
Construction	Minimum floor thickness of 150 mm and comprise aerated concrete or concrete with a minimum density of 650kg/m³

Services

1. Cables
2. Steel pipes
3. Copper pipes
4. Alupex pipes
5. Plastic pipes
6. Composite pipes
7. Conduits
8. Ventilation ducts

For full specification see pages 2 - 4.

Indoor air comfort test results

- EMICODE EC 1PLUS – Complies
- BREEAM-NOR – Complies
- DIBt – Complies
- LEED – Complies

Durability

Z_2 - Intended for use in internal conditions with humidity classes other than Z_1, excluding temperatures below 0 °C.

For all technical details on the products specified please refer to the technical data sheets that can be found on http://www.protecta.eu

Polyseam Ltd, 15 St Andrews Road, Huddersfield, West Yorkshire, HD1 6SB, United Kingdom
Tel: +44 (0) 1484 421 036

Scale:	Drawn by & date:
NTS	K.B. 17/3/19

Type of Services	Size of Services	Pipe wall thicknesses	Pipe Insulation	Pipe config	Pipe Wraps
Cables in tied bundles	≤ Ø21mm cables in bundles ≤ Ø100mm	-	-	-	-
	≤ Ø16mm PVC conduits	-	-	C/U	-
Steel pipes	≤ Ø16mm per pipe	-	None	C/U	-
	≤ Ø40mm per pipe	-	13mm thick continuous elastomeric or phenolic	C/U	1 layer of 50mm wide soffit side
	≤ Ø40mm per pipe	-	14 - 25mm thick continuous elastomeric or phenolic	C/U	2 layers of 50mm wide soffit side
	≤ Ø165mm per pipe	-	14 - 19mm thick continuous elastomeric or phenolic	C/U	1 layer of 50mm wide soffit side
	≤ Ø324mm per pipe	-	25mm thick continuous elastomeric or phenolic	C/U	2 layers of 50mm wide soffit side
	≤ Ø324mm per pipe	-	26 - 50mm thick continuous elastomeric or phenolic	C/U	3 layers of 50mm wide soffit side
	≤ Ø324mm per pipe	-	20 - 80mm thick continuous stone wool ≥ 80kg/m^3	C/U	-
	≤ Ø40mm per pipe	-	≥ 20mm thick x 100cm long stone wool ≥ 80 kg/m^3 both sides	C/U	-
	≤ Ø219mm per pipe	-	≥ 30mm thick x 100cm long stone wool ≥ 80 kg/m^3 both sides	C/U	-
Copper pipes	Ø6mm per pipe	-	None	C/C	-
	≤ Ø12mm per pipe	-	9mm thick continuous elastomeric or phenolic	C/C	2 layers of 50mm wide soffit side
	≤ Ø54mm per pipe	-	20 - 80mm thick continuous stone wool ≥ 80kg/m^3	C/C	-
	≤ Ø54mm per pipe	-	≥ 20mm thick x 100cm long stone wool ≥ 80 kg/m^3 both sides	C/C	-
Alupex pipes	≤ Ø20mm per pipe	-	None	C/C	-
	≤ Ø16mm per pipe	-	9mm thick continuous elastomeric or phenolic	C/C	2 layers of 50mm wide soffit side
	≤ Ø75mm per pipe	-	≥ 20mm thick x 50cm long stone wool ≥ 80 kg/m^3 both sides	C/C	-

Type of Services	Size of Services	Pipe wall thicknesses	Pipe Insulation	Pipe config	Pipe Wraps
PVC-U and PVC-C pipes	≤ Ø40mm per pipe	1.6-3.0mm	-	U/C	None
	≤ Ø40mm per pipe	1.8-3.7mm	-	U/U	1 layer of 50mm wide soffit side
	≤ Ø110mm per pipe	1.9-6.6mm	-	U/C	2 layers of 50mm wide soffit side
	≤ Ø125mm per pipe	3.5-7.4mm	-	U/C	4 layers of 50mm wide soffit side
	≤ Ø160mm per pipe	4.5mm	-	C/C	6 layers of 50mm wide soffit side
PE, ABS and SAN+PVC pipes	≤ Ø40mm per pipe	1.8-4.4mm	-	U/C	None
	≤ Ø40mm per pipe	2.4-3.7mm	-	U/U	1 layer of 50mm wide soffit side
	≤ Ø110mm per pipe	2.5-10.0mm	-	U/C	2 layers of 50mm wide soffit side
	≤ Ø125mm per pipe	3.9-11.4mm	-	U/C	4 layers of 50mm wide soffit side
	≤ Ø160mm per pipe	4.9-14.6mm	-	U/C	6 layers of 50mm wide soffit side
	≤ Ø250mm per pipe	7.8mm	-	C/C	7 layers of 75mm wide soffit side
PP pipes	≤ Ø40mm per pipe	1.8-4.4mm	-	U/C	None
	≤ Ø40mm per pipe	1.8-5.5mm	-	U/U	1 layer of 50mm wide soffit side
	≤ Ø110mm per pipe	1.9-6.3mm	-	U/C	2 layers of 50mm wide soffit side
	≤ Ø125mm per pipe	3.4-11.4mm	-	U/C	4 layers of 50mm wide soffit side
	≤ Ø160mm per pipe	4.9-14.6mm	-	U/C	6 layers of 50mm wide soffit side
PEX pipe-in-pipes	≤ Ø25mm per pipe	-	-	C/C	None
	≤ Ø54mm per pipe	-	-	C/C	2 layers of 50mm wide soffit side
Aquatherm Green SDR9 pipes	Ø32mm per pipe	-	-	C/C	1 layer of 50mm wide soffit side
	≤ Ø110mm per pipe	-	-	C/C	2 layers of 50mm wide soffit side
Geberit Silent-PP pipes	≤ Ø50mm per pipe	-	-	U/U	2 layers of 50mm wide soffit side
	≤ Ø110mm per pipe	-	-	U/C	2 layers of 50mm wide soffit side

Type of Services	Size of Services	Pipe wall thicknesses	Pipe Insulation	Pipe config	Pipe Wraps
Polo-Kal NG pipes	≤ Ø110mm per pipe	-	-	U/C	2 layers of 50mm wide soffit side
	Ø125mm per pipe	-	-	U/C	4 layers of 50mm wide soffit side
	Ø160mm per pipe	-	-	U/C	6 layers of 50mm wide soffit side
Rehau Raupiano Plus pipes	≤ Ø50mm per pipe	-	-	U/U	2 layers of 50mm wide soffit side
	≤ Ø110mm per pipe	-	-	U/C	2 layers of 50mm wide soffit side
	Ø125mm per pipe	-	-	U/C	4 layers of 50mm wide soffit side
	Ø160mm per pipe	-	-	U/C	6 layers of 50mm wide soffit side
Wavin SiTech pipes	≤ Ø50mm per pipe	-	-	U/U	2 layers of 50mm wide soffit side
	≤ Ø110mm per pipe	-	-	U/C	2 layers of 50mm wide soffit side
Conduits of PVC-U & PVC-C pipes	≤ Ø110mm w/cables ≤ Ø14mm	2.7-6.6mm	-	U/C	2 layers of 50mm wide soffit side
Ventilation ducts	≤ Ø400mm	-	≥ 30mm thick x 15cm long stonewool mat ≥80kg/m^3 top side	-	Protecta FR Damper

MIXED SERVICE APERTURE
Fire Classification EI 120
Sound Reduction 48 dB

Installation details - Page 1 of 5

Installation Instructions

1. Ensure the faces of the aperture opening are free of dust and any other contaminants. The faces may be moistened for better adhesion.
2. Bare metal passing through the seal must be protected against corrosion using a suitable primer/protection system.
3. The seal can be positioned to either side of the construction or anywhere in between.
4. When installing Protecta® EX Mortar in hollow floor slabs or boards, level the fire seal with the soffit side. Ensure there is sufficient thickness of concrete below the void for the depth of mortar. Where this is not the case, tubular voids should be filled with stone wool normally the same thickness as the depth of the floor slab. Alternatively, simply fire seal on both sides.
5. Install a shutter board to achieve the required thickness of mortar. Make sure that this achieves a very tight seal.
6. Pour clean water into a suitable mixing vessel and pour enough mortar to obtain the required consistency. Mix well to avoid lumps. Always add the mortar to the water, do not reverse this mixing process.
7. Once the desired consistency is achieved pour or trowel the mortar onto the shutter board making sure that it flows into all corners and around services. Apply a firm pressure to the mortar to eliminate any trapped air bubbles. Build up to the required depth.

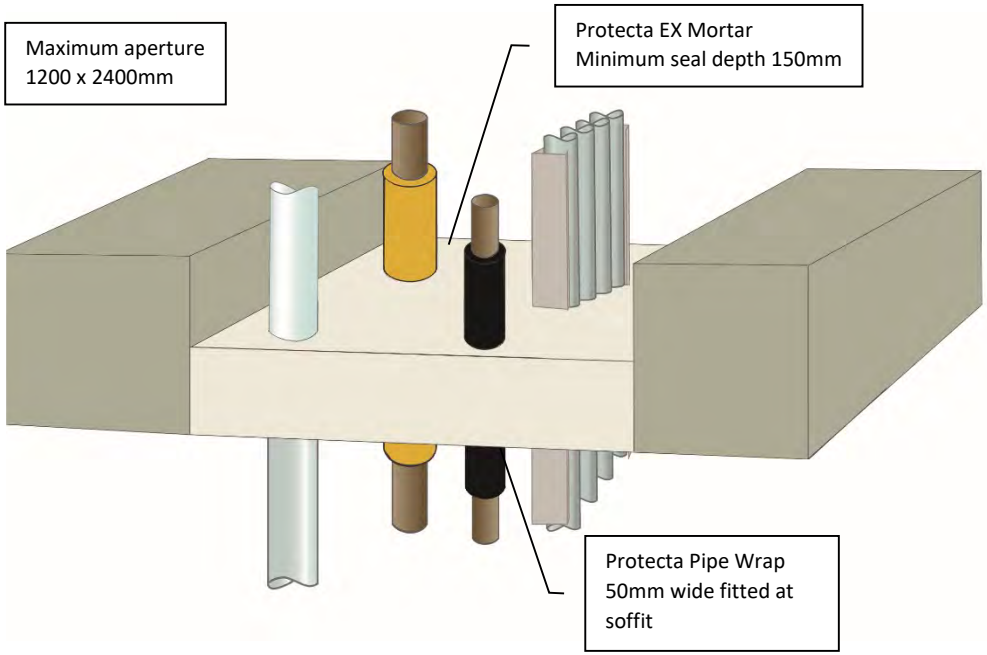

Loadbearing Properties

Soft body impact, serviceability 500Nm. Soft body impact, safety in use 700Nm. Hard body impact serviceability 6Nm. Hard body impact, safety in use 10Nm. Concentrated load to 15kN on size up to 1500mm x1000mm (no failure), 4.85kN on sizes up to 1200mm x 2400mm.

Minimum separations and limitations

An aperture can include several services, and they may also be different. The minimum permitted separation between adjacent seals/apertures is 200mm. Services should be a minimum of 30mm from seal edges. Services within the seal do not require a minimum separation, except pipes where combustible pipe insulation penetrates the seal and plastic pipe penetrations which should be a minimum of 30mm from other services in the aperture. The total amount of cross sections of services (including insulation) should not exceed 60% of the penetration area.

Products	Protecta EX Mortar Protecta FR Pipe Wrap
Construction	Minimum floor thickness of 150 mm and comprise aerated concrete or concrete with a minimum density of 650kg/m^3

Services

1. Cables, with or without cable trays
2. Steel pipes
3. Copper pipes
4. Alupex pipes
5. Plastic pipes
6. Composite pipes
7. Conduits
8. Ventilation ducts

For full specification see pages 2 - 5.

Indoor air comfort test results

- EMICODE EC 1^{PLUS} – Complies
- BREEAM-NOR – Complies
- DIBt – Complies
- LEED – Complies

Durability

Z_2 - Intended for use in internal conditions with humidity classes other than Z_1, excluding temperatures below 0 °C.

ETA 13/0672 & 18/0855

For all technical details on the products specified please refer to the technical data sheets that can be found on http://www.protecta.eu

Polyseam Ltd, 15 St Andrews Road, Huddersfield, West Yorkshire, HD1 6SB, United Kingdom
Tel: +44 (0) 1484 421 036

NTS	K.B. 17/3/19

Type of Services	Size of Services	Pipe wall thicknesses	Pipe Insulation	Pipe config	Pipe Wraps
Cables, with or without trays or ladders	≤ Ø21mm cables single or bundled	-	-	-	-
	≤ Ø16mm PVC conduits	-	-	C/U	-
	≤ Ø24mm unsheathed cables/wires	-	-	-	-
	≤ 500mm wide trays or ladders	-	-	-	-
Steel pipes	≤ Ø16mm per pipe	-	None	C/U	-
	≤ Ø40mm per pipe	-	13mm thick continuous elastomeric or phenolic	C/U	1 layer of 50mm wide soffit side
	≤ Ø40mm per pipe	-	14 - 25mm thick continuous elastomeric or phenolic	C/U	2 layers of 50mm wide soffit side
	≤ Ø165mm per pipe	-	14 - 19mm thick continuous elastomeric or phenolic	C/U	1 layer of 50mm wide soffit side
	≤ Ø324mm per pipe	-	25mm thick continuous elastomeric or phenolic	C/U	2 layers of 50mm wide soffit side
	≤ Ø324mm per pipe	-	26 - 50mm thick continuous elastomeric or phenolic	C/U	3 layers of 50mm wide soffit side
	≤ Ø324mm per pipe	-	20 - 80mm thick continuous stone wool ≥ 80kg/m^3	C/U	-
	≤ Ø40mm per pipe	-	≥ 20mm thick x 100cm long stone wool ≥ 80 kg/m^3 both sides	C/U	-
	≤ Ø219mm per pipe	-	≥ 30mm thick x 100cm long stone wool ≥ 80 kg/m^3 both sides	C/U	-
Copper pipes	Ø6mm per pipe	-	None	C/C	-
	≤ Ø12mm per pipe	-	9mm thick continuous elastomeric or phenolic	C/C	2 layers of 50mm wide soffit side
	≤ Ø54mm per pipe	-	20 - 80mm thick continuous stone wool ≥ 80kg/m^3	C/C	-
	≤ Ø54mm per pipe	-	≥ 20mm thick x 100cm long stone wool ≥ 80 kg/m^3 both sides	C/C	-
Alupex pipes	≤ Ø20mm per pipe	-	None	C/C	-
	≤ Ø16mm per pipe	-	9mm thick continuous elastomeric or phenolic	C/C	2 layers of 50mm wide soffit side
	≤ Ø75mm per pipe	-	≥ 20mm thick x 50cm long stone wool ≥ 80 kg/m^3 both sides	C/C	-

Type of Services	Size of Services	Pipe wall thicknesses	Pipe Insulation	Pipe config	Pipe Wraps
PVC-U and PVC-C pipes	≤ Ø40mm per pipe	1.6-3.0mm	-	U/C	None
	≤ Ø40mm per pipe	1.8-3.7mm	-	U/U	1 layer of 50mm wide soffit side
	≤ Ø110mm per pipe	1.9-6.6mm	-	U/C	2 layers of 50mm wide soffit side
	≤ Ø125mm per pipe	3.5-7.4mm	-	U/C	4 layers of 50mm wide soffit side
	≤ Ø160mm per pipe	4.5-9.5mm	-	U/C	6 layers of 50mm wide soffit side
	Ø 315mm per pipe	7.7mm		C/C	10 layers of 75mm wide soffit side
PE, ABS and SAN+PVC pipes	≤ Ø40mm per pipe	1.8-4.4mm	-	U/C	None
	≤ Ø40mm per pipe	2.4-3.7mm	-	U/U	1 layer of 50mm wide soffit side
	≤ Ø110mm per pipe	2.5-10.0mm	-	U/C	2 layers of 50mm wide soffit side
	≤ Ø110mm per pipe	3.4-10.0mm	-	U/U	3 layers of 75mm wide soffit side
	≤ Ø125mm per pipe	3.9-11.4mm	-	U/C	4 layers of 50mm wide soffit side
	Ø 125mm per pipe	11.4mm	-	U/U	4 layers of 50mm wide soffit side
	Ø 140mm per pipe	8.0-12.4mm	-	U/U	6 layers of 75mm wide soffit side
	≤ Ø160mm per pipe	4.9-14.6mm	-	U/U	4 layers of 75mm wide soffit side
	≤ Ø160mm per pipe	3.9-4.8mm	-	U/U	10 layers of 75mm wide soffit side
	≤ Ø250mm per pipe	7.8mm	-	C/C	7 layers of 75mm wide soffit side

Type of Services	Size of Services	Pipe wall thicknesses	Pipe Insulation	Pipe config	Pipe Wraps
PP pipes	≤ Ø40mm per pipe	1.8-4.4mm	-	U/C	None
	≤ Ø40mm per pipe	1.8-5.5mm	-	U/U	1 layer of 50mm wide soffit side
	≤ Ø110mm per pipe	1.9-6.3mm	-	U/C	2 layers of 50mm wide soffit side
	≤ Ø110mm per pipe	3.7-10.5mm	-	U/U	4 layers of 50mm wide soffit side
	≤ Ø125mm per pipe	3.4-11.4mm	-	U/C	4 layers of 50mm wide soffit side
	Ø125mm per pipe	11.4mm	-	U/U	4 layers of 50mm wide soffit side
	Ø140mm per pipe	12.8mm	-	U/U	4 layers of 75mm wide soffit side
	≤ Ø160mm per pipe	4.9-14.6mm	-	U/C	6 layers of 50mm wide soffit side
	Ø160mm per pipe	14.6mm		U/U	4 layers of 75mm wide soffit side
	≤ Ø200mm per pipe	4.9-18.2mm		C/C	6 layers of 75mm wide soffit side
	Ø315mm per pipe	7.7mm		C/C	10 layers of 75mm wide soffit side
PEX pipe-in-pipes	≤ Ø25mm per pipe	-	-	C/C	None
	≤ Ø54mm per pipe	-	-	C/C	2 layers of 50mm wide soffit side
Aquatherm Green SDR9 pipes	Ø32mm per pipe	-	-	C/C	1 layer of 50mm wide soffit side
	≤ Ø110mm per pipe	-	-	C/C	2 layers of 50mm wide soffit side
Geberit Silent-PP pipes	≤ Ø50mm per pipe	-	-	U/U	2 layers of 50mm wide soffit side
	≤ Ø110mm per pipe	-	-	U/C	2 layers of 50mm wide soffit side
Polo-Kal NG pipes	≤ Ø110mm per pipe	-	-	U/C	2 layers of 50mm wide soffit side
	Ø125mm per pipe	-	-	U/C	4 layers of 50mm wide soffit side
	Ø160mm per pipe	-	-	U/C	6 layers of 50mm wide soffit side
Rehau Raupiano Plus pipes	≤ Ø50mm per pipe	-	-	U/U	2 layers of 50mm wide soffit side
	≤ Ø110mm per pipe	-	-	U/C	2 layers of 50mm wide soffit side
	Ø125mm per pipe	-	-	U/C	4 layers of 50mm wide soffit side
	Ø160mm per pipe	-	-	U/C	6 layers of 50mm wide soffit side

Type of Services	Size of Services	Pipe wall thicknesses	Pipe Insulation	Pipe config	Pipe Wraps
Wavin SiTech pipes	≤ Ø50mm per pipe	-	-	U/U	2 layers of 50mm wide soffit side
	≤ Ø110mm per pipe	-	-	U/C	2 layers of 50mm wide soffit side
Conduits of PVC-U & PVC-C pipes	≤ Ø110mm w/cables ≤ Ø14mm	2.7-6.6mm	-	U/C	2 layers of 50mm wide soffit side
Ventilation ducts	≤ Ø400mm	-	≥ 30mm thick x 15cm long stonewool mat ≥80kg/m^3 top side	-	Protecta FR Damper

INDEX

INDEX

INDEX

INDEX

INDEX

Appendix V – Apertures with mixed services

Protecta®

The best choice to protect against the spread of fire

www.protecta.com.tr • info@protecta.com.tr

EB YAPI EB İTH . TAAH. İNŞ. MALZ. SAN. TİC. LTD. ŞTİ

www.ebyapi.com

info@ebyapi.com

+90 (216) 515 55 80

Cevizli Mah. Zuhal Cad. Ritim İstanbul Plaza No.46 A5 Blok D:121, 34846 Maltepe / İstanbul

ASFP BMTRADA EOTA UL SINTEF

CERTIFICATION DE SERVICES ISO 9001 SGS UKAS PRODUCT CERTIFICATION

Supplier